NOTES
■ MINIMUM EXCAVATION SIZE: 11'-8" X 6'-7" DEPTH REQ'D.
■ FOR COMPLETE DESIGN AND PRODUCT INFORMATION CONTACT JENSEN PRECAST.

BILL OF MATERIALS

ITEM	QTY	PART NUMBER	DESCRIPTION
1	1	200026634	Tank JP 1500 Gallon 6 Inch Rect. Bottom Section Single Baffle
2	1	200014201	Tank JP 1500 Gallon x 8 Slab Top 24 ECE
3	1	200026715	Vertical Slab Baffle JP 1500
4	3	100013648	SEALANT JOINT BUTYL RUBBER ASTM C-990 AND M198 CS-102 1IN EQUIV X14.5FT PER ROLL

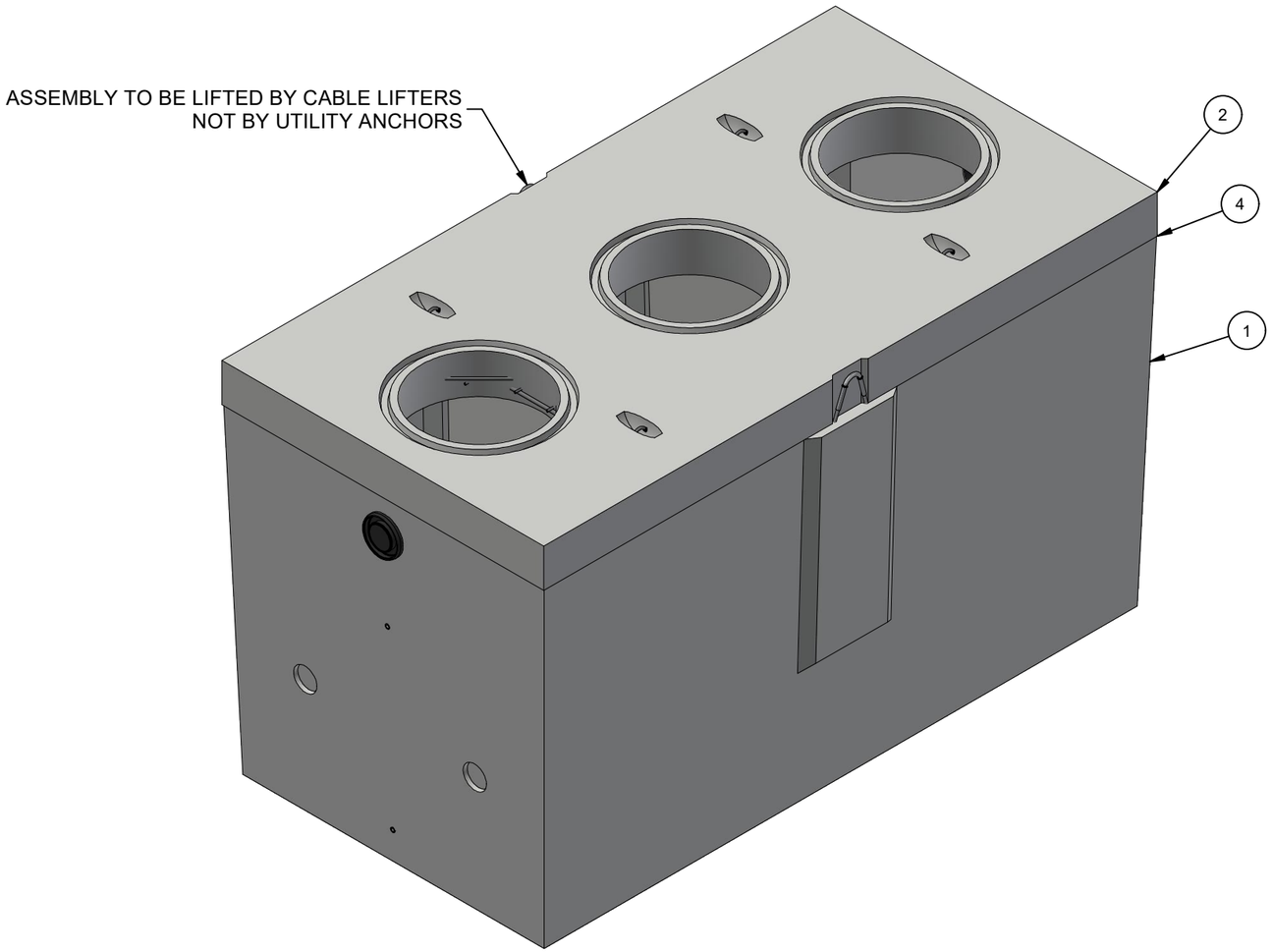

ISO LAYOUT

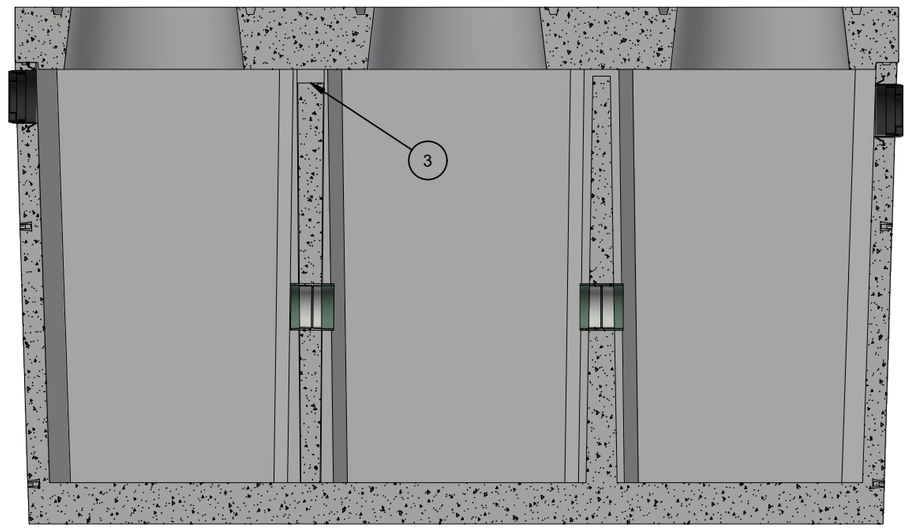

SECTION

200030727.idw

LIFTING NOTES
■ THIS CONCRETE PRODUCT IS DESIGNED TO BE LIFTED AT 2500 PSI WITH 2 LIFT CONNECTIONS EQUALLY LOADED TO 2 LIFTING POINTS AT A MINIMUM 90° SLING ANGLE, MEASURED FROM HORIZONTAL.

BURY DEPTH:	1.1' - 6.0' to Top of Top Slab		
WATER LEVEL:	Below Structure	WEIGHT:	18063.8 Lbs
DESIGN SPEC:	ASTM C890,ACI 318	LOADING SPEC:	A-16 (AASHTO HS20-44)
REINFORCEMENT TYPE:		LIFTING TYPE:	Cable

JENSEN PRECAST EST. 1968

WWW.JENSENPRECAST.COM

©2018 Jensen Precast- All rights reserved.
All materials appearing as Jensen Precast documents and the like are proprietary work product and are protected under U.S. copyright and other laws.
Unless in conjunction with business conducted with Jensen Precast, any use of Jensen Precast work product without express, written consent is prohibited, and recipient is prohibited from distributing any and all work product to non-approved third parties under penalty of civil action.

REVISION HISTORY			
REV	DESCRIPTION	DATE	BY
A	DRAWING CREATED	10/11/2019	T.Larson
B	TOP SLAB LIFTING UPDATED AND GROOVE ADDED	2/9/2021	T.Larson

DESCRIPTION: Tank JP 1500 Gallon 6 Inch Assembly ECE Double Baffle LAYOUT REVIEW				REV: B-1
PART NUMBER:	200030727	DRAWN BY:	T.Larson	SHEET: 1 OF 1
CREATED:	1/31/2019	MODIFIED:	2/9/2021	