| NOTES |
|---|
| ■ IN COMPLIANCE WITH STRUCTURAL LOADING REQUIREMENTS OF ASTM INTERNATIONAL |
| ■ MUST BE INSTALLED PER "JENSEN PRECAST UNDERGROUND WASTEWATER PRECAST CONCRETE TANK INSTALLATION PROCEDURE" WHICH CAN BE FOUND AT https://www.jensenprecast.com/Tank-Installation-Procedure-d2106.pdf. THIS PROCEDURE ADDRESSES REQUIRED EXCAVATION, SITE PREPARATION, INSTALLATION, VENTILATION, AND WATER/VACCUM TESTING |

## BILL OF MATERIALS

| ITEM | QTY | PART NUMBER | DESCRIPTION | WEIGHT (LBS) |
|---|---|---|---|---|
| 1 | 1 | 200026065 | Tank JP 2000 Gallon 6 Inch Assembly EE No Baffle | 18811 |
| 2 | JOB SPECIFIC | 100005850 | CI RINGCOVER 24DIA B-5105-02/B-5105-R2 ASTM A48 CL35B CP O-RING GASKET OSI JENSEN/INTERCEPT | 196 |
| 3 | JOB SPECIFIC | 100001524 | Grade Ring D2432x3 | 87 |
| 4 | JOB SPECIFIC | 100001525 | Grade Ring D2432x6 | 180 |
| 5 | JOB SPECIFIC | 100001526 | Grade Ring D2432x12 | 365 |
| 6 | JOB SPECIFIC | 100012046 | Plug Cover D2428x6 Slab Top | 300 |

200030533.idw

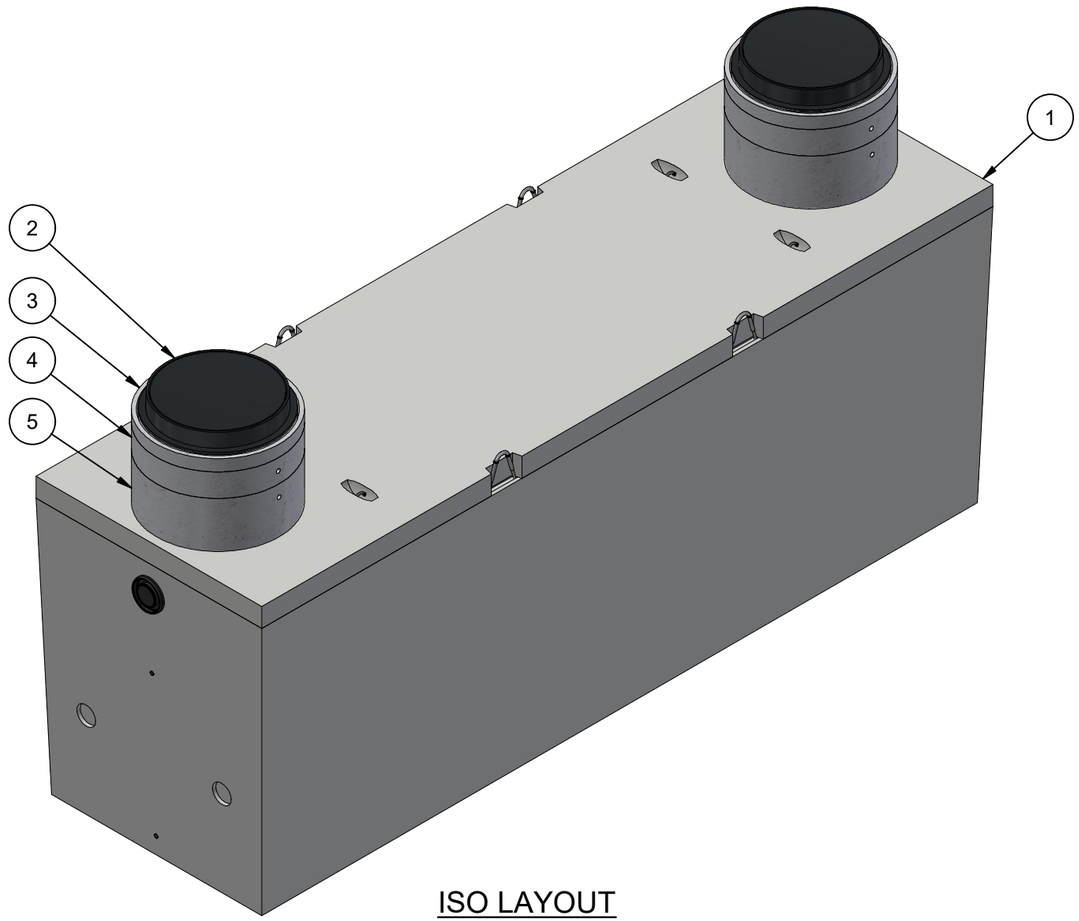


ISO LAYOUT

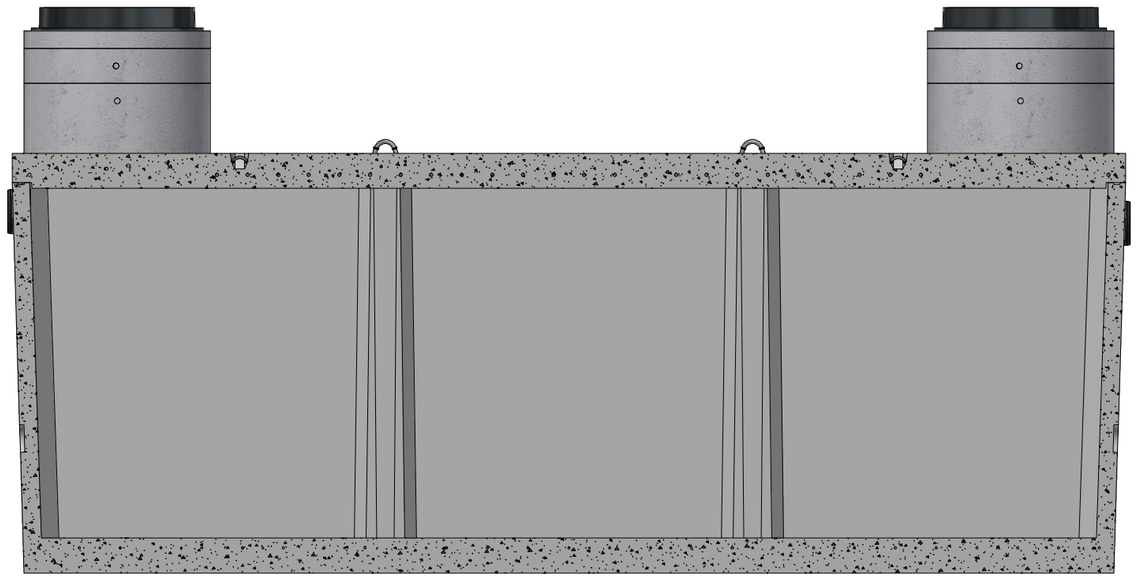

SECTION

| REVISION HISTORY | | | |
|---|---|---|---|
| REV | DESCRIPTION | DATE | BY |
| A | DRAWING CREATED | 10/8/2019 | T.Larson |
| B | BASE LIFTING UPDATED; TOP SLAB NOTCHES & REBAR UPDATED | 4/27/2020 | T.Larson |
| C | TOP SLAB LIFTING UPDATED AND GROOVE ADDED | 2/8/2021 | T.Larson |
| D | UPDATED ACCESSORIES | 7/6/2022 | E.FINE |

| | | | |
|---|---|---|---|
| BURY DEPTH: | 1.1' - 6.0' to Top | | |
| WATER LEVEL: | Below Structure | WEIGHT: | 20767 Lbs |
| DESIGN SPEC: | ASTM C890,ACI 318 | LOADING SPEC: | A-16 (AASHTO HS20-44) |
| REINFORCEMENT TYPE: | | LIFTING TYPE: | |

JENSEN PRECAST EST. 1968

WWW.JENSENPRECAST.COM

©2018 Jensen Precast- All rights reserved.
All materials appearing as Jensen Precast documents and the like are proprietary work product and are protected under U.S. copyright and other laws.
Unless in conjunction with business conducted with Jensen Precast, any use of Jensen Precast work product without express, written consent is prohibited, and recipient is prohibited from distributing any and all work product to non-approved third parties under penalty of civil action.

| | | | |
|---|---|---|---|
| DESCRIPTION: | Tank JP 2000 Gallon 6 Inch Layout Holding Tank 24"E, 24"E No Baffle<br>LAYOUT REVIEW | | REV: D-3 |
| PART NUMBER: | 200030533 | DRAWN BY: | E. Fine |
| CREATED: | 1/31/2019 | MODIFIED: | 7/6/2022 |
| | | | SHEET: 1 OF 2 |

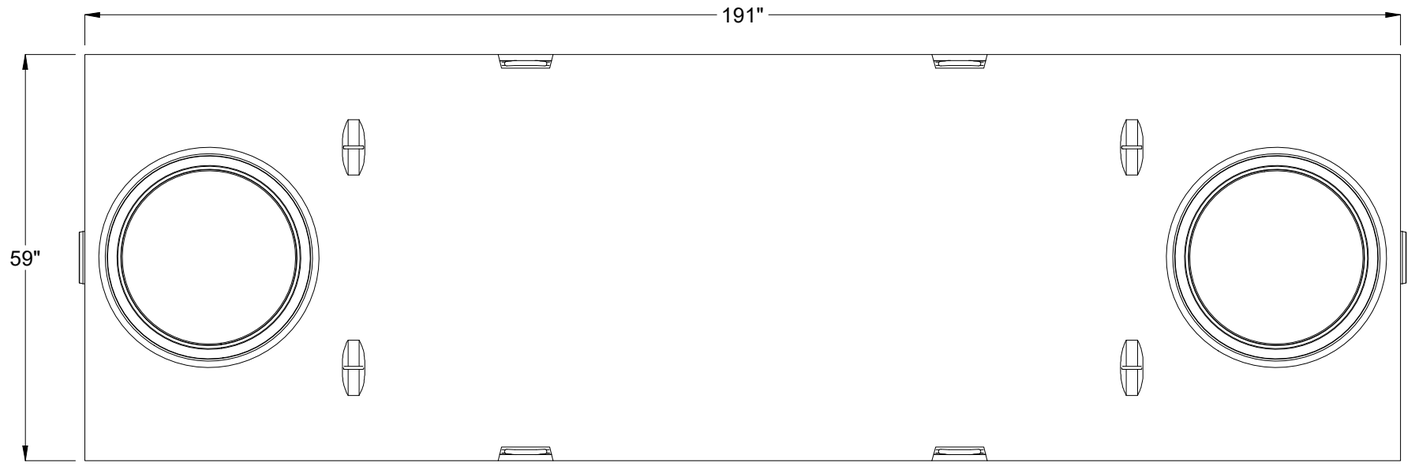


PLAN VIEW

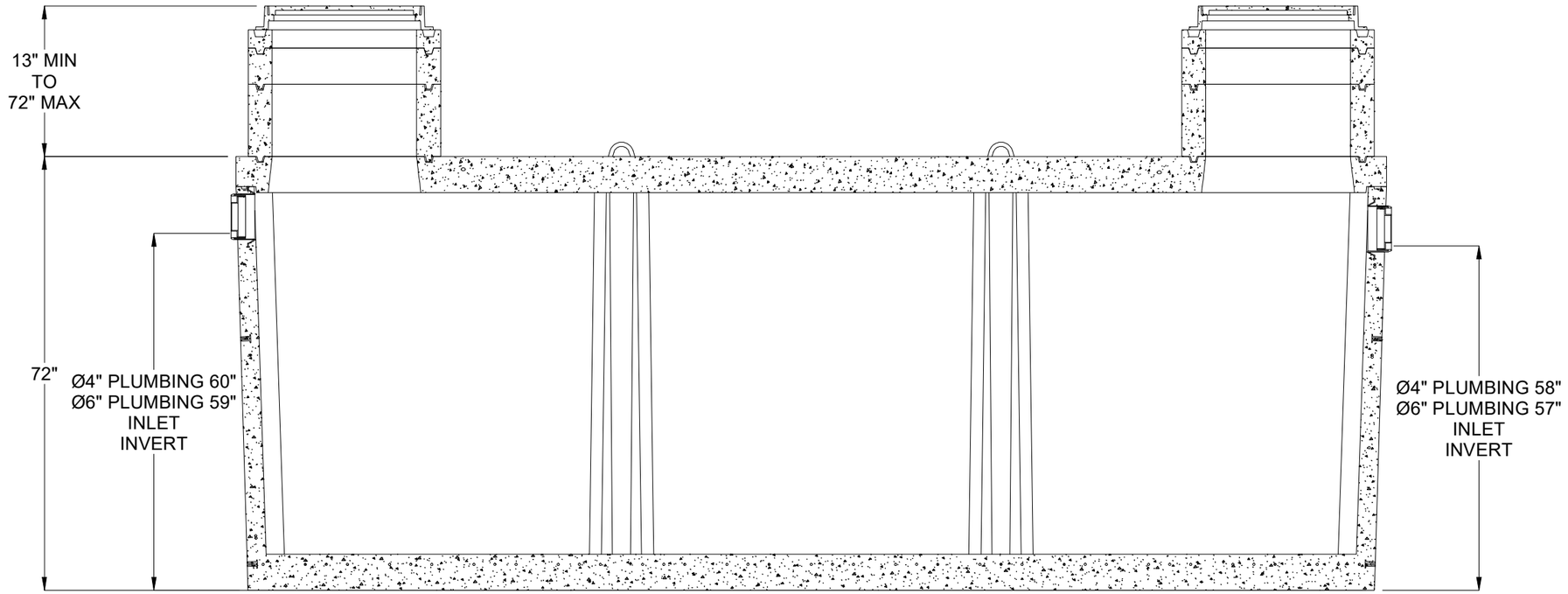


CROSS SECTION

| | | | |
|---|---|---|---|
| BURY DEPTH: | 1.1' - 6.0' to Top | | |
| WATER LEVEL: | Below Structure | WEIGHT: | 20767 Lbs |
| DESIGN SPEC: | ASTM C890,ACI 318 | LOADING SPEC: | A-16 (AASHTO HS20-44) |
| REINFORCEMENT TYPE: | | LIFTING TYPE: | |

JENSEN PRECAST EST. 1968

WWW.JENSENPRECAST.COM

©2018 Jensen Precast- All rights reserved.
All materials appearing as Jensen Precast documents and the like are proprietary work product and are protected under U.S. copyright and other laws.
Unless in conjunction with business conducted with Jensen Precast, any use of Jensen Precast work product without express, written consent is prohibited, and recipient is prohibited from distributing any and all work product to non-approved third parties under penalty of civil action.

| | | | |
|---|---|---|---|
| DESCRIPTION: | Tank JP 2000 Gallon 6 Inch Layout Holding Tank 24"E, 24"E No Baffle LAYOUT DRAWING | | REV: D-3 |
| PART NUMBER: | 200030533 | DRAWN BY: | E. Fine |
| CREATED: | 1/31/2019 | MODIFIED: | 7/6/2022 |
| | | | SHEET: 2 OF 2 |

200030533.idw