NOTES
■ FOR COMPLETE DESIGN AND PRODUCT INFORMATION CONTACT JENSEN PRECAST.

BILL OF MATERIALS

ITEM	UNIT QTY	QTY	PART NUMBER	DESCRIPTION
1	37.383 ft^3	37.383 ft^3	100011425	CONCRETE MIX GENERIC 5000 PSI
2	40.000 in	160.000 in	100024617	STRUT C-CHANNEL CONCRETE INSERT 1-5/8 X 1-3/8 12GA W/ANCHORS GALV
3	1	1	300122938	REINFORCING MAT 300122938
4	1	16	100003019	TERMINATOR DUCT WITH SEAL 6IN T6000
5	1	1	300122959	REINFORCING MAT 300122959
6	1	8	100002867	ANCHOR DOGBONE P52 2T X 3-3/8" GALV
7	1	32	100003015	TERMINATOR DUCT WITH SEAL 4.5IN T4501
8	1	4	100004660	PULL IRON OFFSET B783519 3.5H X 19L X.875DIA GALV

200030515.idw

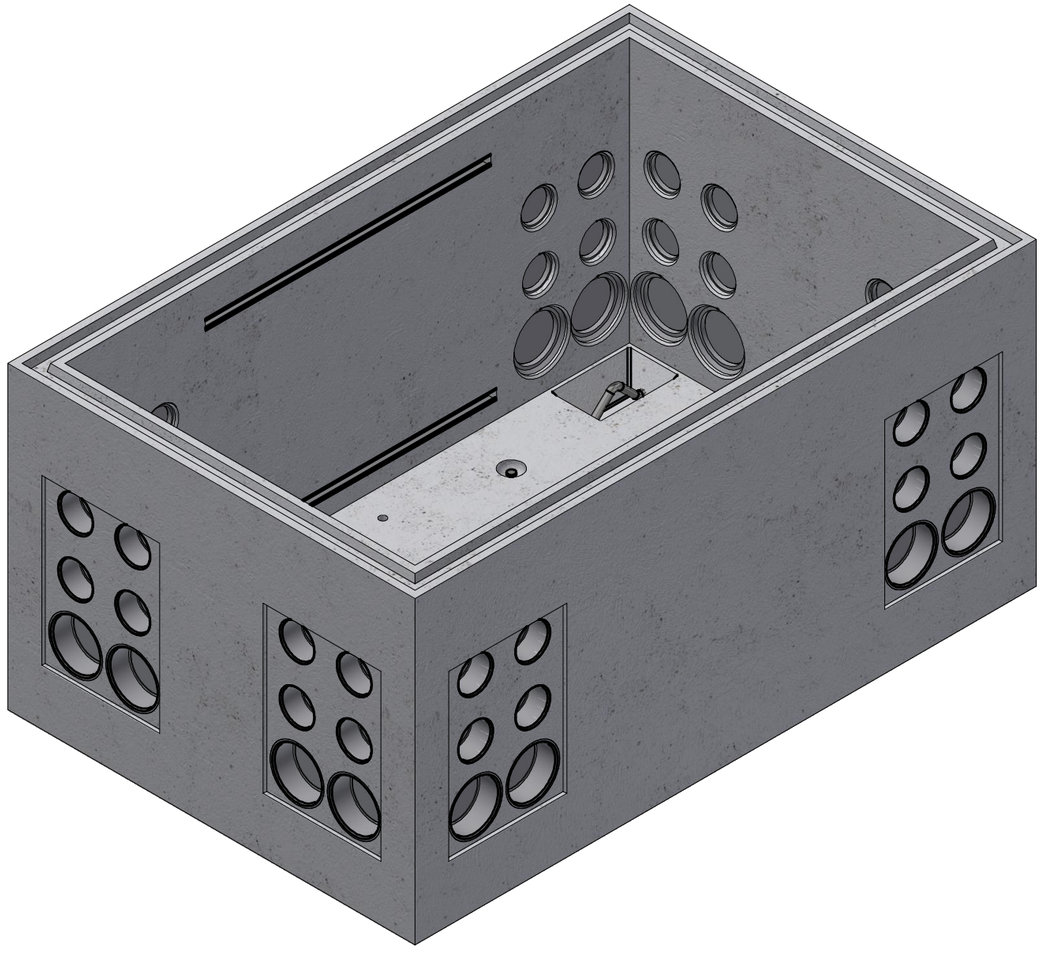

ISOMETRIC VIEW

LIFTING NOTES
■ THIS CONCRETE PRODUCT IS DESIGNED TO BE LIFTED AT 2500PSI WITH 4 LIFT CONNECTIONS EQUALLY LOADED TO 4 LIFTING POINTS AT A MINIMUM 60° SLING ANGLE, MEASURED FROM HORIZONTAL.

BURY DEPTH:	3.0' - 6.0' to Inside Floor		
WATER LEVEL:	4.0'	WEIGHT:	5896.34 Lbs
DESIGN SPEC:	ASTM C857,ACI 318	LOADING SPEC:	A-16 (AASHTO HS20-44)
REINFORCEMENT TYPE:	Rebar	LIFTING TYPE:	Dogbone

JENSEN PRECAST EST. 1968

WWW.JENSENPRECAST.COM

©2019 Jensen Precast- All rights reserved.
All materials appearing as Jensen Precast documents and the like are proprietary work product and are protected under U.S. copyright and other laws.
Unless in conjunction with business conducted with Jensen Precast, any use of Jensen Precast work product without express, written consent is prohibited, and recipient is prohibited from distributing any and all work product to non-approved third parties under penalty of civil action.

REVISION HISTORY			
REV	DESCRIPTION	DATE	BY
A	INITIAL RELEASE		

DESCRIPTION:	Pull Box 4878x36 Rect. Bottom Section Terminators Sump Roseville Electric CASTING LAYOUT		REV: C-1
PART NUMBER:	200030515	DRAWN BY: A. Sprung	SHEET: 1 OF 2
CREATED:	10/3/2019	MODIFIED: 10/17/2019	

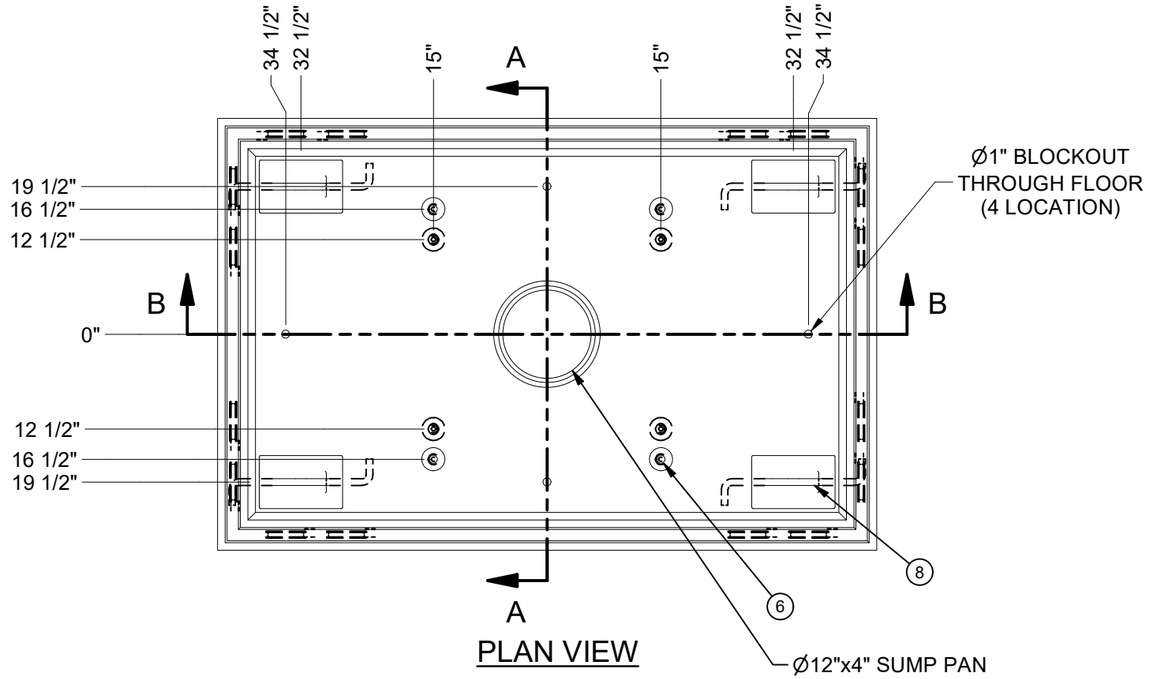

PLAN VIEW

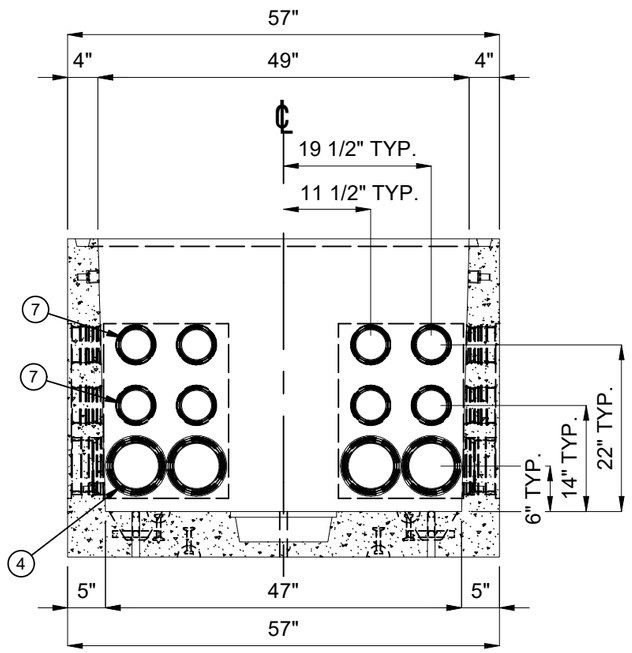

SECTION A-A

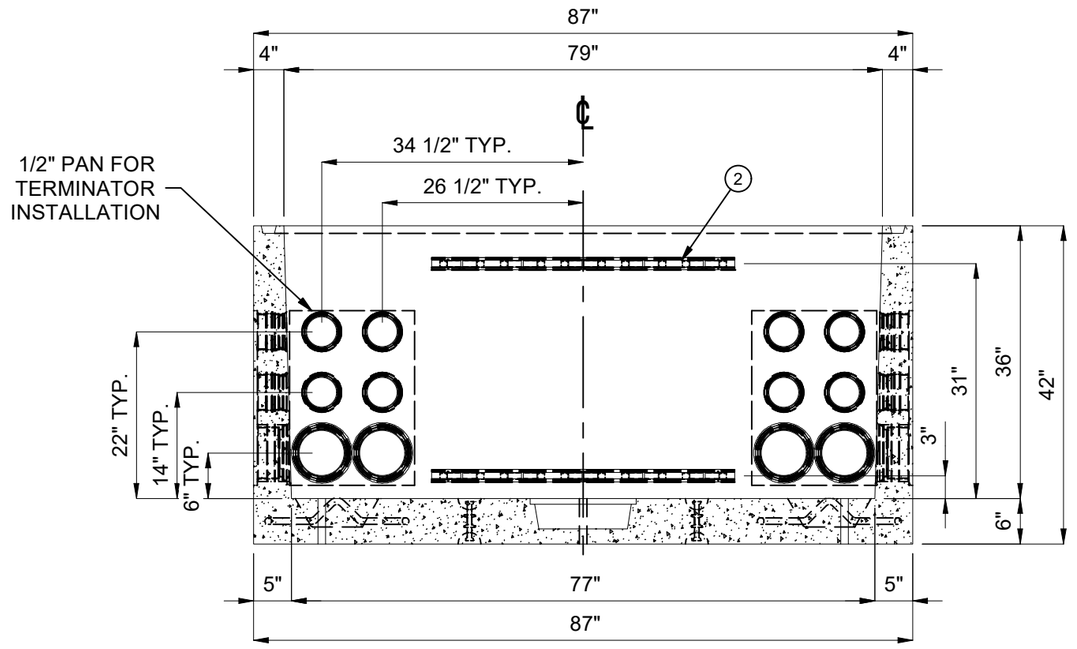

SECTION B-B

BURY DEPTH:	3.0' - 6.0' to Inside Floor		
WATER LEVEL:	4.0'	WEIGHT:	5896.34 Lbs
DESIGN SPEC:	ASTM C857,ACI 318	LOADING SPEC:	A-16 (AASHTO HS20-44)
REINFORCEMENT TYPE:	Rebar	LIFTING TYPE:	Dogbone

JENSEN PRECAST EST. 1968

WWW.JENSENPRECAST.COM

©2019 Jensen Precast- All rights reserved.
All materials appearing as Jensen Precast documents and the like are proprietary work product and are protected under U.S. copyright and other laws.
Unless in conjunction with business conducted with Jensen Precast, any use of Jensen Precast work product without express, written consent is prohibited, and recipient is prohibited from distributing any and all work product to non-approved third parties under penalty of civil action.

DESCRIPTION:	Pull Box 4878x36 Rect. Bottom Section Terminators Sump Roseville Electric CASTING DRAWING		REV: C-1
PART NUMBER:	200030515	DRAWN BY:	A. Sprung
CREATED:	10/3/2019	MODIFIED:	10/17/2019
			SHEET: 2 OF 2

200030515.idw