NOTES
■ STRUCTURAL DESIGN IS BASED ON 6000 LB EQUIPMENT LOADING.
■ FOR COMPLETE DESIGN AND PRODUCT INFORMATION CONTACT JENSEN PRECAST.

BILL OF MATERIALS

ITEM	UNIT QTY	QTY	PART NUMBER	DESCRIPTION	MASS (lbs)
1	16.614 ft^3	16.614 ft^3	100005976	CONCRETE MIX GENERIC 4500 PSI	2496.88
2	5.0000 in	10.0000 in	100003042	STRUT C-CHANNEL 1-5/8 X 1-5/8 12GA SOLID GALV	.82
4	1	4	100002867	ANCHOR DOGBONE P52 2T X 3-3/8" GALV	2.31
3	1	1	300122928	REINFORCING MAT 300122928	.01

200030512.idw

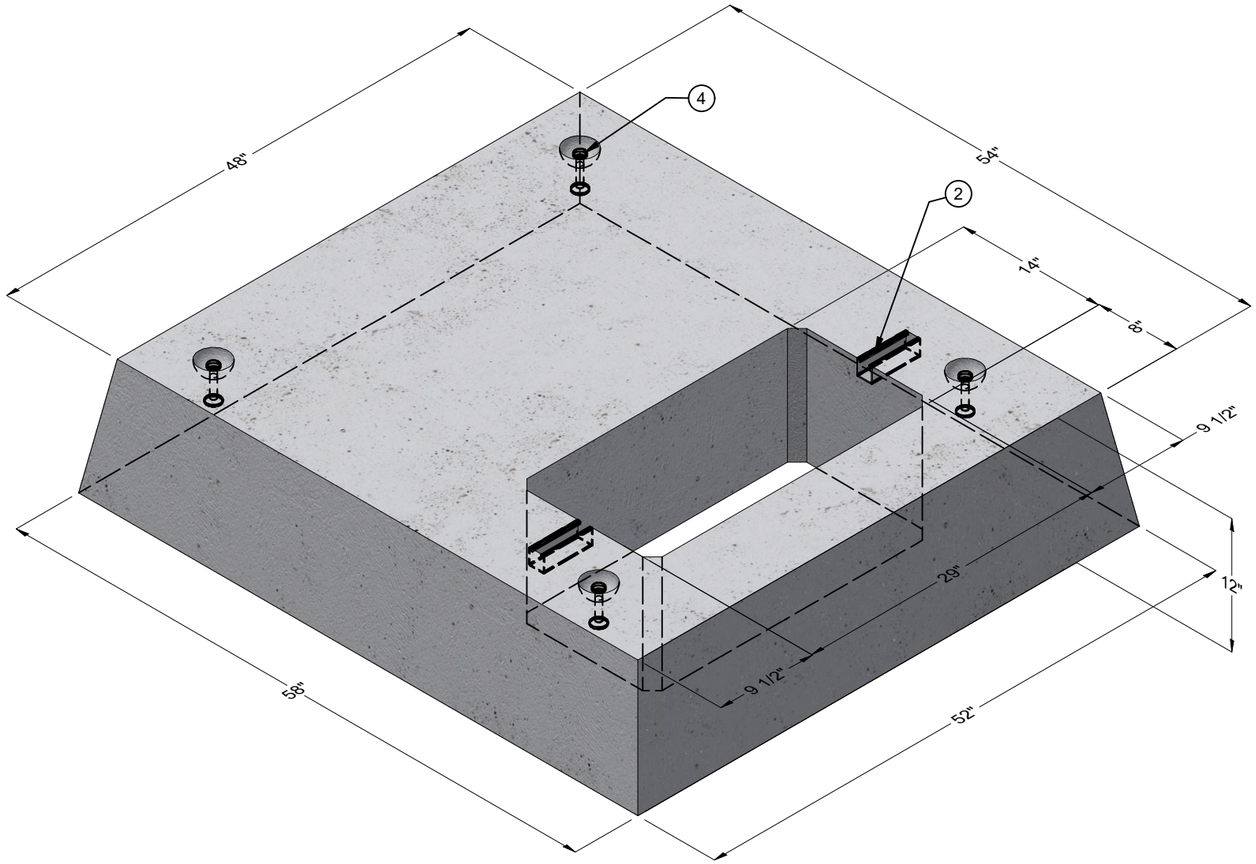

ISO REF

LIFTING NOTES
■ THIS CONCRETE PRODUCT IS DESIGNED TO BE LIFTED AT 3500 PSI WITH 4 LIFT CONNECTIONS EQUALLY LOADED TO 4 LIFTING POINTS AT A MINIMUM 75° SLING ANGLE, MEASURED FROM HORIZONTAL.

BURY DEPTH:	0.0' - 0.0' to Top of Section		
WATER LEVEL:	Below Structure	WEIGHT:	2507.75 Lbs
DESIGN SPEC:	ASTM C857	LOADING SPEC:	Agency Specified
REINFORCEMENT TYPE:	Rebar	LIFTING TYPE:	Dogbone

JENSEN PRECAST EST. 1968

WWW.JENSENPRECAST.COM

©2019 Jensen Precast- All rights reserved.
All materials appearing as Jensen Precast documents and the like are proprietary work product and are protected under U.S. copyright and other laws.
Unless in conjunction with business conducted with Jensen Precast, any use of Jensen Precast work product without express, written consent is prohibited, and recipient is prohibited from distributing any and all work product to non-approved third parties under penalty of civil action.

REVISION HISTORY

REV	DESCRIPTION	DATE	BY
A	INITIAL RELEASE	10/8/2019	L. Fuller

DESCRIPTION:	Pad 4854x12 Roseville Power CASTING LAYOUT	REV:	A
PART NUMBER:	200030512	DRAWN BY:	L. Fuller
CREATED:	9/4/2019	MODIFIED:	10/9/2019
		SHEET:	1 OF 2

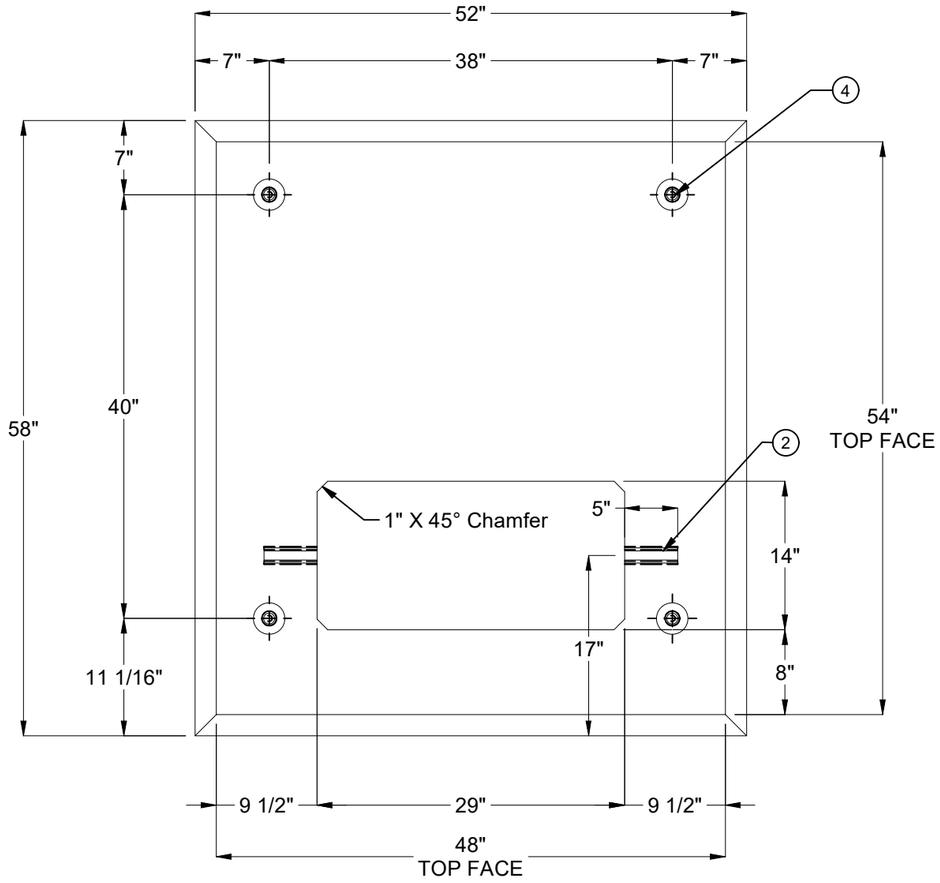

PLAN VIEW



ELEVATION

BURY DEPTH:	0.0' - 0.0' to Top of Section		
WATER LEVEL:	Below Structure	WEIGHT:	2507.75 Lbs
DESIGN SPEC:	ASTM C857	LOADING SPEC:	Agency Specified
REINFORCEMENT TYPE:	Rebar	LIFTING TYPE:	Dogbone

JENSEN PRECAST EST. 1968

WWW.JENSENPRECAST.COM

©2019 Jensen Precast- All rights reserved.
All materials appearing as Jensen Precast documents and the like are proprietary work product and are protected under U.S. copyright and other laws.
Unless in conjunction with business conducted with Jensen Precast, any use of Jensen Precast work product without express, written consent is prohibited, and recipient is prohibited from distributing any and all work product to non-approved third parties under penalty of civil action.

DESCRIPTION:	Pad 4854x12 Roseville Power CASTING DRAWING		REV: A
PART NUMBER:	200030512	DRAWN BY:	L. Fuller
CREATED:	9/4/2019	MODIFIED:	10/9/2019
			SHEET: 2 OF 2

200030512.idw