NOTES
■ MINIMUM EXCAVATION SIZE: 14'-0" X 7'-9" DEPTH REQ'D.
■ FOR COMPLETE DESIGN AND PRODUCT INFORMATION CONTACT JENSEN PRECAST.

BILL OF MATERIALS

ITEM	QTY	PART NUMBER	DESCRIPTION
1	108.141 ft^3	100011425	CONCRETE MIX GENERIC 5000 PSI
2	2	100007338	CONNECTOR BOOT 3005-CE TYPE VI CAST-IN-SEAL ASTM C923/C1644 CLOSED HOLE-4-6 4.52-6.64
3	2	100026190	ANCHOR CABLE LOOP LIFT SEPTIC 1/2 X 51 500-5100
4	1	300122700	REINFORCING MAT 300122700

200029625.idw

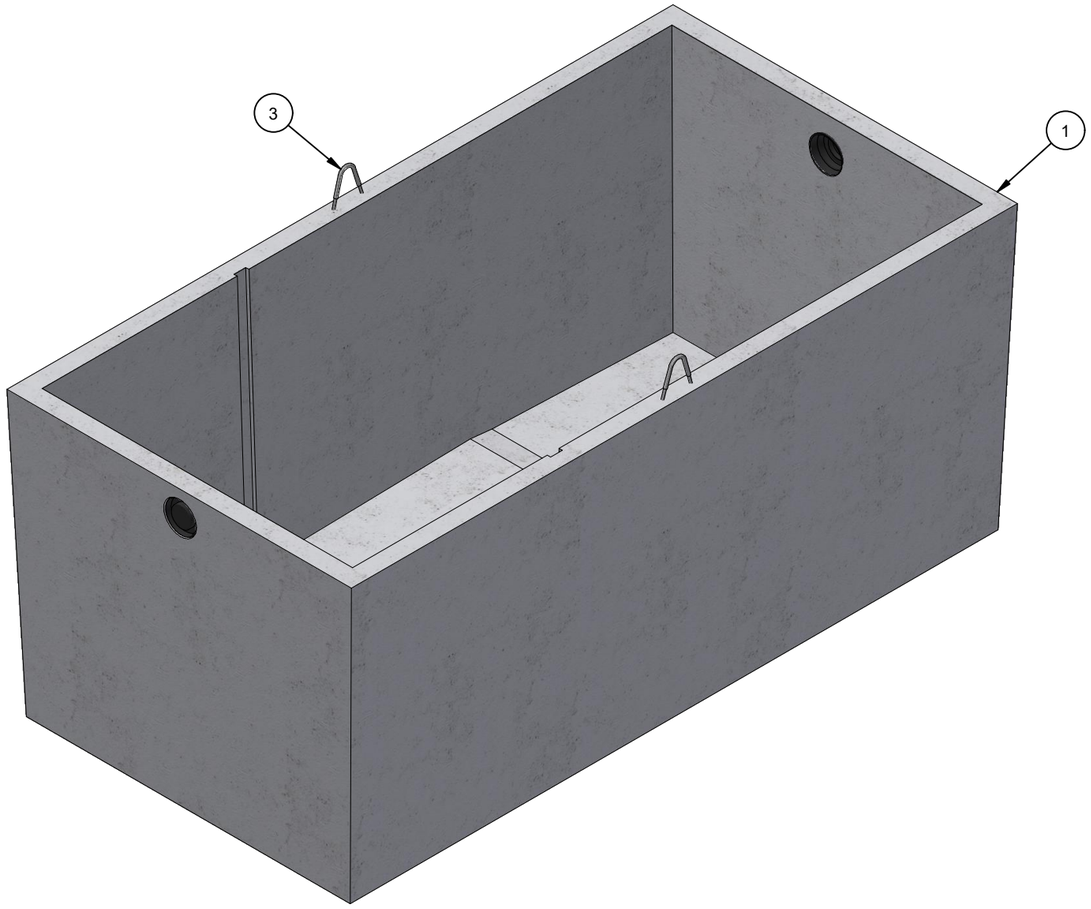

ISO LAYOUT

LIFTING NOTES
■ THIS CONCRETE PRODUCT IS DESIGNED TO BE LIFTED AT 2500 PSI WITH 2 LIFT CONNECTIONS EQUALLY LOADED TO 2 LIFTING POINTS AT A MINIMUM 90° SLING ANGLE, MEASURED FROM HORIZONTAL.

REVISION HISTORY			
REV	DESCRIPTION	DATE	BY
A	DRAWING CREATED	9/20/2019	J HILLMAN
B	ADJUST HEIGHT, UPDATE REBAR	12/6/2019	J HILLMAN

BURY DEPTH:	5.0' - 11.8' to Inside Floor		
WATER LEVEL:	Below Structure	WEIGHT:	16266.77 Lbs
DESIGN SPEC:	ASTM C890,ACI 318	LOADING SPEC:	A-16 (AASHTO HS20-44)
REINFORCEMENT TYPE:	Rebar	LIFTING TYPE:	Cable

JENSEN PRECAST EST. 1968

WWW.JENSENPRECAST.COM

©2019 Jensen Precast- All rights reserved.
All materials appearing as Jensen Precast documents and the like are proprietary work product and are protected under U.S. copyright and other laws.
Unless in conjunction with business conducted with Jensen Precast, any use of Jensen Precast work product without express, written consent is prohibited, and recipient is prohibited from distributing any and all work product to non-approved third parties under penalty of civil action.

DESCRIPTION:	Tank PJP 2000 Gallon 6 Inch Rect. Bottom Section No Baffle CASTING LAYOUT		REV: B
PART NUMBER:	200029625	DRAWN BY:	N.Evans
CREATED:	9/20/2019	MODIFIED:	9/2/2021
			SHEET: 1 OF 3

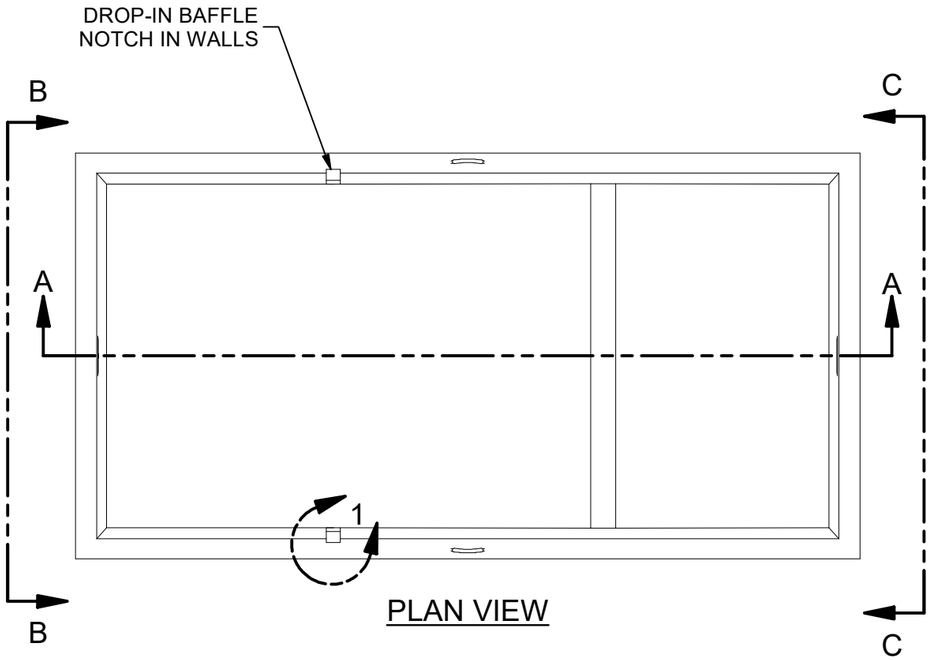

PLAN VIEW

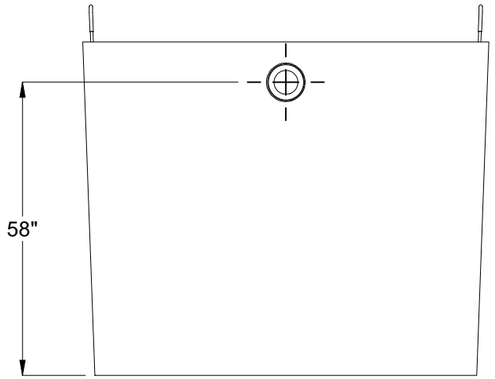

VIEW C-C

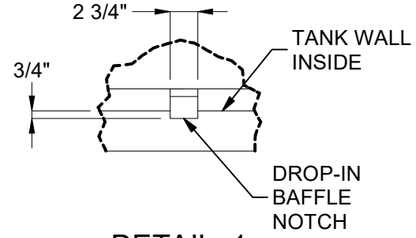

DETAIL 1

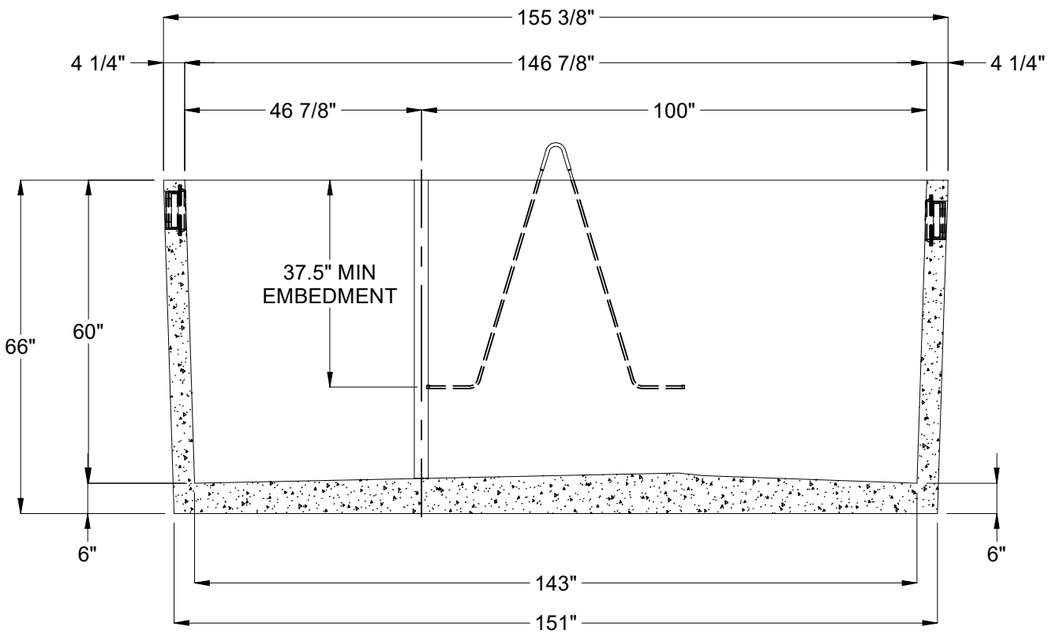

SECTION A-A

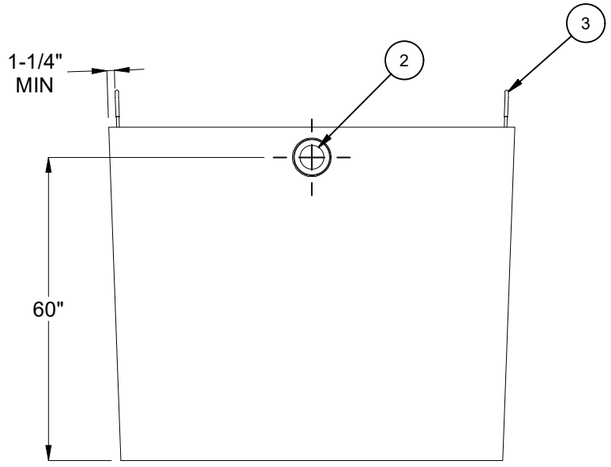

VIEW B-B

BURY DEPTH:	5.0' - 11.8' to Inside Floor		
WATER LEVEL:	Below Structure	WEIGHT:	16266.77 Lbs
DESIGN SPEC:	ASTM C890,ACI 318	LOADING SPEC:	A-16 (AASHTO HS20-44)
REINFORCEMENT TYPE:	Rebar	LIFTING TYPE:	Cable

JENSEN PRECAST EST. 1968

WWW.JENSENPRECAST.COM

©2019 Jensen Precast- All rights reserved.
All materials appearing as Jensen Precast documents and the like are proprietary work product and are protected under U.S. copyright and other laws.
Unless in conjunction with business conducted with Jensen Precast, any use of Jensen Precast work product without express, written consent is prohibited, and recipient is prohibited from distributing any and all work product to non-approved third parties under penalty of civil action.

DESCRIPTION:	Tank PJP 2000 Gallon 6 Inch Rect. Bottom Section No Baffle CASTING DRAWING		REV: B
PART NUMBER:	200029625	DRAWN BY:	N.Evans
CREATED:	9/20/2019	MODIFIED:	9/2/2021

SHEET: 2 OF 3

200029625.idw

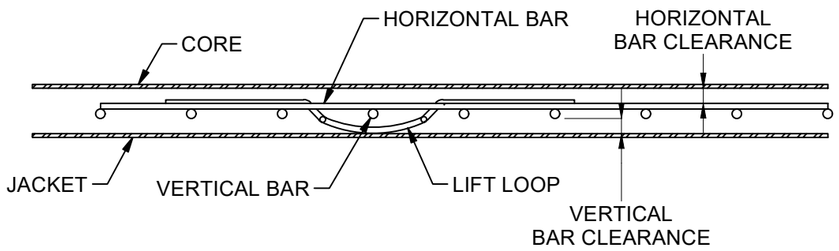

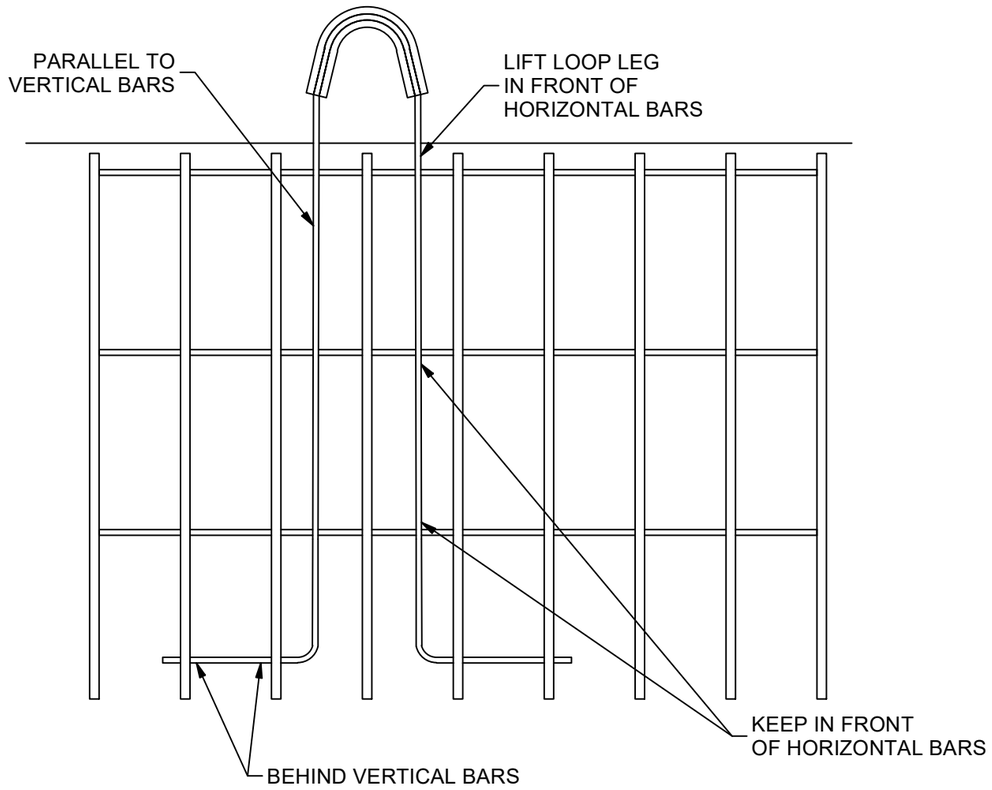

FOR USE WITH THIN WALL PROP CANTILEVER
TANKS WHERE SPECIFIED ON SHOP DRAWING.

BURY DEPTH: to		JENSEN PRECAST EST. 1968 WWW.JENSENPRECAST.COM	©2019 Jensen Precast- All rights reserved. All materials appearing as Jensen Precast documents and the like are proprietary work product and are protected under U.S. copyright and other laws. Unless in conjunction with business conducted with Jensen Precast, any use of Jensen Precast work product without express, written consent is prohibited, and recipient is prohibited from distributing any and all work product to non-approved third parties under penalty of civil action.	DESCRIPTION: CABLE LOOP INSTALLATION DETAIL	REV: B
WATER LEVEL:	WEIGHT: Lbs			PART NUMBER: / DRAWN BY: N.Evans	SHEET: 3 OF 3
DESIGN SPEC:	LOADING SPEC:			CREATED: / MODIFIED: 9/2/2021	
REINFORCEMENT TYPE:	LIFTING TYPE:				

200029625.idw