NOTES

- FOR COMPLETE DESIGN AND PRODUCT INFORMATION CONTACT JENSEN PRECAST.

BILL OF MATERIALS

ITEM	QTY	PART NUMBER	DESCRIPTION
1	34.456 ft^3	100002728	CONCRETE MIX GENERIC 4000 PSI
2	8	100002393	REINF HOOP STEEL .309DIA GA ASTM A-1064 67.5DIA
3	2	100002854	INSERT MH RUNG PLASTIC SP SOCKET

ALTERNATE REINFORCING OPTIONS

PART NUMBER	DESCRIPTION
200042452	BAR REINFORCING CAGE 200042452
200042453	MBK WIRE REINFORCING CAGE 200042453
200029506	WIRE MESH REINFORCING CAGE 200029506

200029505.idw



ISOMETRIC VIEW

LIFTING NOTES

- THIS CONCRETE PRODUCT IS DESIGNED TO BE LIFTED AT 2500 PSI WITH 2 LIFT CONNECTIONS EQUALLY LOADED TO 2 LIFTING POINTS AT A MINIMUM 45°, MAXIMUM 90° SLING ANGLE, MEASURED FROM HORIZONTAL.

BURY DEPTH:	0.0' - 99.0' to Top		
WATER LEVEL:	0.0'	WEIGHT:	5214.32 Lbs
DESIGN SPEC:	ASTM C478	LOADING SPEC:	A-16 (AASHTO HS20-44)
REINFORCEMENT TYPE:	Plain Wire	LIFTING TYPE:	SP Socket

JENSEN PRECAST EST. 1968

WWW.JENSENPRECAST.COM

©2019 Jensen Precast- All rights reserved.
All materials appearing as Jensen Precast documents and the like are proprietary work product and are protected under U.S. copyright and other laws.
Unless in conjunction with business conducted with Jensen Precast, any use of Jensen Precast work product without express, written consent is prohibited, and recipient is prohibited from distributing any and all work product to non-approved third parties under penalty of civil action.

REVISION HISTORY

REV	DESCRIPTION	DATE	BY
A	INITIAL RELEASE	04/03/2019	
B	ADDED ALTERNATE REINFORCING OPTIONS	08/20/2020	VGL
C	CHANGED LIFTING TO SP SOCKETS	08/12/2021	VGL

DESCRIPTION:	Manhole D6072x48 Barrel TU CASTING LAYOUT		REV: C-1
PART NUMBER:	200029505	DRAWN BY:	V. Lund
CREATED:	4/3/2019	MODIFIED:	8/12/2021
			SHEET: 1 OF 2

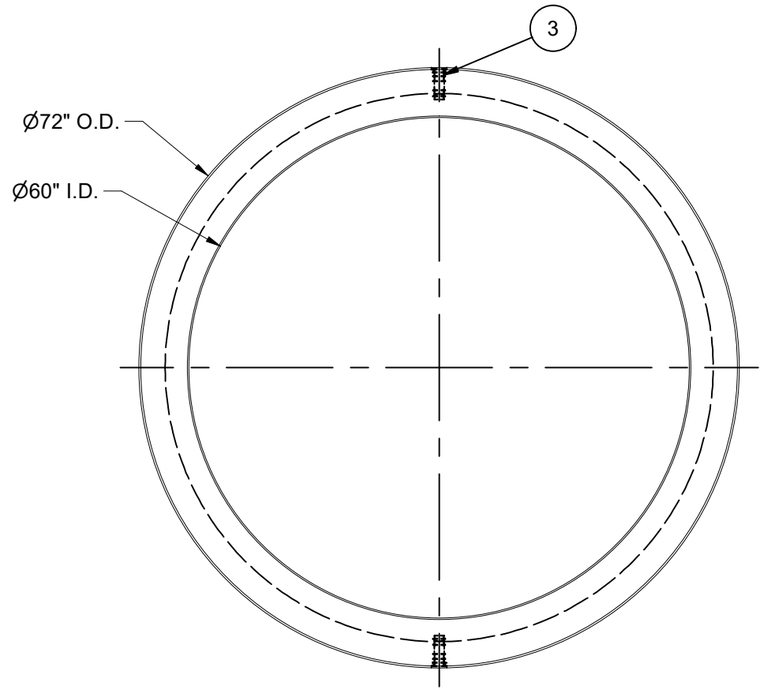

PLAN VIEW

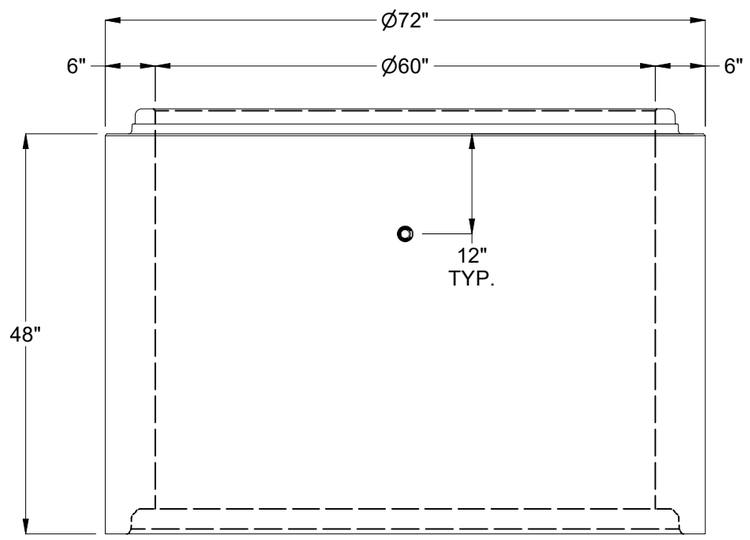

ELEVATION

BURY DEPTH:	0.0' - 99.0' to Top		
WATER LEVEL:	0.0'	WEIGHT:	5214.32 Lbs
DESIGN SPEC:	ASTM C478	LOADING SPEC:	A-16 (AASHTO HS20-44)
REINFORCEMENT TYPE:	Plain Wire	LIFTING TYPE:	SP Socket

JENSEN PRECAST EST. 1968

WWW.JENSENPRECAST.COM

©2019 Jensen Precast- All rights reserved.
All materials appearing as Jensen Precast documents and the like are proprietary work product and are protected under U.S. copyright and other laws.
Unless in conjunction with business conducted with Jensen Precast, any use of Jensen Precast work product without express, written consent is prohibited, and recipient is prohibited from distributing any and all work product to non-approved third parties under penalty of civil action.

DESCRIPTION:	Manhole D6072x48 Barrel TU CASTING DRAWING		REV: C-1
PART NUMBER:	200029505	DRAWN BY:	V. Lund
CREATED:	4/3/2019	MODIFIED:	8/12/2021
			SHEET: 2 OF 2

200029505.idw