NOTES
■ MINIMUM EXCAVATION SIZE: 14'-0" X 7'-9" DEPTH REQ'D.
■ FOR COMPLETE DESIGN AND PRODUCT INFORMATION CONTACT JENSEN PRECAST.

BILL OF MATERIALS

ITEM	QTY	PART NUMBER	DESCRIPTION
1	128.172 ft^3	100011425	CONCRETE MIX GENERIC 5000 PSI
2	2	100024698	CONNECTOR BOOT 402.0450 CAST-A-SEAL ASTM C923/C1644 4.2-4.7 PIPE OD 2.5-6 WALL THICK
3	1	100002704	FITTING PVC SDR35 4IN DIA COUPLING ASTM D-3034 SOLVENT WELD SEWER DRAIN
4	2	100026190	ANCHOR CABLE LOOP LIFT SEPTIC 1/2 X 51 500-5100
5	1	300121222	REINFORCING MAT 300121222

200029422.idw

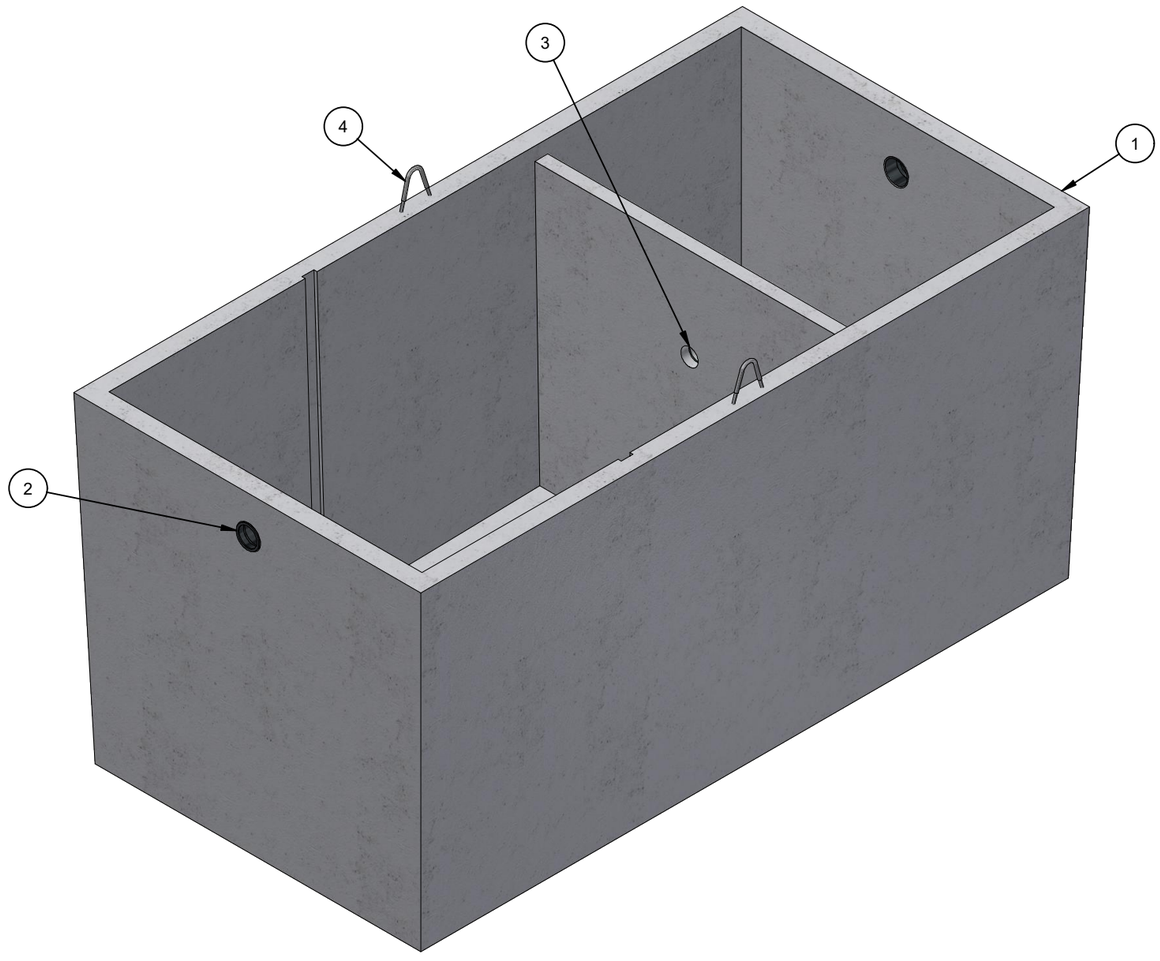

ISO LAYOUT

LIFTING NOTES
■ THIS CONCRETE PRODUCT IS DESIGNED TO BE LIFTED AT 2500 PSI WITH 2 LIFT CONNECTIONS EQUALLY LOADED TO 2 LIFTING POINTS AT A MINIMUM 90° SLING ANGLE, MEASURED FROM HORIZONTAL.

BURY DEPTH:	5.8' - 9.5' to Inside Floor		
WATER LEVEL:	Below Structure	WEIGHT:	19289.11 Lbs
DESIGN SPEC:	ASTM C890,ACI 318	LOADING SPEC:	A-02 (200 psf)
REINFORCEMENT TYPE:	Rebar	LIFTING TYPE:	Cable

JENSEN PRECAST EST. 1968

WWW.JENSENPRECAST.COM

©2019 Jensen Precast- All rights reserved.
All materials appearing as Jensen Precast documents and the like are proprietary work product and are protected under U.S. copyright and other laws.
Unless in conjunction with business conducted with Jensen Precast, any use of Jensen Precast work product without express, written consent is prohibited, and recipient is prohibited from distributing any and all work product to non-approved third parties under penalty of civil action.

REVISION HISTORY			
REV	DESCRIPTION	DATE	BY
A	DRAWING CREATED	5/7/2019	J HILLMAN

DESCRIPTION: Tank PJS 2500 Gallon 4 Inch Rect. Bottom Section Single Baffle CASTING LAYOUT			REV: A
PART NUMBER:	200029422	DRAWN BY: T.Larson	SHEET: 1 OF 3
CREATED:	4/20/2019	MODIFIED: 11/30/2021	

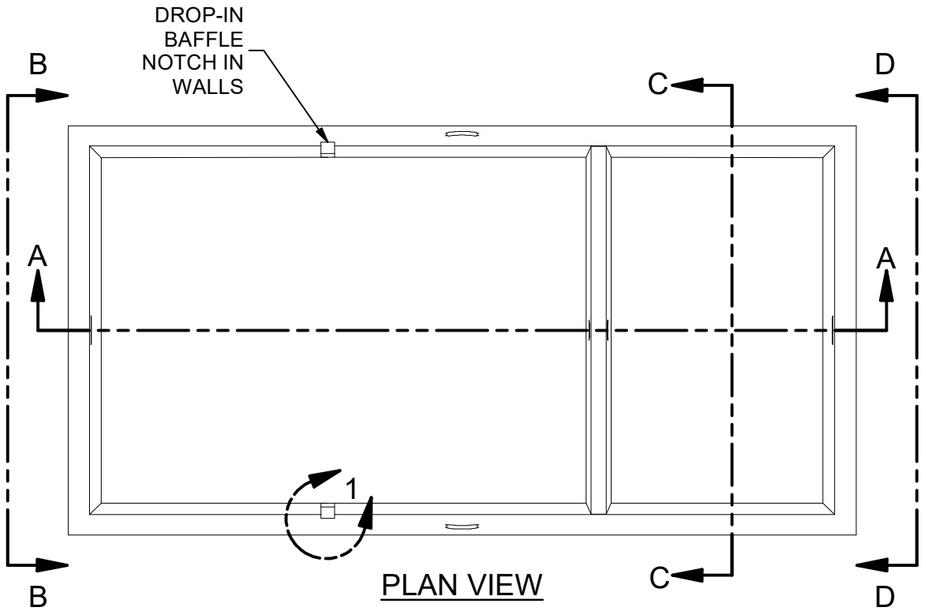

PLAN VIEW

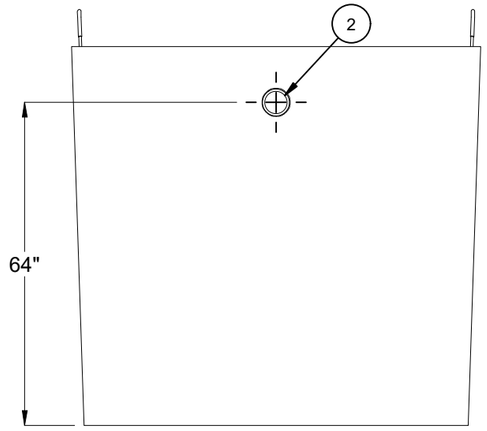

VIEW D-D

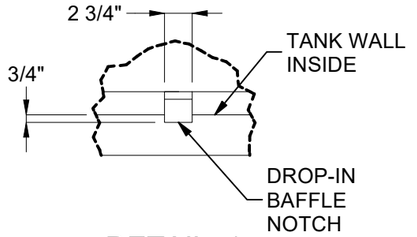

DETAIL 1

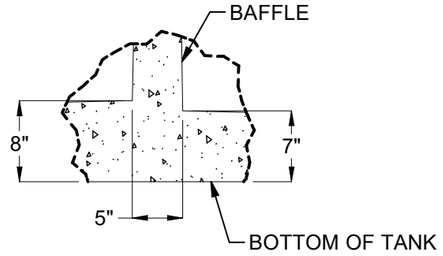

DETAIL 2

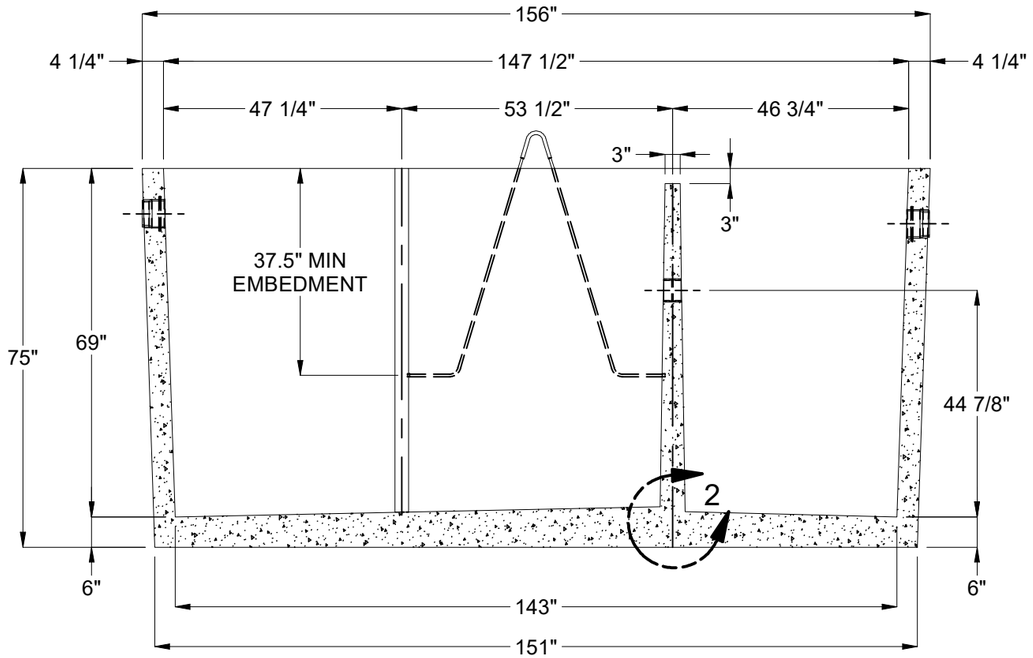

SECTION A-A

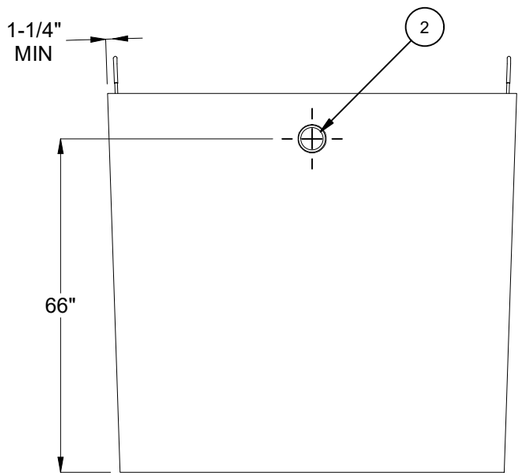

VIEW B-B

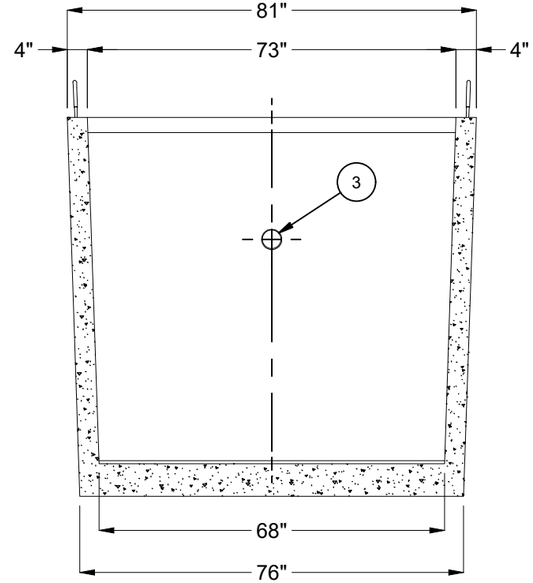

SECTION C-C

BURY DEPTH:	5.8' - 9.5' to Inside Floor		
WATER LEVEL:	Below Structure	WEIGHT:	19289.11 Lbs
DESIGN SPEC:	ASTM C890,ACI 318	LOADING SPEC:	A-02 (200 psf)
REINFORCEMENT TYPE:	Rebar	LIFTING TYPE:	Cable

JENSEN PRECAST EST. 1968

WWW.JENSENPRECAST.COM

©2019 Jensen Precast- All rights reserved.
All materials appearing as Jensen Precast documents and the like are proprietary work product and are protected under U.S. copyright and other laws.
Unless in conjunction with business conducted with Jensen Precast, any use of Jensen Precast work product without express, written consent is prohibited, and recipient is prohibited from distributing any and all work product to non-approved third parties under penalty of civil action.

DESCRIPTION:	Tank PJS 2500 Gallon 4 Inch Rect. Bottom Section Single Baffle CASTING DRAWING		REV: A
PART NUMBER:	200029422	DRAWN BY:	T.Larson
CREATED:	4/20/2019	MODIFIED:	11/30/2021

SHEET: 2 OF 3

200029422.idw

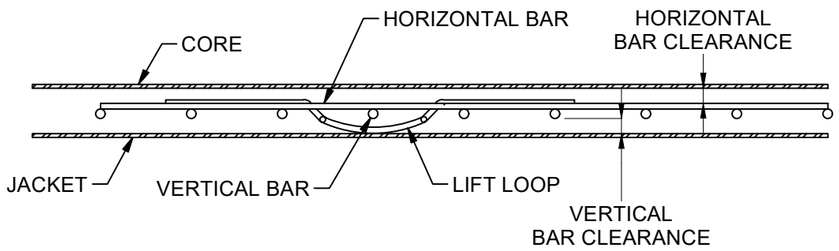

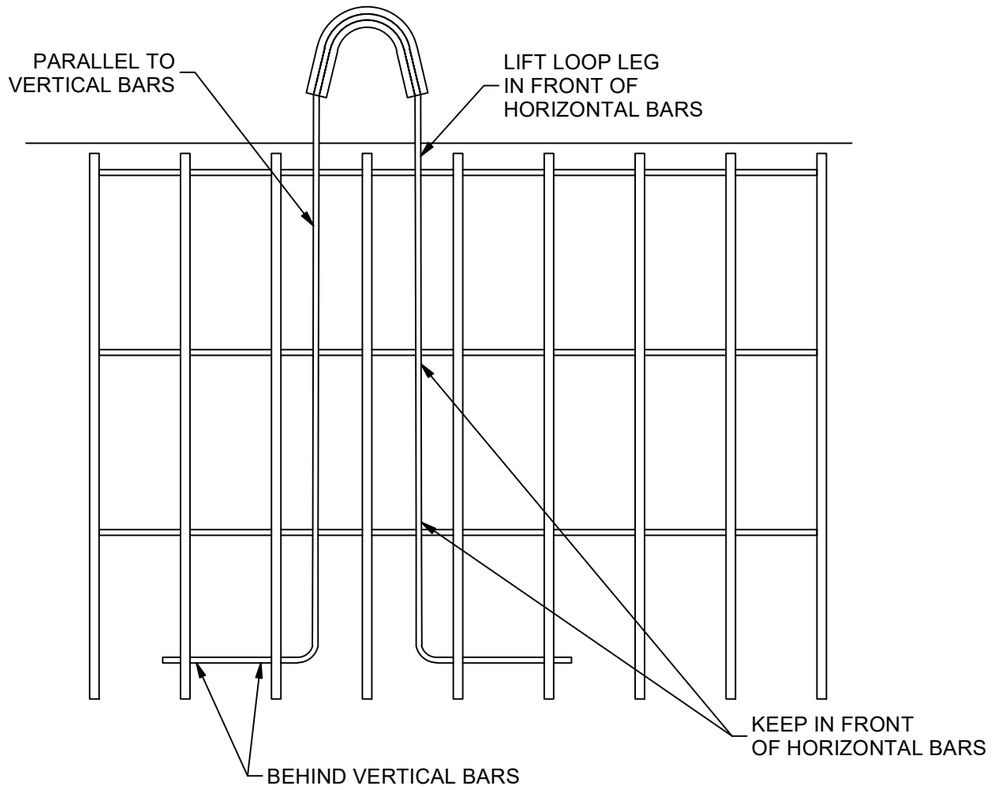

FOR USE WITH THIN WALL PROP CANTILEVER
TANKS WHERE SPECIFIED ON SHOP DRAWING.

200029422.idw

BURY DEPTH: to		JENSEN PRECAST EST. 1968	©2019 Jensen Precast- All rights reserved. All materials appearing as Jensen Precast documents and the like are proprietary work product and are protected under U.S. copyright and other laws. Unless in conjunction with business conducted with Jensen Precast, any use of Jensen Precast work product without express, written consent is prohibited, and recipient is prohibited from distributing any and all work product to non-approved third parties under penalty of civil action.	DESCRIPTION: CABLE LOOP INSTALLATION DETAIL	REV: A
WATER LEVEL:	WEIGHT: Lbs	WWW.JENSENPRECAST.COM		PART NUMBER:	DRAWN BY: T.Larson
DESIGN SPEC:	LOADING SPEC:			CREATED:	MODIFIED: 11/30/2021
REINFORCEMENT TYPE:	LIFTING TYPE:				SHEET: 3 OF 3