BILL OF MATERIALS

ITEM	ITEM QTY	QTY	PART NUMBER	DESCRIPTION	PART NAME
1	1	1	200029391	BOLT ON LADDER LOOP ALUMINUM	200029391

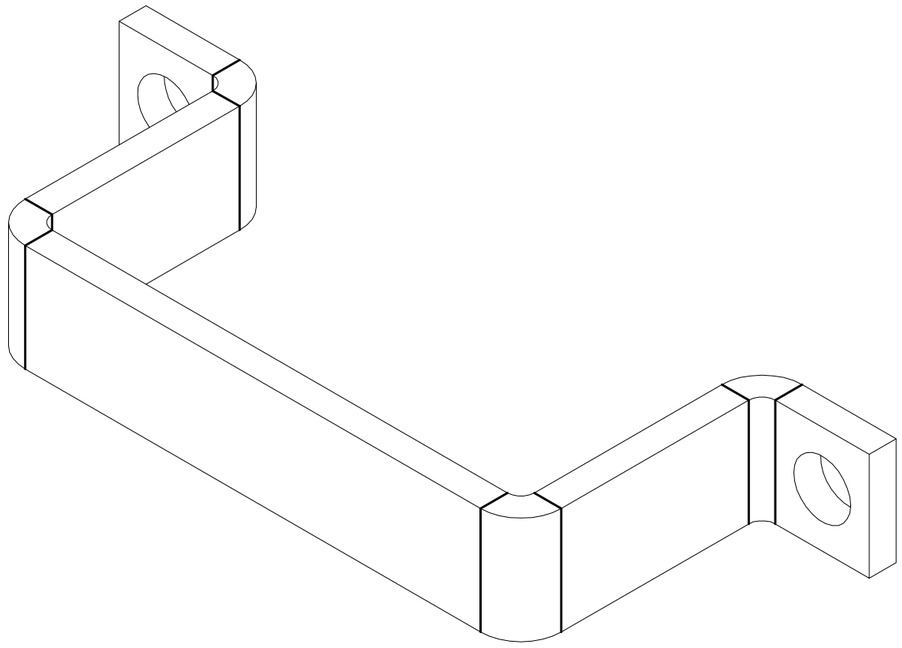

200029391.idw

MATERIAL FINISH: Raw	Infrastructure JENSEN 527 Dunn Circle, Sparks, NV 89431 775-352-2716 FAX: 755-358-8127 *JENSENMETALTECH.COM*	©2026 Jensen Infrastructure - All rights reserved. All materials appearing as Jensen Infrastructure documents and the like are proprietary work product and are protected under U.S. copyright and other laws. Unless in conjunction with business conducted with Jensen Infrastructure , any use of Jensen Infrastructure work product without express, written consent is prohibited, and recipient is prohibited from distributing any and all work product to non-approved third parties under penalty of civil action. This product shall only be produced in a Jensen Infrastructure facility.	PART NUMBER & DESCRIPTION: 200029391 BOLT ON LADDER LOOP ALUMINUM		REV: B-1-2
MATERIAL SURFACE: Smooth			WEIGHT: 0.26 Lbs	DRAWN BY: A.BILLETT	SHEET: 1
			CREATED: 9/3/2026	MODIFIED: 9/11/2026	

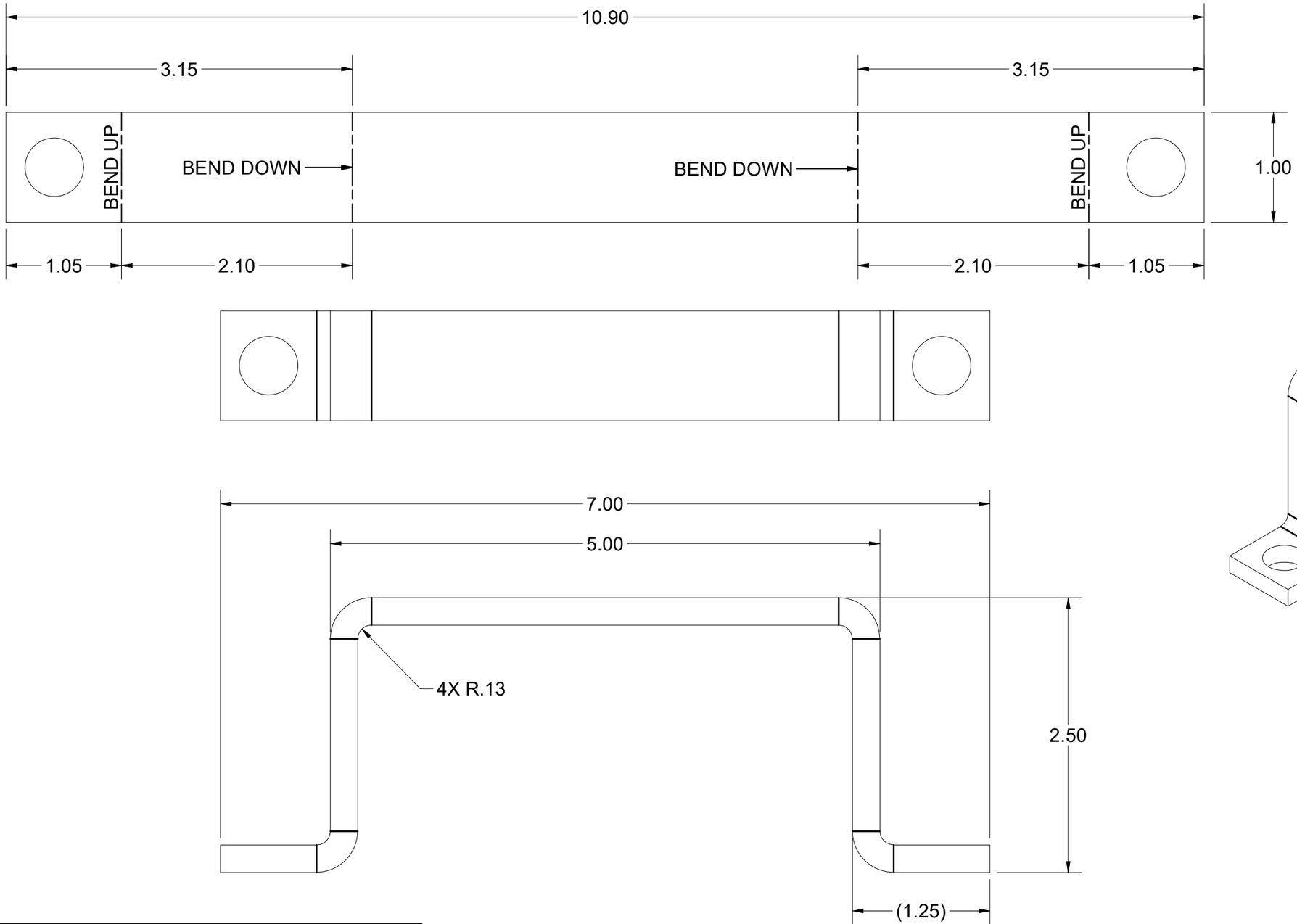

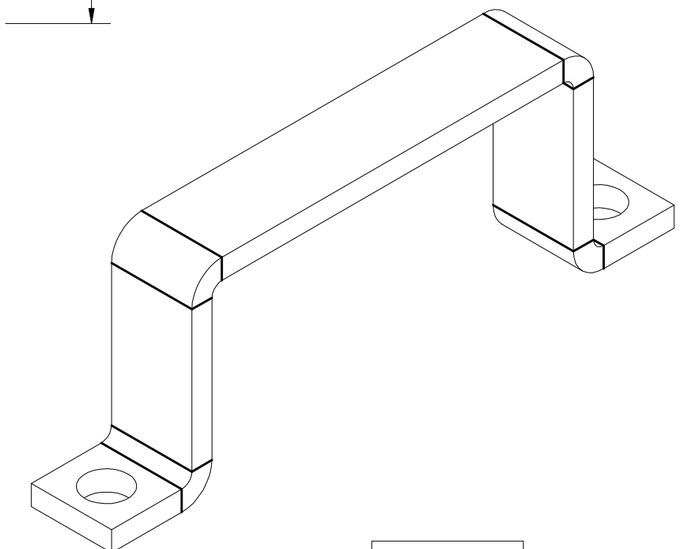

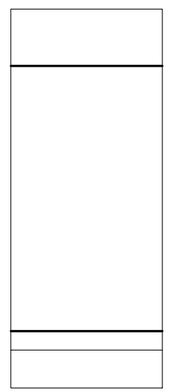

200029391.idw

REVISION HISTORY		
DESCRIPTION	DATE	REVISED BY
CHANGED FROM 0.38" HOLES TO 0.53" HOLES	7/16/2025	M. Newman
61468-1: ADDED BEND LINE CALL OUT	9/3/2026	C. HEYWOOD

BEND TABLE

BEND RADIUS	V-OPENING	BEND ANGLE	BEND DEDUCTION
0.125	1	90	0.4

MATERIAL IFS: 100007811

MATERIAL THK: 0.25

MAT DESCRIPTION: SHT ALUM ASTM 5052 SM RAW .25

Infrastructure
JENSEN
527 Dunn Circle, Sparks, NV 89431
775-352-2716 FAX: 755-358-8127
JENSENMETALTECH.COM

©2026 Jensen Infrastructure - All rights reserved.
All materials appearing as Jensen Infrastructure documents and the like are proprietary work product and are protected under U.S. copyright and other laws. Unless in conjunction with business conducted with Jensen Infrastructure , any use of Jensen Infrastructure work product without express, written consent is prohibited, and recipient is prohibited from distributing any and all work product to non-approved third parties under penalty of civil action.
This product shall only be produced in a Jensen Infrastructure facility.

NAME & DESCRIPTION: 200029391
BOLT ON LADDER LOOP ALUMINUM

REV: B-1-2

WEIGHT: 0.260 lbmass

DRAWN BY: A.BILLETT

CREATED: 9/3/2026

MODIFIED: 9/11/2026

SHEET: 2 OF 2