DESIGN NOTES:

- CONCRETE SHALL HAVE A 28 DAY MINIMUM COMPRESSIVE STRENGTH OF 4000 PSI
- SOIL UNIT WEIGHT DRY - 110 lbs/cu.ft.
- EQUIVALENT LATERAL PRESSURE DRY - 40 lbs/cu.ft.
- SOIL UNIT WEIGHT WET - 120 lbs/cu.ft.
- EQUIVALENT LATERAL PRESSURE WET - 80 lbs/cu.ft.

PRODUCTION NOTES:

- THIS PRODUCT SHALL ONLY BE PRODUCED IN A JENSEN INFRASTRUCTURE FACILITY
- LIFTING INSERTS SHALL BE INSTALLED PER MANUFACTURER'S REQUIREMENTS
- APPLIED FINISH - NONE
- INTERNAL LINER/COATING - NONE
- EXTERNAL LINER/COATING - NONE

BILL OF MATERIALS

ITEM	QTY	PART NUMBER	DESCRIPTION
1	17.251 ft^3	100002728	CONCRETE MIX GENERIC 4000 PSI
2	1	200019088	WWR REINFORCING CAGE 200019088
3	2	100004878	ANCHOR UTILITY .671DIA 5-SLAB GALV P75 5UA671

ALTERNATE REINFORCING OPTIONS

PART NUMBER	DESCRIPTION
200041822	BAR REINFORCING CAGE 200041822
200041823	MBK WIRE REINFORCING CAGE 200041823



ISOMETRIC VIEW

200028384.idw

LIFTING NOTES

■ THIS CONCRETE PRODUCT IS DESIGNED TO BE LIFTED AT 2500 PSI WITH 2 LIFT CONNECTIONS EQUALLY LOADED TO 2 LIFTING POINTS AT A MINIMUM 45° SLING ANGLE, MEASURED FROM HORIZONTAL.

*All rigging shall be design by a qualified professional. Loading diagrams show illustrations of possible rigging setups to achieve the required sling angle and load leg equalization. Other valid rigging configurations are possible. A qualified professional must be consulted prior to lifting.

RIGGING DIAGRAM* F

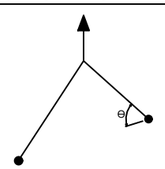

BURY DEPTH:	0.0' - 99.0' to Top		
WATER LEVEL:	0.0'	APPROX. WEIGHT:	2628.91 Lbs
DESIGN SPEC:	ASTM C478	LOADING SPEC:	A-16 (AASHTO HS20-44)
REINFORCEMENT TYPE:	WWR Plain	LIFTING TYPE:	SP Socket

Infrastructure JENSEN

WWW.JENSENINFRASTRUCTURE.COM

©2026 Jensen Infrastructure - All rights reserved.
All materials appearing as Jensen Infrastructure documents and the like are proprietary work product and are protected under U.S. copyright and other laws.
Unless in conjunction with business conducted with Jensen Infrastructure , any use of Jensen Infrastructure work product without express, written consent is prohibited, and recipient is prohibited from distributing any and all work product to non-approved third parties under penalty of civil action.
This product shall only be produced in a Jensen Infrastructure facility.

CHANGE HISTORY

NO.	DESCRIPTION	DATE	BY
1	2211-54543	11/8/2023	APS

DESCRIPTION:	Manhole D4858x36 Barrel GU CASTING LAYOUT		REV: A-1
PART NUMBER:	200028384	DRAWN BY:	A.Sprung
CREATED:	11/8/2023	MODIFIED:	1/5/2026
			SHEET: 1 OF 2

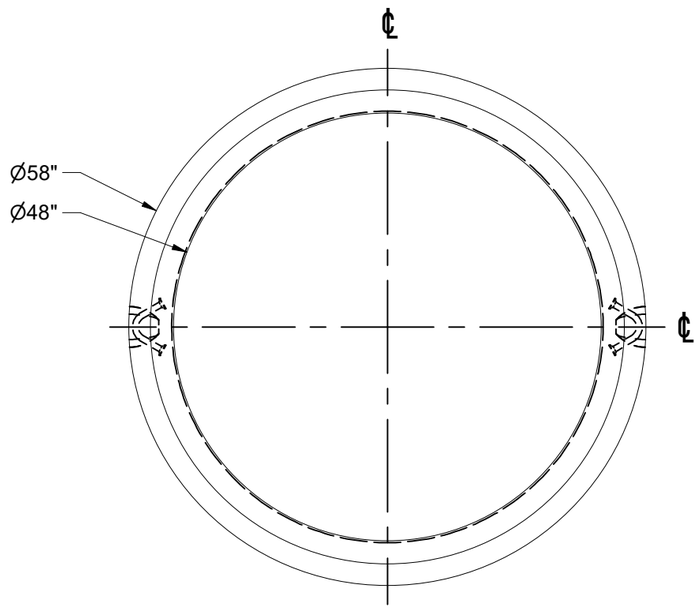

PLAN VIEW

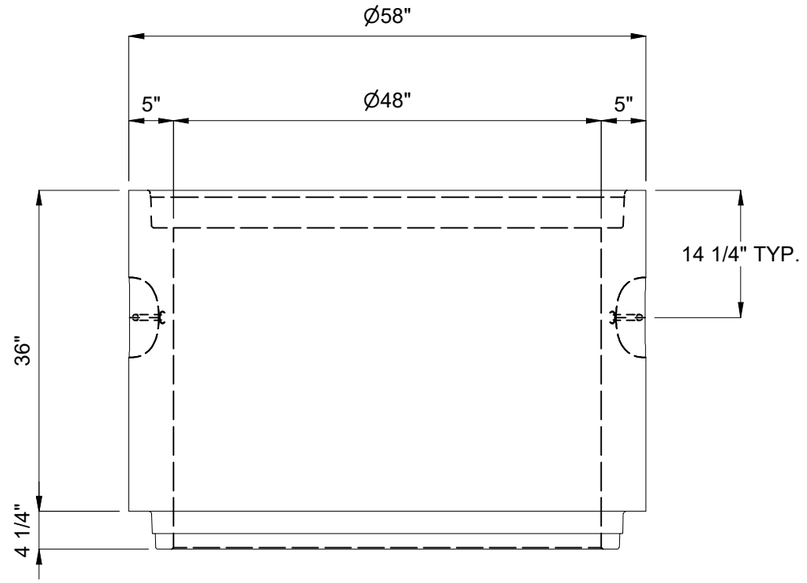

PROFILE VIEW

BURY DEPTH:	0.0' - 99.0' to Top		
WATER LEVEL:	0.0'	APPROX. WEIGHT:	2628.91 Lbs
DESIGN SPEC:	ASTM C478	LOADING SPEC:	A-16 (AASHTO HS20-44)
REINFORCEMENT TYPE:	WWR Plain	LIFTING TYPE:	SP Socket

Infrastructure
JENSEN
WWW.JENSENINFRASTRUCTURE.COM

©2026 Jensen Infrastructure - All rights reserved.
All materials appearing as Jensen Infrastructure documents and the like are proprietary work product and are protected under U.S. copyright and other laws.
Unless in conjunction with business conducted with Jensen Infrastructure , any use of Jensen Infrastructure work product without express, written consent is prohibited, and recipient is prohibited from distributing any and all work product to non-approved third parties under penalty of civil action.
This product shall only be produced in a Jensen Infrastructure facility.

DESCRIPTION:	Manhole D4858x36 Barrel GU CASTING DRAWING		REV: A-1
PART NUMBER:	200028384	DRAWN BY:	A.Sprung
CREATED:	11/8/2023	MODIFIED:	1/5/2026
			SHEET: 2 OF 2

200028384.idw