NOTES

- FOR COMPLETE DESIGN AND PRODUCT INFORMATION CONTACT JENSEN PRECAST.

BILL OF MATERIALS

ITEM	UNIT QTY	QTY	PART NUMBER	DESCRIPTION
1	5.751 ft^3	5.259 ft^3	100002728	CONCRETE MIX GENERIC 4000 PSI

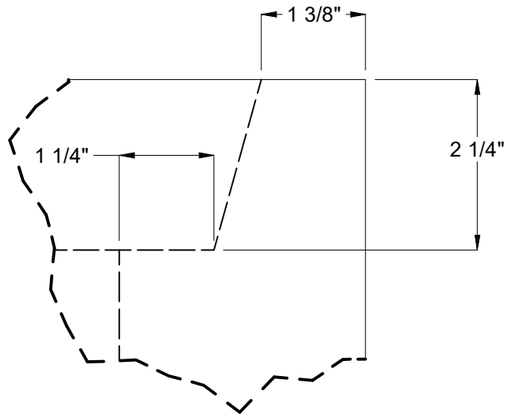

DETAIL F

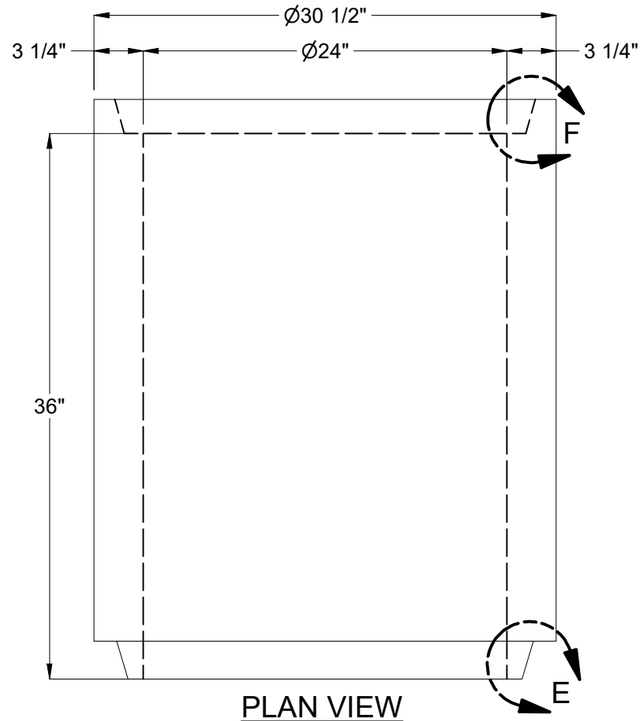

PLAN VIEW



ISO VIEW

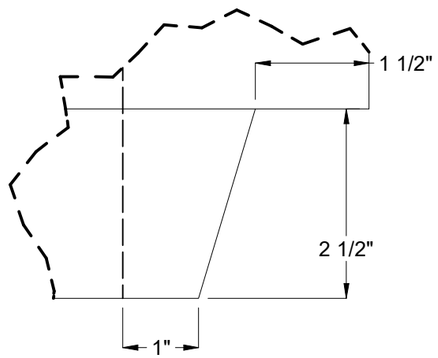

DETAIL E

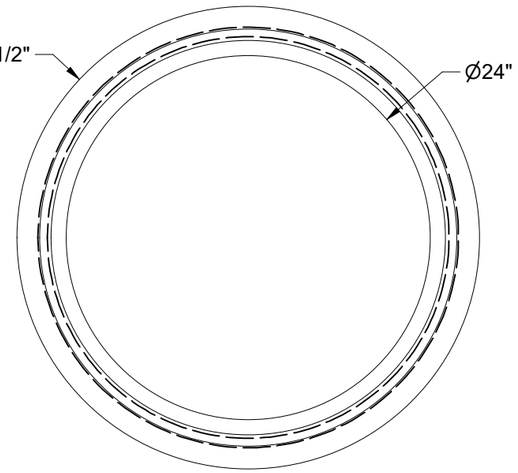

FRONT VIEW

CHANGE HISTORY

NO.	DESCRIPTION	DATE	BY
1	PRELIMINARY SUBMITTAL - 2211-54543	1/3/2024	APS
2			
3			

BURY DEPTH:	to		
WATER LEVEL:		APPROX. WEIGHT:	864.34 Lbs
DESIGN SPEC:	ASTM C14	LOADING SPEC:	Class 2
REINFORCEMENT TYPE:	None	LIFTING TYPE:	None

JENSEN PRECAST EST. 1968

WWW.JENSENPRECAST.COM

©2024 Jensen Precast- All rights reserved.
All materials appearing as Jensen Precast documents and the like are proprietary work product and are protected under U.S. copyright and other laws.
Unless in conjunction with business conducted with Jensen Precast, any use of Jensen Precast work product without express, written consent is prohibited, and recipient is prohibited from distributing any and all work product to non-approved third parties under penalty of civil action.

DESCRIPTION: CP P24B Class 2 Bell - Spigot 36L Concrete Bell

CASTING LAYOUT

PART NUMBER:	200028292	DRAWN BY:	A.Sprung
CREATED:	3/2/2023	MODIFIED:	1/4/2024

REV: A-2

SHEET: 1 OF 1

200028292.idw