| DESIGN NOTES |
|---|
| ■ MINIMUM EXCAVATION SIZE: 17'-7" X 8'-8" DEPTH REQ'D. |
| ■ FOR COMPLETE DESIGN AND PRODUCT INFORMATION CONTACT JENSEN PRECAST. |

## BILL OF MATERIALS

| ITEM | QTY | PART NUMBER | DESCRIPTION |
|---|---|---|---|
| 1 | 157.138 ft^3 | 100011427 | CONCRETE MIX GENERIC 6000 PSI |
| 2 | 2 | 100007338 | CONNECTOR BOOT 3005-CE TYPE VI CAST-IN-SEAL ASTM C923/C1644 CLOSED HOLE-4-6 4.52-6.64 |
| 3 | 4 | 100026190 | ANCHOR CABLE LOOP LIFT SEPTIC 1/2 X 51 500-5100 |
| 4 | 24 | 100003348 | INS THRD FRL THNSLB STRUT FX-16 5/8IN ZINC |
| 5 | 1 | 300122318 | REINFORCING MAT 300122318 |

200026244.idw

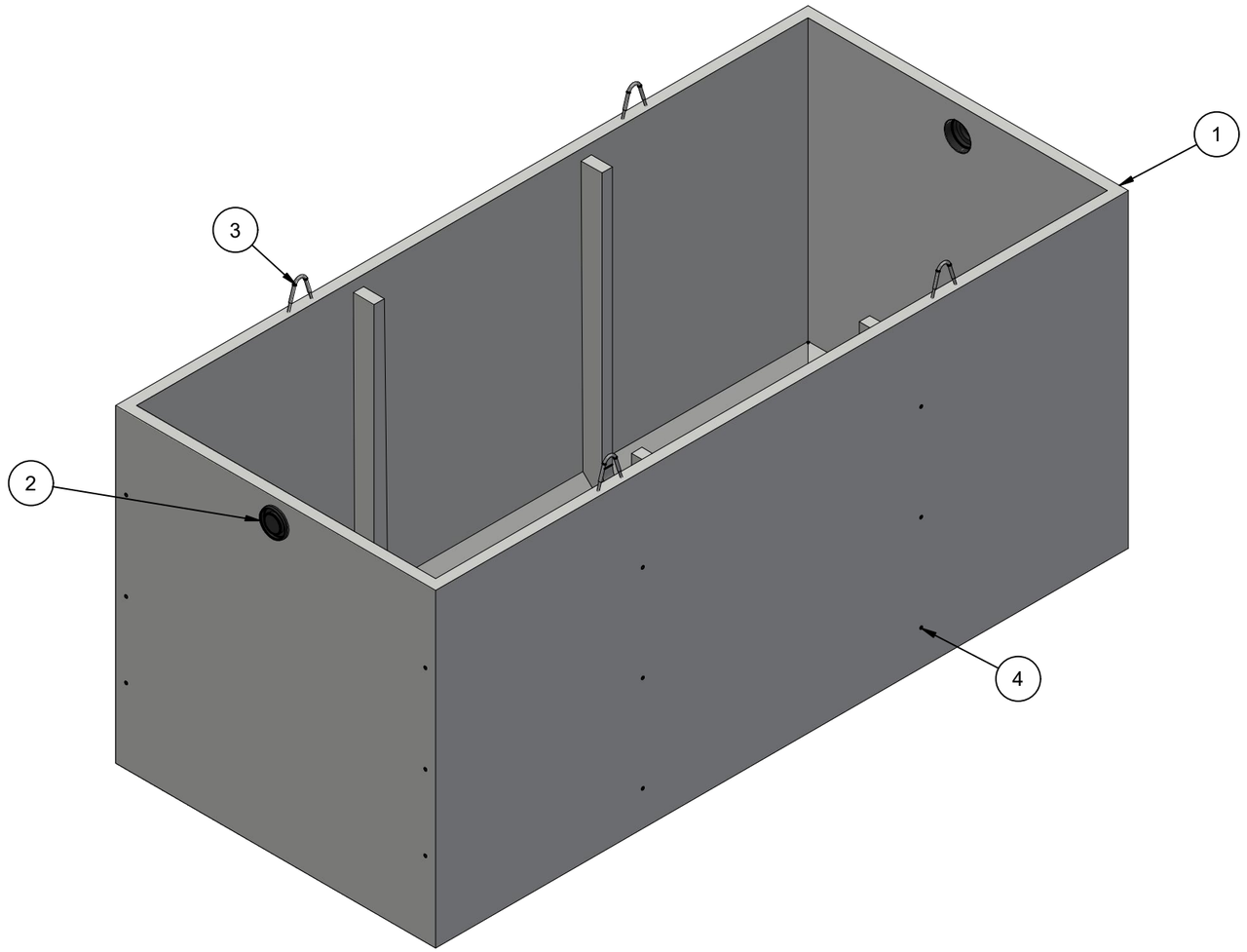


ISO LAYOUT

| LIFTING NOTES |
|---|
| ■ FIELD INSTALLATION: PLANT DEMOLDING: MINIMUM HANDLING CONCRETE STRENGTH F'c = 2500 PSI RIGGING EQUALIZER REQUIRED TO EQUALIZE LOAD TO 4 LIFTING POINTS WITH A SLING ANGLE OF 90° |

| REVISION HISTORY | | | |
|---|---|---|---|
| REV | DESCRIPTION | DATE | BY |
| A | DRAWING CREATED | 8/21/2019 | T.Larson |
| B | THREADED INSERTS AND BAFFLE WALL NOTCH FIXED | 4/29/2022 | E.FINE |

| | | | |
|---|---|---|---|
| BURY DEPTH: | 1.8' - 4.8' to Top | | |
| WATER LEVEL: | Below Structure | WEIGHT: | 23650.85 Lbs |
| DESIGN SPEC: | ASTM C890,ACI 318 | LOADING SPEC: | A-16 (AASHTO HS20-44) |
| REINFORCEMENT TYPE: | Rebar | LIFTING TYPE: | Cable |

JENSEN PRECAST EST. 1968

WWW.JENSENPRECAST.COM

©2018 Jensen Precast- All rights reserved.
All materials appearing as Jensen Precast documents and the like are proprietary work product and are protected under U.S. copyright and other laws.
Unless in conjunction with business conducted with Jensen Precast, any use of Jensen Precast work product without express, written consent is prohibited, and recipient is prohibited from distributing any and all work product to non-approved third parties under penalty of civil action.

| | | | |
|---|---|---|---|
| DESCRIPTION: | Tank JZ 5000 Gallon 6 Inch Rect. Bottom Section No Baffle CASTING LAYOUT | | REV: B-3 |
| PART NUMBER: | 200026244 | DRAWN BY: | E. Fine |
| CREATED: | 3/20/2018 | MODIFIED: | 8/30/2022 |
| | | | SHEET: 1 OF 3 |

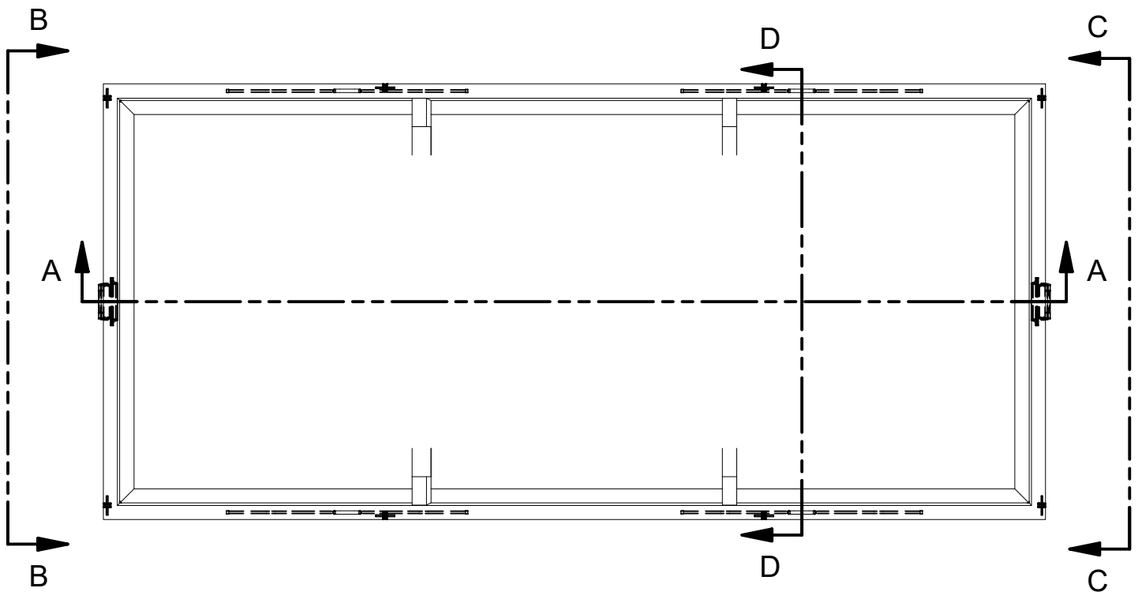


PLAN VIEW

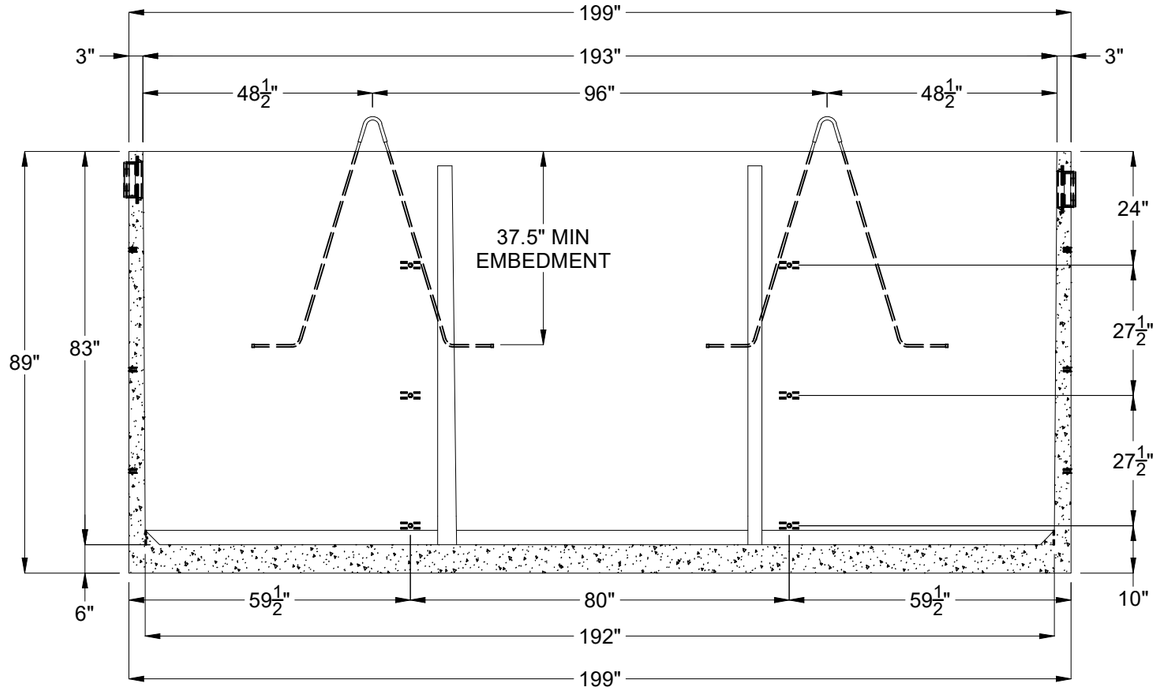


SECTION A-A

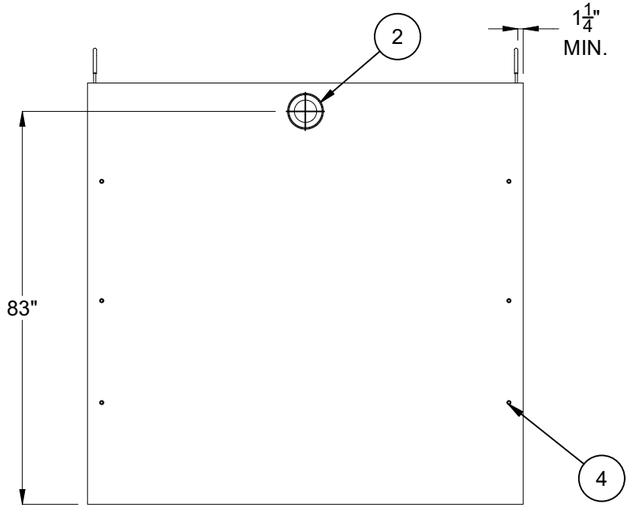


VIEW B-B

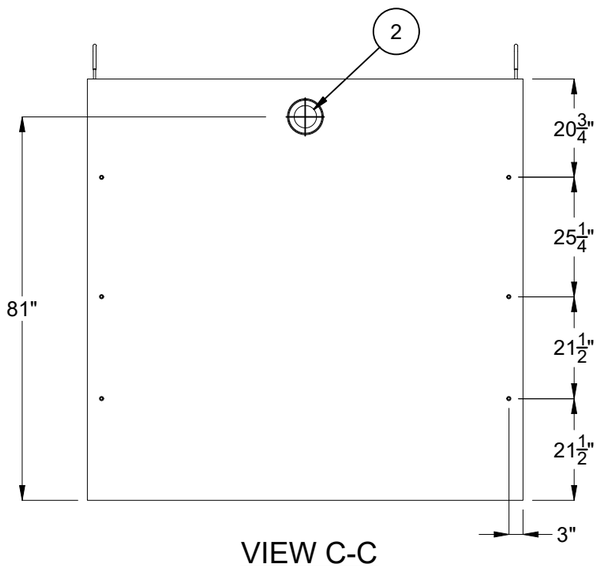


VIEW C-C

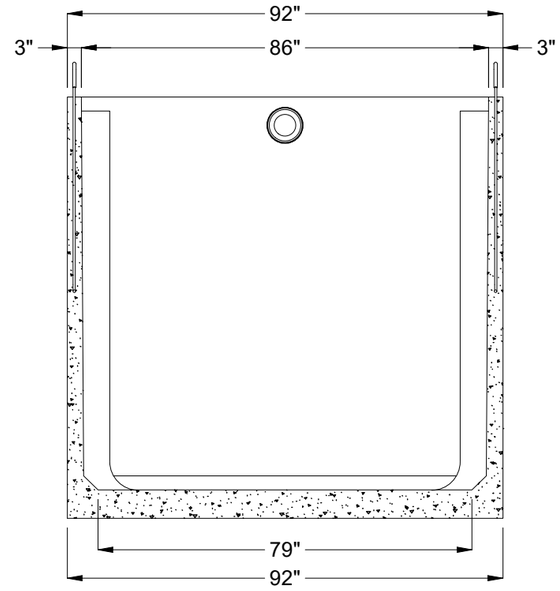


SECTION D-D

| | | | |
|---|---|---|---|
| BURY DEPTH: | 1.8' - 4.8' to Top | | |
| WATER LEVEL: | Below Structure | WEIGHT: | 23650.85 Lbs |
| DESIGN SPEC: | ASTM C890,ACI 318 | LOADING SPEC: | A-16 (AASHTO HS20-44) |
| REINFORCEMENT TYPE: | Rebar | LIFTING TYPE: | Cable |

JENSEN PRECAST EST. 1968

WWW.JENSENPRECAST.COM

©2018 Jensen Precast- All rights reserved.
All materials appearing as Jensen Precast documents and the like are proprietary work product and are protected under U.S. copyright and other laws.
Unless in conjunction with business conducted with Jensen Precast, any use of Jensen Precast work product without express, written consent is prohibited, and recipient is prohibited from distributing any and all work product to non-approved third parties under penalty of civil action.

| | | | |
|---|---|---|---|
| DESCRIPTION: | Tank JZ 5000 Gallon 6 Inch Rect. Bottom Section No Baffle<br>CASTING DRAWING | | REV: B-3 |
| PART NUMBER: | 200026244 | DRAWN BY: | E. Fine |
| CREATED: | 3/20/2018 | MODIFIED: | 8/30/2022 |

SHEET: 2 OF 3

200026244.idw

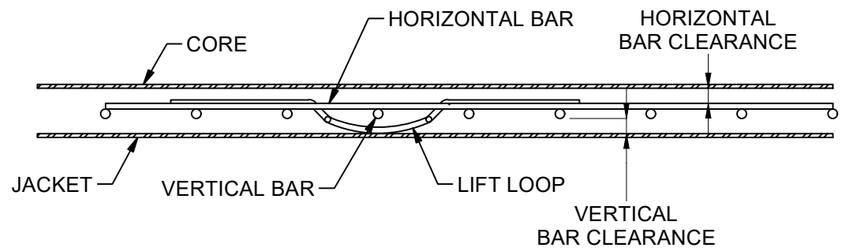


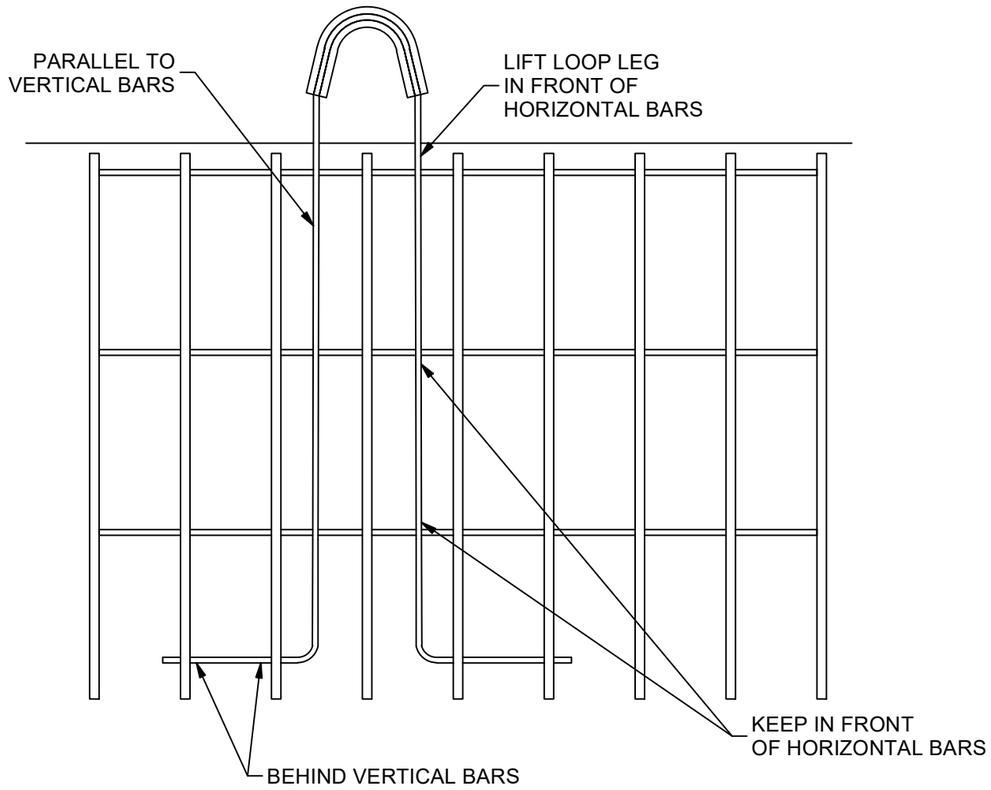


FOR USE WITH THIN WALL PROP CANTILEVER
TANKS WHERE SPECIFIED ON SHOP DRAWING.

200026244.idw

| | | | | | |
|---|---|---|---|---|---|
| BURY DEPTH: to | | JENSEN PRECAST EST. 1968 WWW.JENSENPRECAST.COM | ©2018 Jensen Precast- All rights reserved. All materials appearing as Jensen Precast documents and the like are proprietary work product and are protected under U.S. copyright and other laws. Unless in conjunction with business conducted with Jensen Precast, any use of Jensen Precast work product without express, written consent is prohibited, and recipient is prohibited from distributing any and all work product to non-approved third parties under penalty of civil action. | DESCRIPTION: CABLE LOOP INSTALLATION DETAIL | REV: B-3 |
| WATER LEVEL: | WEIGHT: Lbs | | | PART NUMBER: / DRAWN BY: E. Fine | SHEET: 3 OF 3 |
| DESIGN SPEC: | LOADING SPEC: | | | CREATED: / MODIFIED: 8/30/2022 | |
| REINFORCEMENT TYPE: | LIFTING TYPE: | | | | |