DESIGN NOTES
■ MINIMUM EXCAVATION SIZE:9'-2" X 6'-1" DEPTH REQ'D.
■ FOR COMPLETE DESIGN AND PRODUCT INFORMATION CONTACT JENSEN PRECAST.

BILL OF MATERIALS

ITEM	QTY	PART NUMBER	DESCRIPTION
1	1	200026166	Tank JS 1000 Gallon 4 Inch Rect. Bottom Section No Baffle
2	1	200011193	Tank JS 1000 Gallon x 5 Slab Top 24"E, 24"E Tuf-Tite
3	2	100013648	SEALANT JOINT BUTYL RUBBER ASTM C-990 AND M198 CS-102 1IN EQUIV X14.5FT PER ROLL

200026175.idw

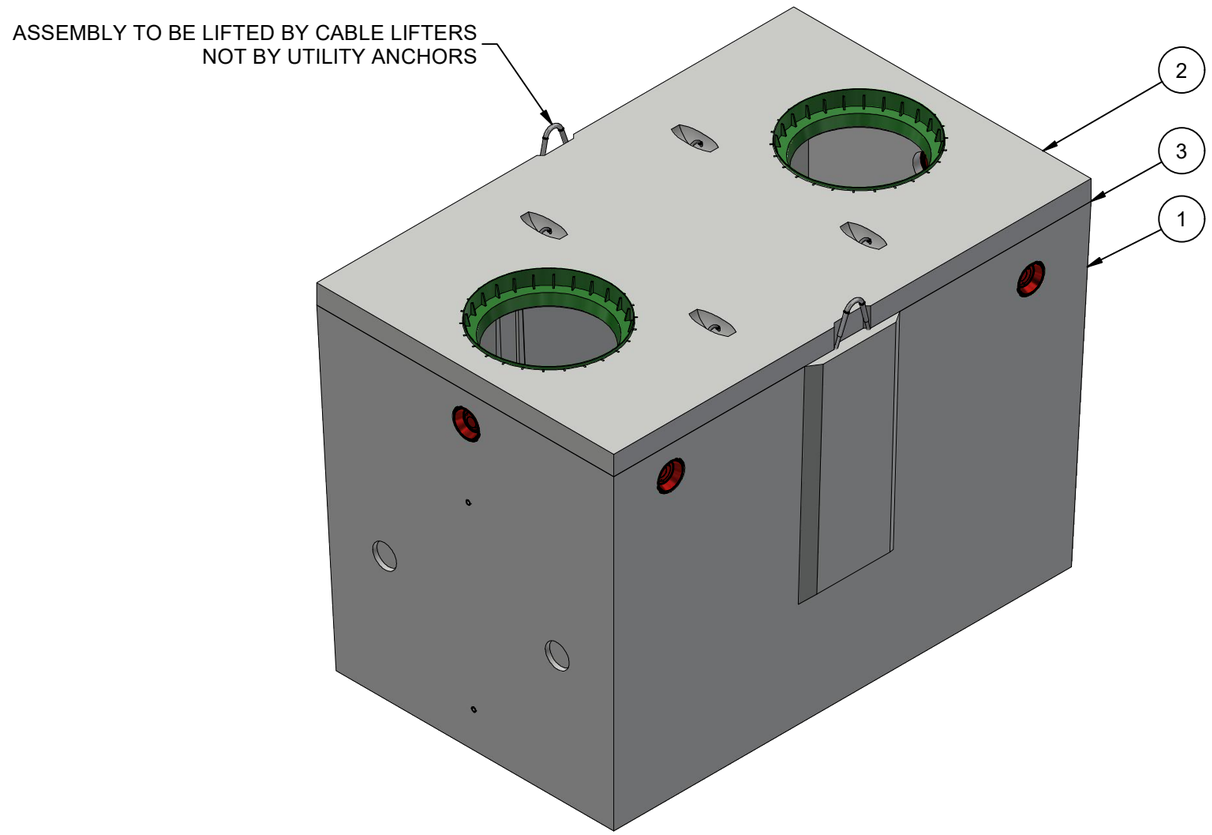

ISO LAYOUT

LIFTING NOTES
■ FIELD INSTALLATION: PLANT DEMOLDING: MINIMUM HANDLING CONCRETE STRENGTH F'c = 2500 PSI RIGGING EQUALIZER REQUIRED TO EQUALIZE LOAD TO 2 LIFTING POINTS WITH A SLING ANGLE OF 90°

REVISION HISTORY			
REV	DESCRIPTION	DATE	BY
A	DRAWING CREATED	8/16/2019	T.Larson
B	PROPERTIES UPDATED	7/13/2022	E.FINE

BURY DEPTH:	0.0' - 3.0' to Top		
WATER LEVEL:	Below Structure	WEIGHT:	9387.43 Lbs
DESIGN SPEC:	ASTM C890,ACI 318	LOADING SPEC:	A-02 (200 psf)
REINFORCEMENT TYPE:		LIFTING TYPE:	Cable

JENSEN PRECAST EST. 1968

WWW.JENSENPRECAST.COM

©2018 Jensen Precast- All rights reserved.
All materials appearing as Jensen Precast documents and the like are proprietary work product and are protected under U.S. copyright and other laws.
Unless in conjunction with business conducted with Jensen Precast, any use of Jensen Precast work product without express, written consent is prohibited, and recipient is prohibited from distributing any and all work product to non-approved third parties under penalty of civil action.

DESCRIPTION:	Tank JS 1000 Gallon 4 Inch Assembly 24"E, 24"E Tuf-Tite No Baffle LAYOUT REVIEW		REV: B-2
PART NUMBER:	200026175	DRAWN BY:	E. Fine
CREATED:	1/31/2019	MODIFIED:	7/13/2022
			SHEET: 1 OF 1