NOTES
■ LOAD CONDITION 1: H-20 TRAFFIC WITH DRY SOIL CONDITIONS (WATER LEVEL BELOW TANK) AND 13 INCHES TO 14 FEET OF SOIL COVER
■ LOAD CONDITION 2: H-20 TRAFFIC WITH WATER LEVEL 2 FEET BELOW GRADE AND 13 INCHES TO 9 FEET OF SOIL COVER
■ PROPERTIES SHOWN ARE FOR LOAD CONDITION 2
■ FOR COMPLETE DESIGN AND PRODUCT INFORMATION CONTACT JENSEN PRECAST.

BILL OF MATERIALS

ITEM	QTY	PART NUMBER	DESCRIPTION
1	101.868 ft^3	100011425	CONCRETE MIX GENERIC 5000 PSI
2	4	100007133	ANCHOR UTILITY .671DIA 7.625-SLAB GALV P75 8UA671
3	1	300122063	REINFORCING MAT 300122063
4	1	300122588	REINFORCING MAT 300122588

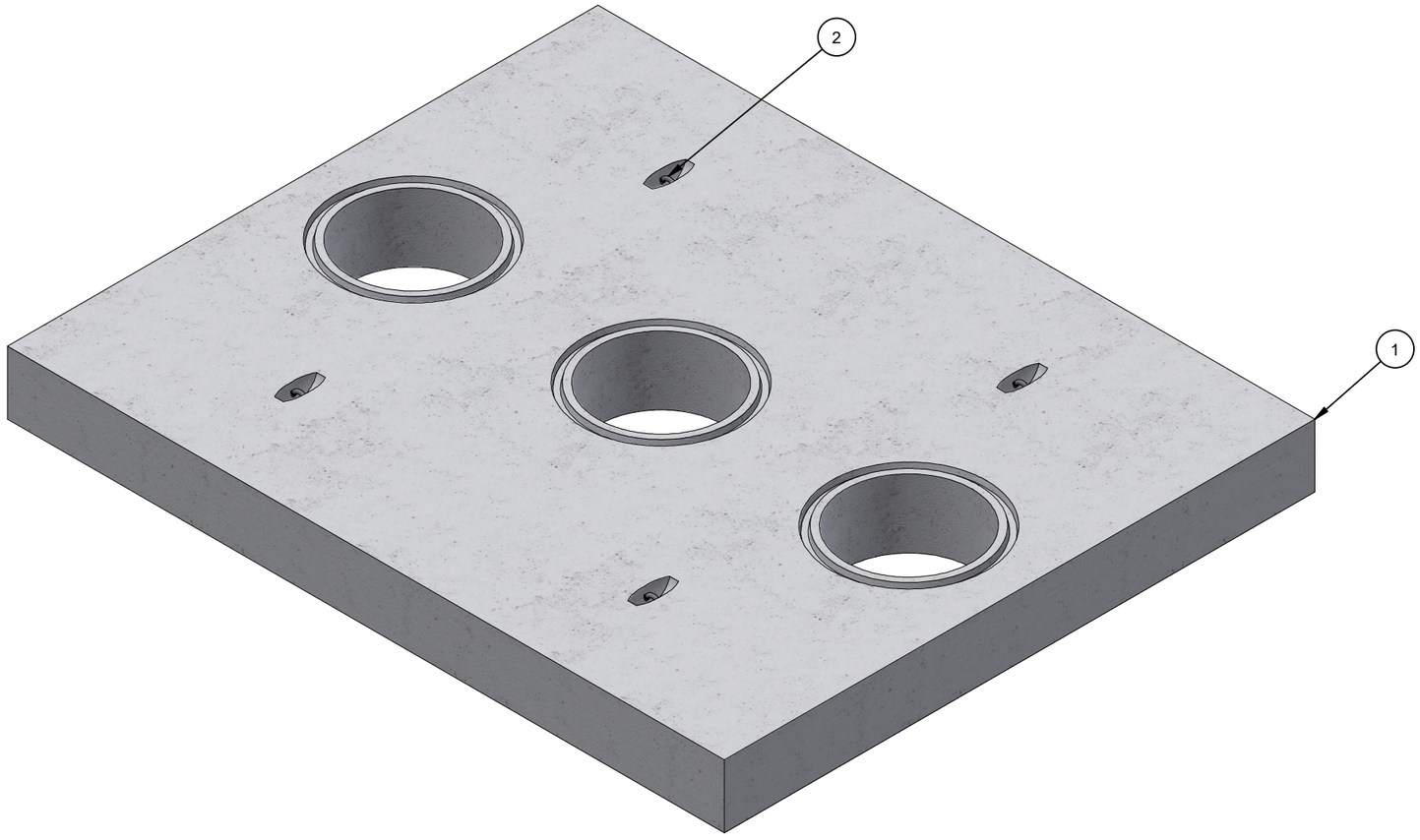

ISO LAYOUT

LIFTING NOTES
■ THIS CONCRETE PRODUCT IS DESIGNED TO BE LIFTED AT 2500PSI WITH 4 LIFT CONNECTIONS EQUALLY LOADED TO 2 LIFTING POINTS AT A MINIMUM 60° SLING ANGLE, MEASURED FROM HORIZONTAL.

BURY DEPTH:	1.1' - 9.0' to Top		
WATER LEVEL:	2.0'	WEIGHT:	15315.74 Lbs
DESIGN SPEC:	ACI 318,ASTM C890	LOADING SPEC:	A-16 (AASHTO HS20-44)
REINFORCEMENT TYPE:	Rebar	LIFTING TYPE:	A-Anchor

JENSEN PRECAST EST. 1968

WWW.JENSENPRECAST.COM

©2018 Jensen Precast- All rights reserved.
All materials appearing as Jensen Precast documents and the like are proprietary work product and are protected under U.S. copyright and other laws.
Unless in conjunction with business conducted with Jensen Precast, any use of Jensen Precast work product without express, written consent is prohibited, and recipient is prohibited from distributing any and all work product to non-approved third parties under penalty of civil action.

REVISION HISTORY			
REV	DESCRIPTION	DATE	BY
A	DRAWING CREATED	7/26/2019	T.Larson
B	REBAR & LIFTING UPDATED AND GROOVE ADDED	12/15/2020	CMK

DESCRIPTION:	Tank MU 2000-3000 Gallon x 12 Slab Top 24"E, 24"C, 24"E HGW CASTING LAYOUT		REV: B-1
PART NUMBER:	200024695	DRAWN BY:	T.Larson
CREATED:	7/25/2019	MODIFIED:	2/3/2021
			SHEET: 1 OF 2

200024695.idw

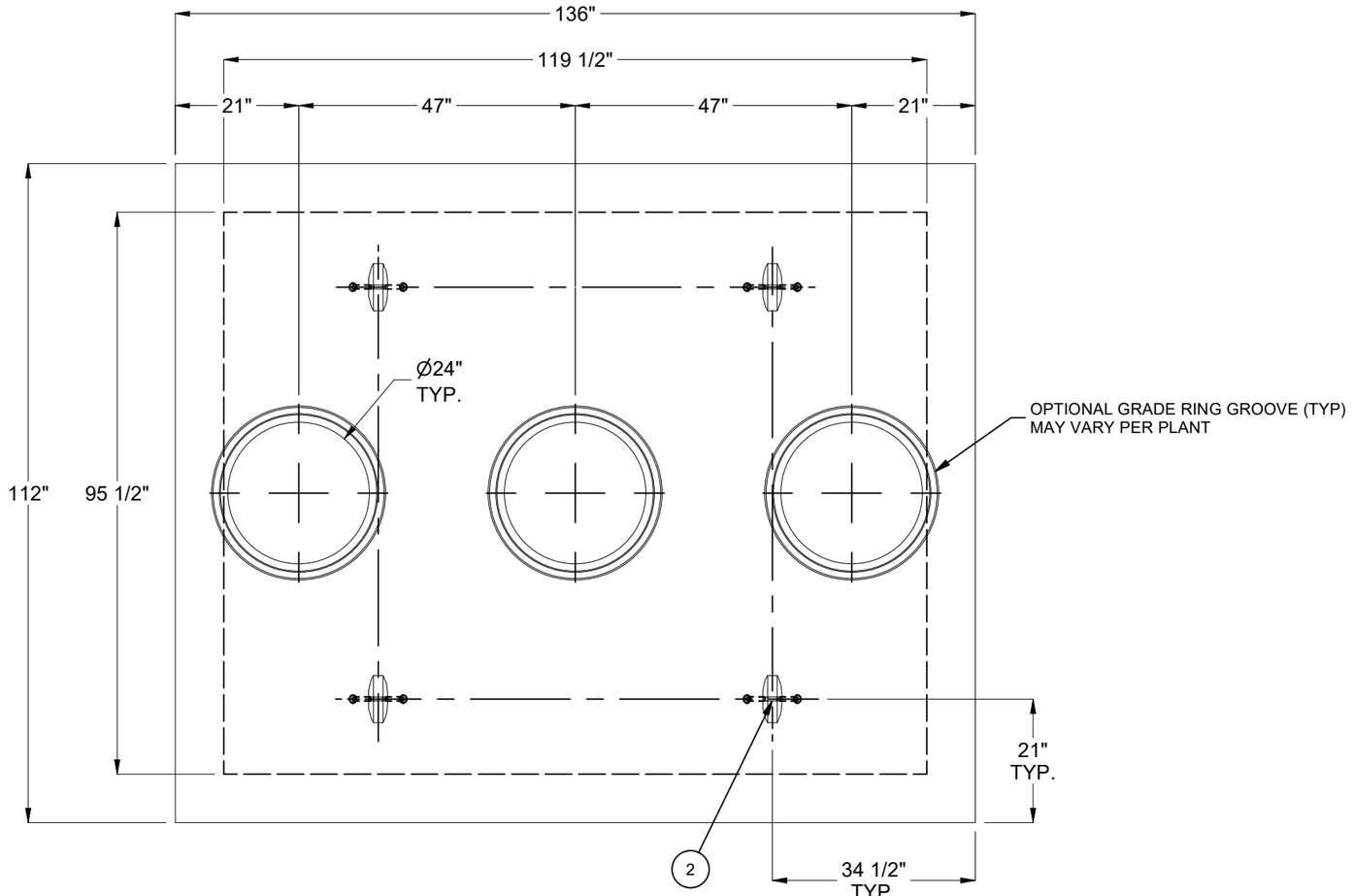

PLAN VIEW

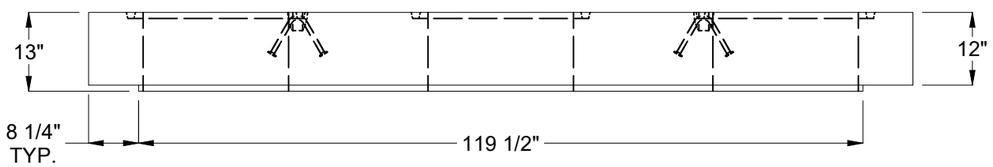

SIDE VIEW

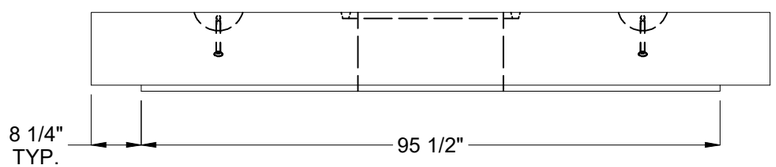

END VIEW

BURY DEPTH:	1.1' - 9.0' to Top		
WATER LEVEL:	2.0'	WEIGHT:	15315.74 Lbs
DESIGN SPEC:	ACI 318,ASTM C890	LOADING SPEC:	A-16 (AASHTO HS20-44)
REINFORCEMENT TYPE:	Rebar	LIFTING TYPE:	A-Anchor

JENSEN PRECAST EST. 1968

WWW.JENSENPRECAST.COM

©2018 Jensen Precast- All rights reserved.
All materials appearing as Jensen Precast documents and the like are proprietary work product and are protected under U.S. copyright and other laws.
Unless in conjunction with business conducted with Jensen Precast, any use of Jensen Precast work product without express, written consent is prohibited, and recipient is prohibited from distributing any and all work product to non-approved third parties under penalty of civil action.

DESCRIPTION:	Tank MU 2000-3000 Gallon x 12 Slab Top 24"E, 24"C, 24"E HGW CASTING DRAWING		
PART NUMBER:	200024695	DRAWN BY:	T.Larson
CREATED:	7/25/2019	MODIFIED:	2/3/2021

REV: B-1

SHEET: 2 OF 2

200024695.idw