NOTES
■ FOR COMPLETE DESIGN AND PRODUCT INFORMATION CONTACT JENSEN PRECAST.

BILL OF MATERIALS

ITEM	UNIT QTY	QTY	PART NUMBER	DESCRIPTION
1	7.489 ft^3	7.489 ft^3	100011425	CONCRETE MIX GENERIC 5000 PSI
2	1	1	300121626	REINFORCING MAT 300121626
3	1	3	100004880	ANCHOR UTILITY .671DIA 5.625-SLAB GALV P75 6UA671

200022552.idw

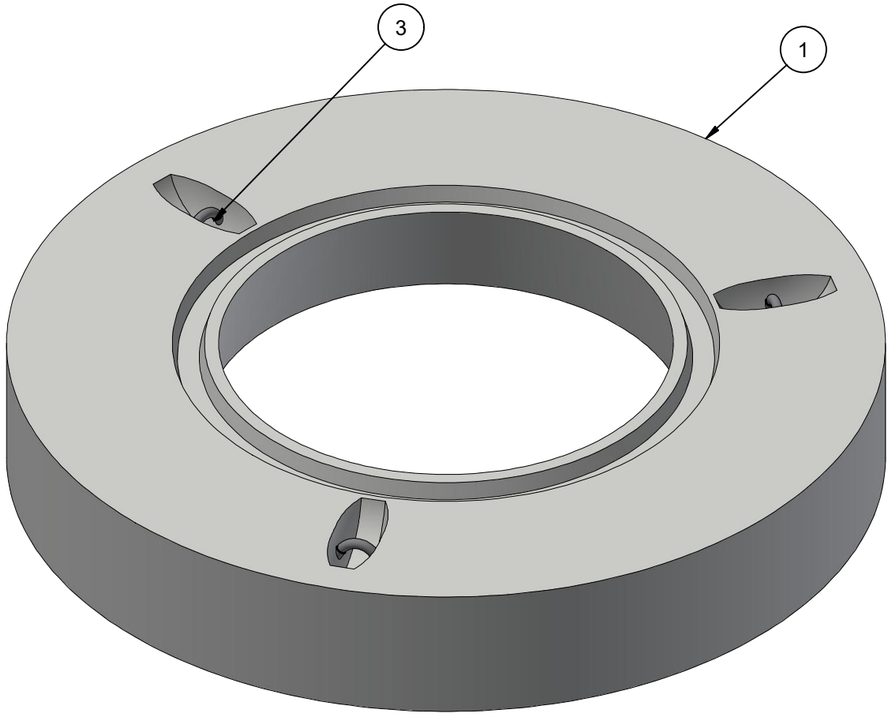

ISOMETRIC VIEW

LIFTING NOTES
■ THIS CONCRETE PRODUCT IS DESIGNED TO BE LIFTED AT 2500 PSI WITH 3 LIFT CONNECTIONS EQUALLY LOADED TO 3 LIFTING POINTS AT A MINIMUM 60° SLING ANGLE, MEASURED FROM HORIZONTAL.

BURY DEPTH:	0.0' - 5.0' to Top		
WATER LEVEL:	0.0'	WEIGHT:	1129.04 Lbs
DESIGN SPEC:	ASTM C890,ACI 318	LOADING SPEC:	A-16 (AASHTO HS20-44)
REINFORCEMENT TYPE:	Rebar	LIFTING TYPE:	A-Anchor

JENSEN PRECAST EST. 1968

WWW.JENSENPRECAST.COM

©2019 Jensen Precast- All rights reserved.
All materials appearing as Jensen Precast documents and the like are proprietary work product and are protected under U.S. copyright and other laws.
Unless in conjunction with business conducted with Jensen Precast, any use of Jensen Precast work product without express, written consent is prohibited, and recipient is prohibited from distributing any and all work product to non-approved third parties under penalty of civil action.

REVISION HISTORY			
REV	DESCRIPTION	DATE	BY
A	INITIAL RELEASE	06/12/2019	MDD
B	NOT SPECIFIED		
C	CHANGED LIFTING TO UTILITY ANCHORS	12/07/2020	VGL

DESCRIPTION:	Manhole D4858x9.25 Flat Top TU 30"C CASTING LAYOUT			REV: C-1
PART NUMBER:	200022552	DRAWN BY:	V. Lund	SHEET: 1 OF 2
CREATED:	6/12/2019	MODIFIED:	7/22/2022	

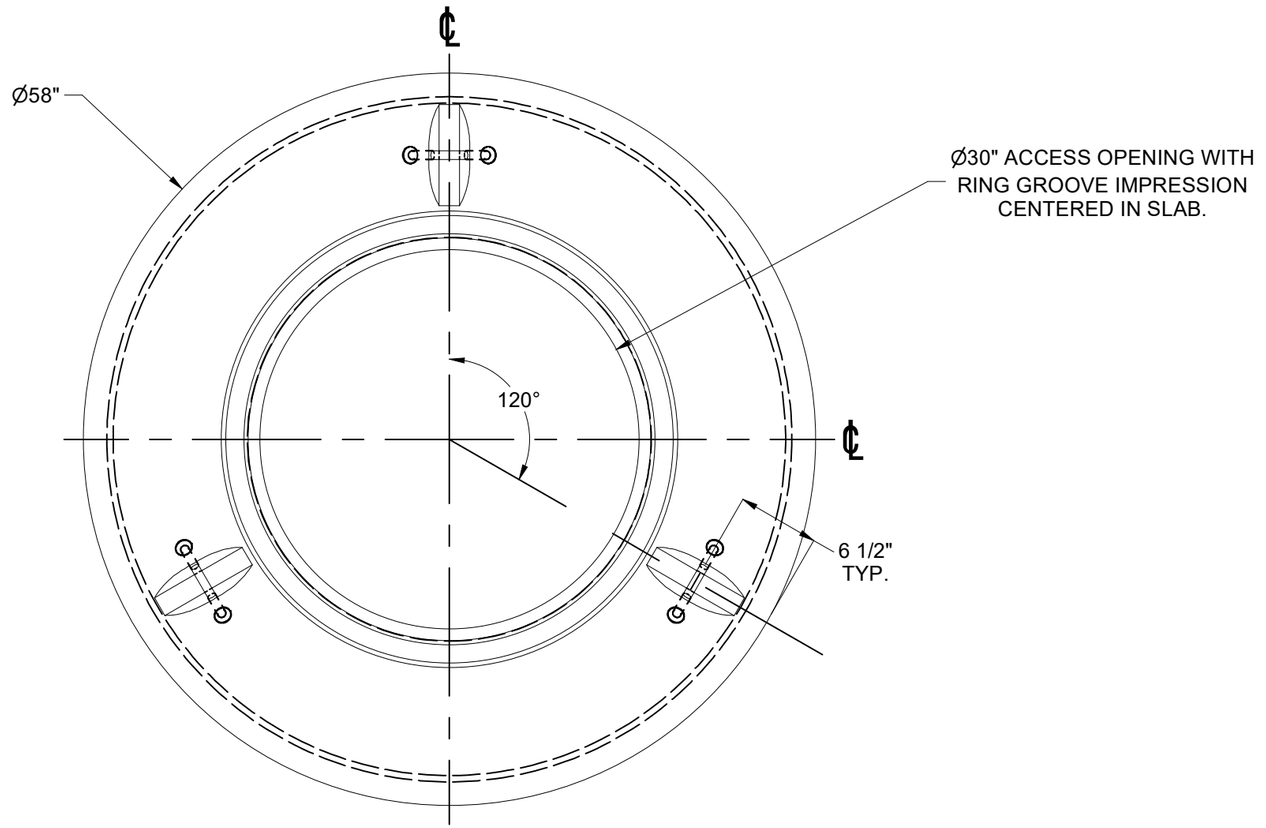

PLAN VIEW

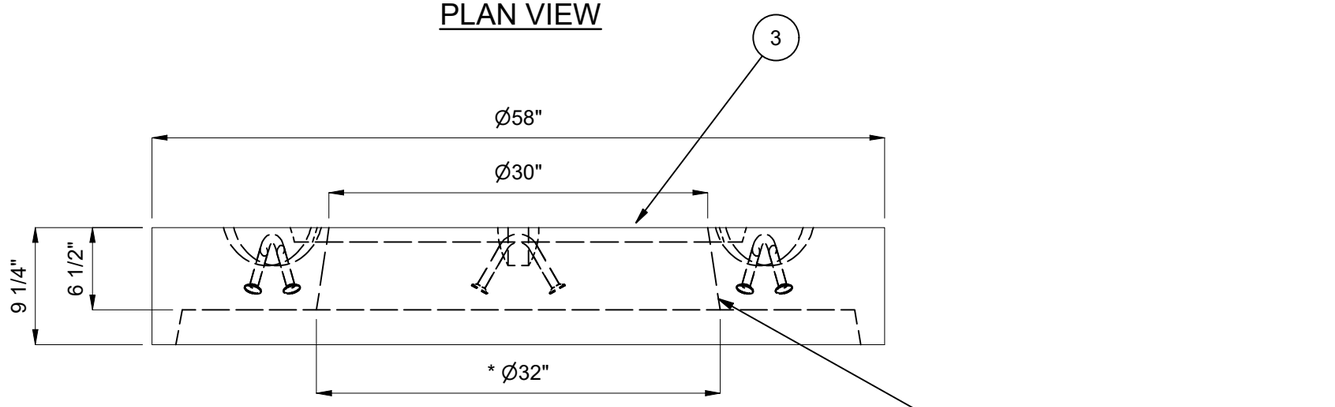

SECTION VIEW

200022552.idw

BURY DEPTH:	0.0' - 5.0' to Top		
WATER LEVEL:	0.0'	WEIGHT:	1129.04 Lbs
DESIGN SPEC:	ASTM C890,ACI 318	LOADING SPEC:	A-16 (AASHTO HS20-44)
REINFORCEMENT TYPE:	Rebar	LIFTING TYPE:	A-Anchor

JENSEN PRECAST EST. 1968

WWW.JENSENPRECAST.COM

©2019 Jensen Precast- All rights reserved.
All materials appearing as Jensen Precast documents and the like are proprietary work product and are protected under U.S. copyright and other laws.
Unless in conjunction with business conducted with Jensen Precast, any use of Jensen Precast work product without express, written consent is prohibited, and recipient is prohibited from distributing any and all work product to non-approved third parties under penalty of civil action.

DESCRIPTION:	Manhole D4858x9.25 Flat Top TU 30"C CASTING DRAWING		REV: C-1
PART NUMBER:	200022552	DRAWN BY:	V. Lund
CREATED:	6/12/2019	MODIFIED:	7/22/2022
			SHEET: 2 OF 2