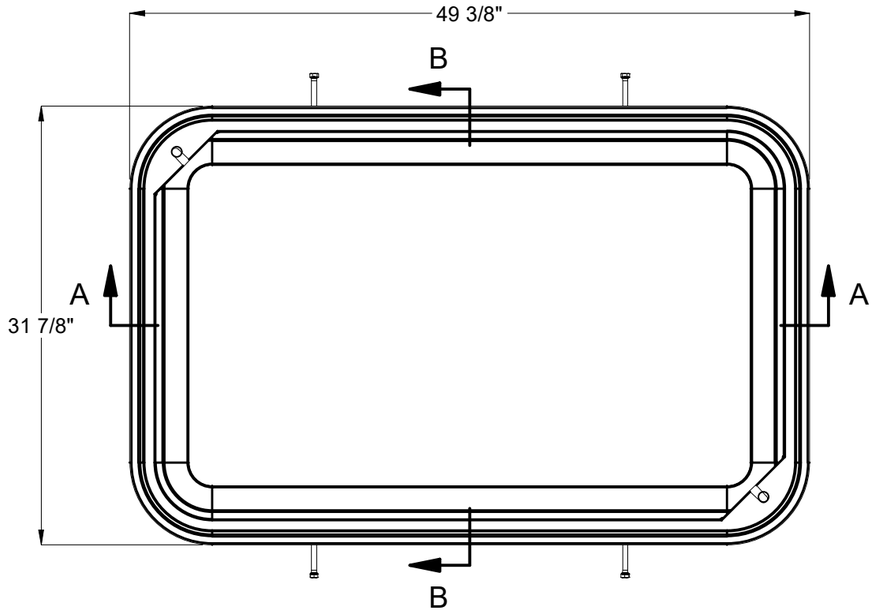

BILL OF MATERIALS

ITEM	UNIT QTY	QTY	PART NUMBER	DESCRIPTION
1	2.750 ft^3	2.750 ft^3	100035038	CONCRETE COMPOSITE BOX MIX BRUCE
2	1	2	100021840	SQUARE NUT 1/2-13 304SS
3	1	4	100002783	INSERT THREADED METAL 3/8-16 UNC 1IN
4	1	2	100022548	HPC PLUGS 5/8X1-3/8-14-2 PE-LD67 BLK
5	1	4	100004353	Hex Bolt 3/8-16 UNC 304SS - FT - 3"

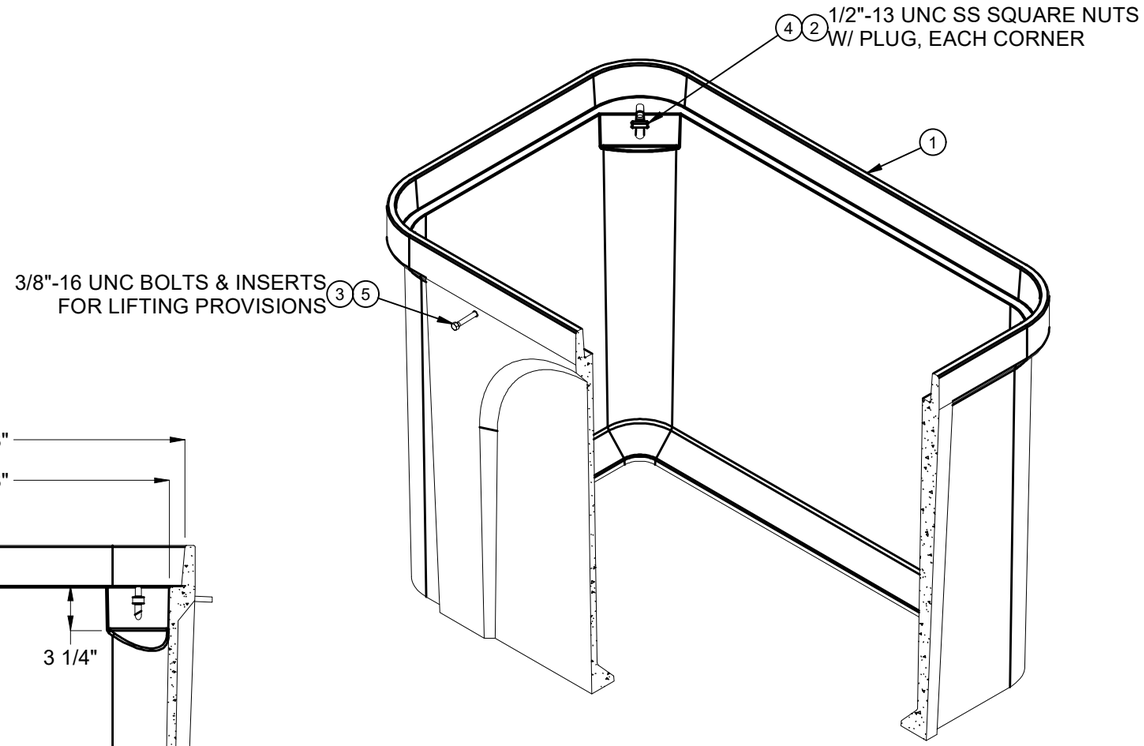

ISO BREAKOUT VIEW

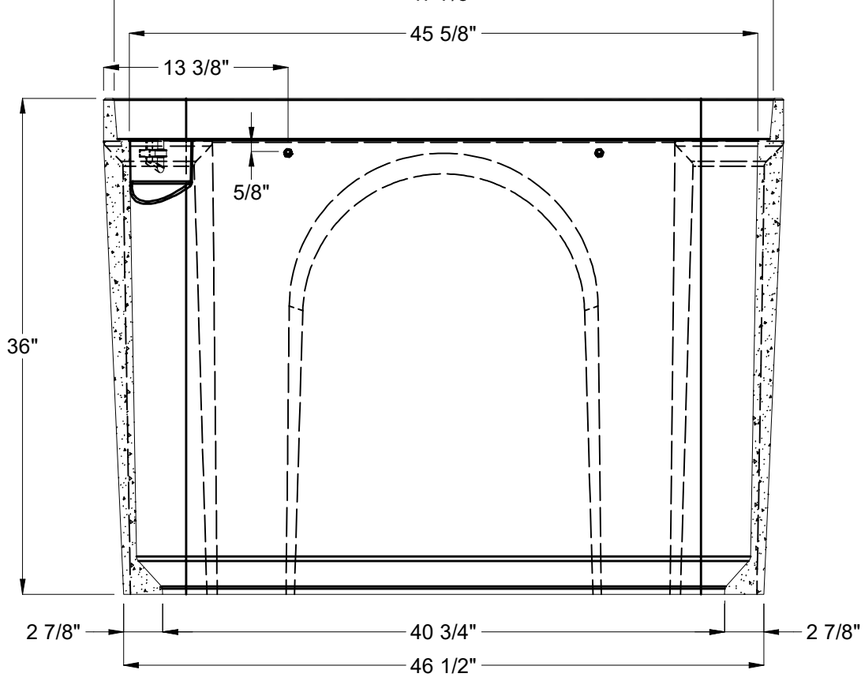

SECTION A-A

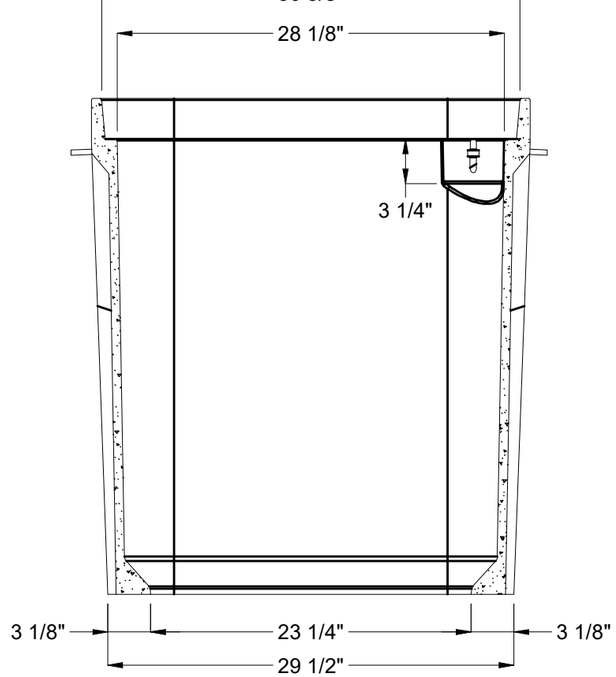

SECTION B-B

REVISION HISTORY			
REV	DESCRIPTION	DATE	BY
1	INITIAL RELEASE	6/23/2020	B. EVANS
2	BOLT-DOWN PLUGS UPDATED W/ NEW PART	10/8/2026	M.B.

PALLET QUANTITY:	2	APPROX. WEIGHT:	336.02 lbs
CERTIFICATION:		DESIGN/TEST LOAD:	22.5/33.75 kip
DESIGN SPEC:	ANSI/SCTE-77	LOADING SPEC:	Tier-22
AGENCY:		AGENCY SPEC:	

Infrastructure JENSEN
WWW.JENSENINFRASTRUCTURE.COM

©2026 Jensen Infrastructure - All rights reserved.
All materials appearing as Jensen Infrastructure documents and the like are proprietary work product and are protected under U.S. copyright and other laws.
Unless in conjunction with business conducted with Jensen Infrastructure any use of Jensen Infrastructure work product without express, written consent is prohibited, and recipient is prohibited from distributing any and all work product to non-approved third parties under penalty of civil action. This product shall only be produced in a Jensen Infrastructure facility.

DESCRIPTION:	HPC 3048x36 Polymer Box 1/2-13 SS Nut		REV: C-1-1
PART #:	200022268	DRAWN BY: M. Baumann	SHEET: 1 OF 1
CREATED:	3/11/2019	MODIFIED: 10/8/2026	

200022268.idw