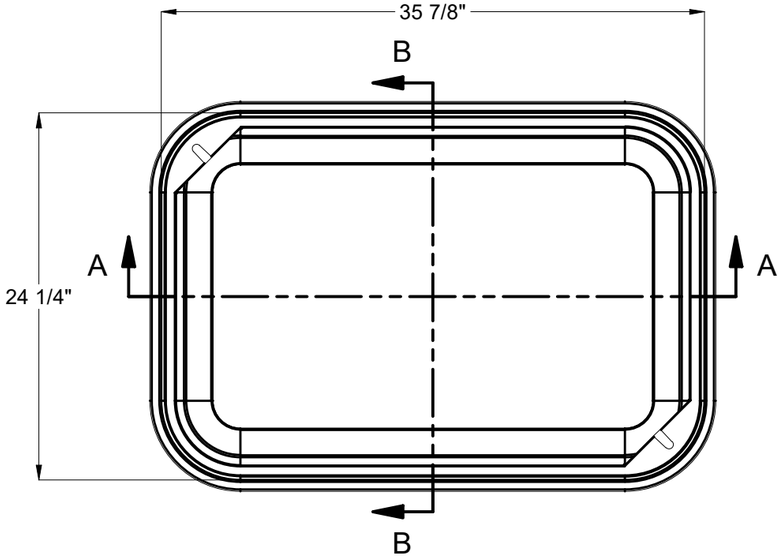

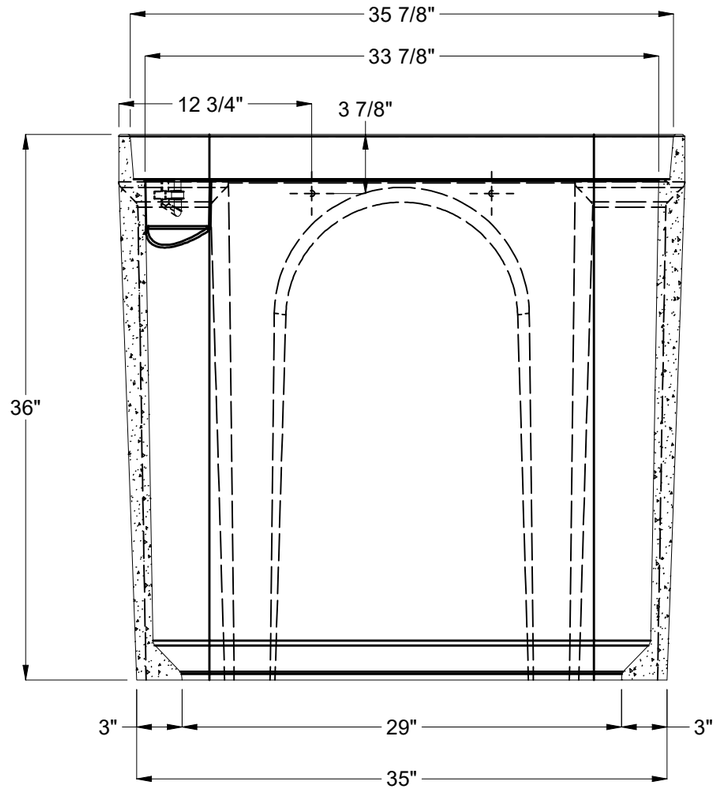

SECTION A-A

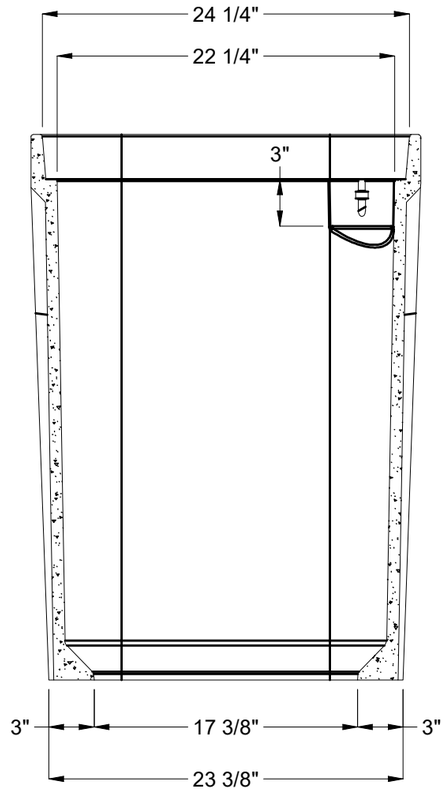

SECTION B-B

BILL OF MATERIALS				
ITEM	UNIT QTY	QTY	PART NUMBER	DESCRIPTION
1	1.996 ft^3	1.996 ft^3	100035038	CONCRETE COMPOSITE BOX MIX BRUCE
2	1	2	100022548	HPC PLUGS 5/8X1-3/8-14-2 PE-LD67 BLK
3	1	2	100021840	SQUARE NUT 1/2-13 304SS
4	1	4	100002783	INSERT THREADED METAL 3/8-16 UNC 1IN

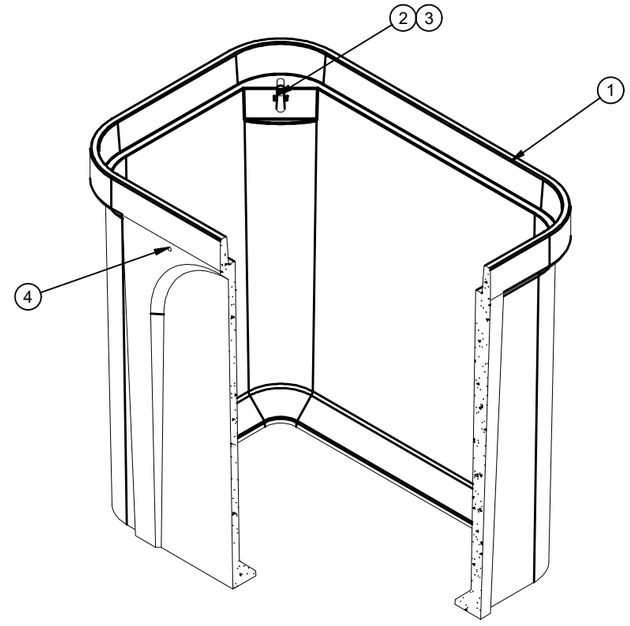

200022186.idw

REVISION HISTORY			
REV	DESCRIPTION	DATE	BY
A	INITIAL RELEASE	10/27/2022	T. Larson

DESIGN SPEC: ANSI/SCTE-77	APPROX. WEIGHT: 243.99 lbs		
AGENCY:	DESIGN/TEST LOAD: 22.5/33.75 kip		
AGENCY SPEC:	LOADING SPEC: Tier-22		

JENSEN PRECAST EST. 1968

©2025 Jensen Precast- All rights reserved.
Unless expressly authorized by Jensen Precast any use or duplication is strictly prohibited under penalty of civil action or codes.

DESCRIPTION: HPC 2436x36 Polymer Box 1/2-13 SS Nut

REV: B-1

PART #:	200022186	DRAWN BY:	M. Baumann
CREATED:	6/7/2019	MODIFIED:	6/11/2025

SHEET: 1 OF 1