DESIGN NOTES:

- CONCRETE SHALL HAVE A 28 DAY MINIMUM COMPRESSIVE STRENGTH OF 5000 PSI
- SOIL UNIT WEIGHT DRY - 110 lbs/cu.ft.
- EQUIVALENT LATERAL PRESSURE DRY - 40 lbs/cu.ft.
- SOIL UNIT WEIGHT WET - 120 lbs/cu.ft.
- EQUIVALENT LATERAL PRESSURE WET - 80 lbs/cu.ft.

PRODUCTION NOTES:

- THIS PRODUCT SHALL ONLY BE PRODUCED IN A JENSEN INFRASTRUCTURE FACILITY
- LIFTING INSERTS SHALL BE INSTALLED PER MANUFACTURER'S REQUIREMENTS
- APPLIED FINISH - NONE
- INTERNAL LINER/COATING - NONE
- EXTERNAL LINER/COATING - NONE

BILL OF MATERIALS

ITEM	UNIT QTY	QTY	PART NUMBER	DESCRIPTION
1	1	1	200014220	DAS1-SD-1730-D5-TRX-G-BD-PG&E
2	1	4	100002584	PENTA COIL BOLT 1/2 x 1-1/2 SS
3	1	4	100022230	DISC-LOCK WASHER 1/2 SS GLUED
4	1	4	100003350	INS THRD FRL THNSLB STRUT FX-16 7/8IN ZINC
5	1	1	200014255	FAS-1730-CD5-G-PG&E-OH03
6	3.208 ft^3	3.208 ft^3	100011425	CONCRETE MIX GENERIC 5000 PSI
7	1	1	300121175	REINFORCING MAT 300121175
8	1	1	100014408	NAME PLATE CAST ALUM PG&E - ELECTRIC
9	1	2	100007131	Bolt Socket Flat Countersunk Head - 1/2-13 UNC - 304SS - FT - 1"

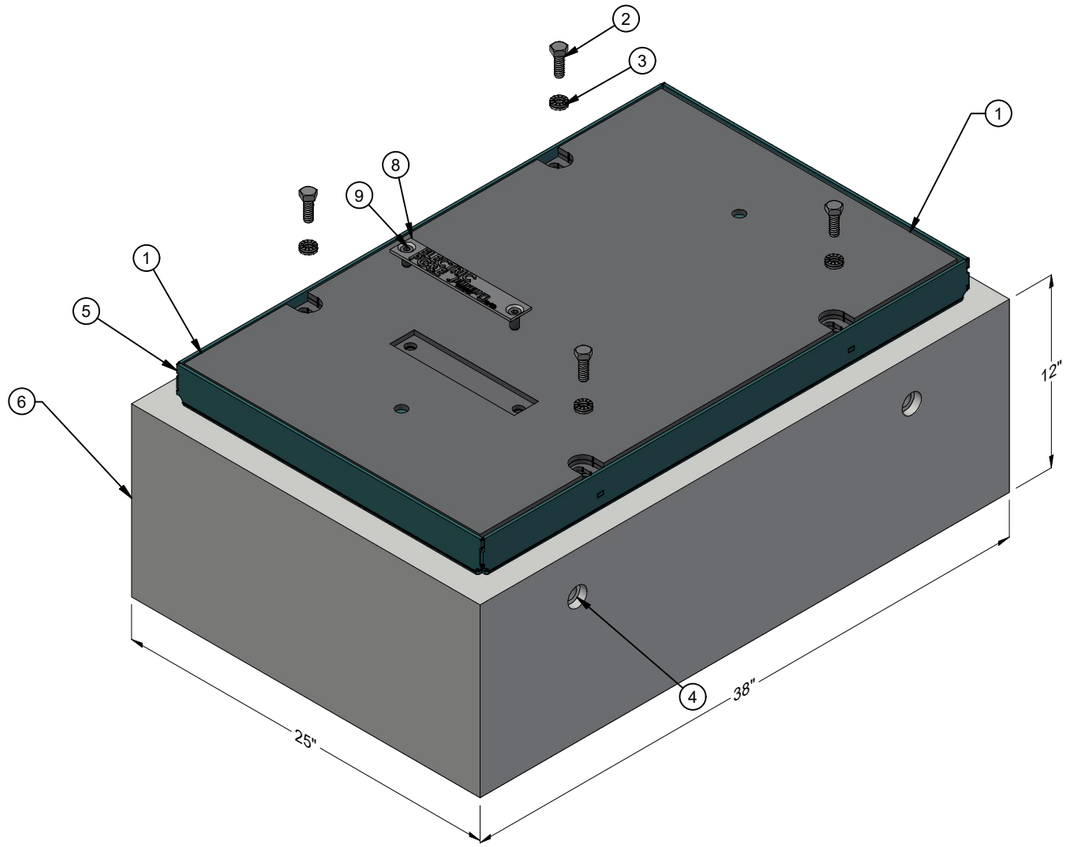

ISO REF

200022096.idw

CHANGE HISTORY			
NO.	DESCRIPTION	DATE	BY
A	INITIAL RELEASE	7/30/2019	L. Fuller
B	CONSOLODATION OF PRODUCTS	6/13/2022	A. Sprung
C	CONSOLIDATED MULTIPLE COMPONENTS INTO SINGLE PART	5/29/26	AB
D	ADDED PG&E NAMEPALTE AND BOLTS	11/5/26	AB

BURY DEPTH:	0.0' - 3.0' to Top		
WATER LEVEL:	2.0'	APPROX. WEIGHT:	614.95 Lbs
DESIGN SPEC:	ACI 318,ASTM C857	LOADING SPEC:	A-16 (AASHTO HS20-44)
REINFORCEMENT TYPE:	Rebar	LIFTING TYPE:	Insert

Infrastructure
JENSEN
WWW.JENSENINFRASTRUCTURE.COM

©2026 Jensen Infrastructure - All rights reserved.
All materials appearing as Jensen Infrastructure documents and the like are proprietary work product and are protected under U.S. copyright and other laws.
Unless in conjunction with business conducted with Jensen Infrastructure , any use of Jensen Infrastructure work product without express, written consent is prohibited, and recipient is prohibited from distributing any and all work product to non-approved third parties under penalty of civil action.
This product shall only be produced in a Jensen Infrastructure facility.

DESCRIPTION: Top Riser 1730x12 Cast-In Frame and Cover

CASTING LAYOUT

REV: C-1-2

PART NUMBER:	200022096	DRAWN BY:	A. Sprung
CREATED:	4/29/2019	MODIFIED:	11/5/2026

SHEET: 1 OF 2

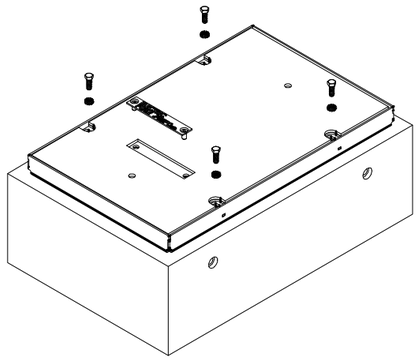

ISO REF

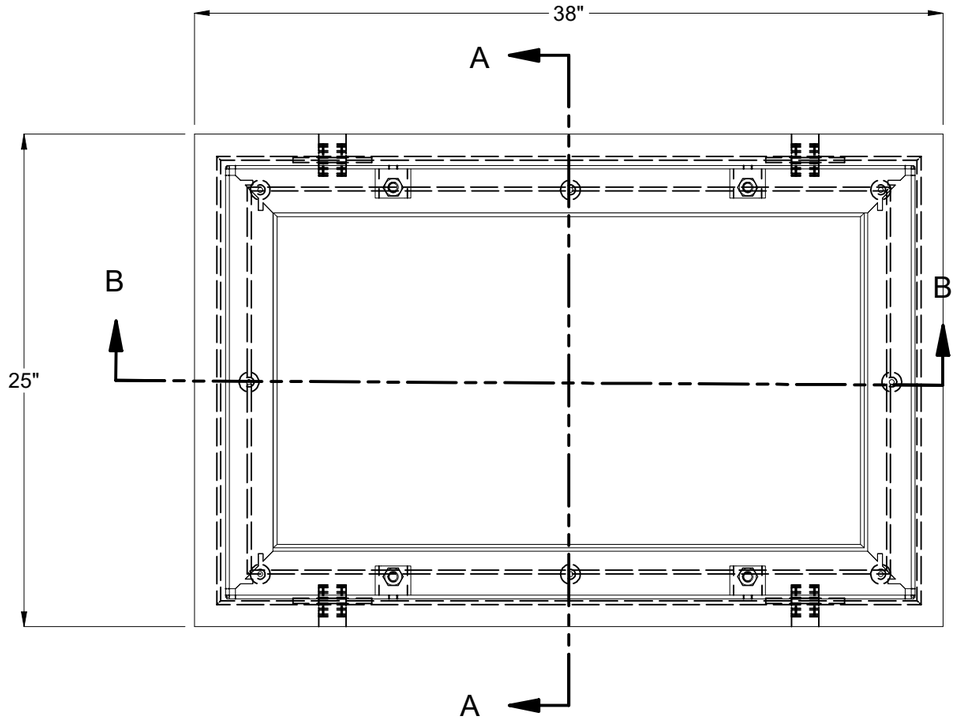

PLAN VIEW

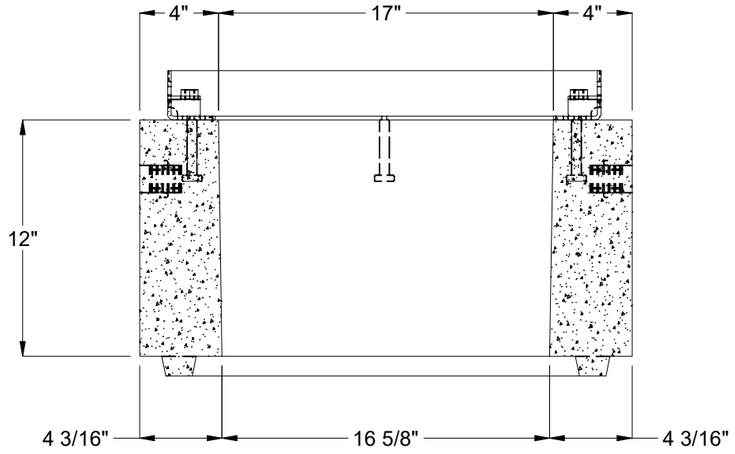

SECTION A-A

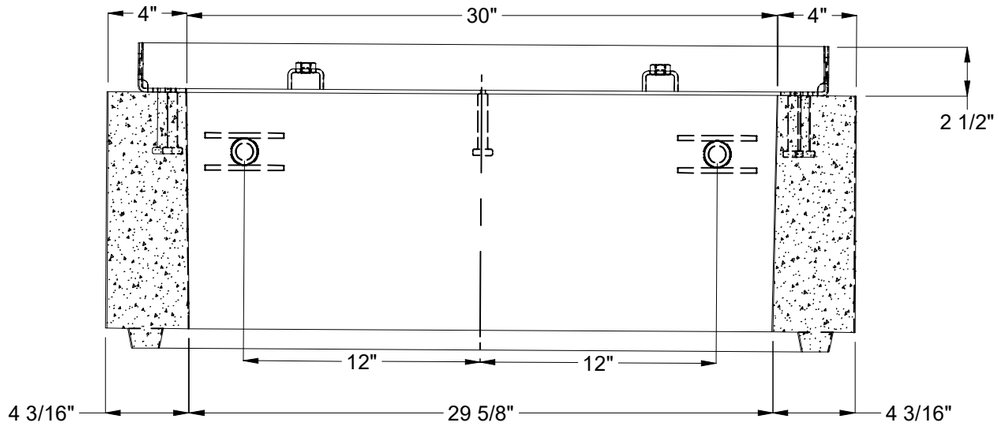

SECTION B-B

BURY DEPTH:	0.0' - 3.0' to Top		
WATER LEVEL:	2.0'	APPROX. WEIGHT:	614.95 Lbs
DESIGN SPEC:	ACI 318,ASTM C857	LOADING SPEC:	A-16 (AASHTO HS20-44)
REINFORCEMENT TYPE:	Rebar	LIFTING TYPE:	Insert

Infrastructure
JENSEN
WWW.JENSENINFRASTRUCTURE.COM

©2026 Jensen Infrastructure - All rights reserved.
All materials appearing as Jensen Infrastructure documents and the like are proprietary work product and are protected under U.S. copyright and other laws.
Unless in conjunction with business conducted with Jensen Infrastructure , any use of Jensen Infrastructure work product without express, written consent is prohibited, and recipient is prohibited from distributing any and all work product to non-approved third parties under penalty of civil action.
This product shall only be produced in a Jensen Infrastructure facility.

DESCRIPTION:	Top Riser 1730x12 Cast-In Frame and Cover CASTING DRAWING		REV: C-1-2
PART NUMBER:	200022096	DRAWN BY:	A. Sprung
CREATED:	4/29/2019	MODIFIED:	11/5/2026
			SHEET: 2 OF 2

200022096.idw