NOTES
■ FOR COMPLETE DESIGN AND PRODUCT INFORMATION CONTACT JENSEN PRECAST.

BILL OF MATERIALS

ITEM	UNIT QTY	QTY	PART NUMBER	DESCRIPTION
1	4.396 ft^3	4.396 ft^3	100011425	CONCRETE MIX GENERIC 5000 PSI
2	1	4	100002766	Insert Ferrule Loop 0.625 x 3.5" Zinc (F42 or Equiv.)
3	1	1	300121450	REINFORCING MAT 300121450

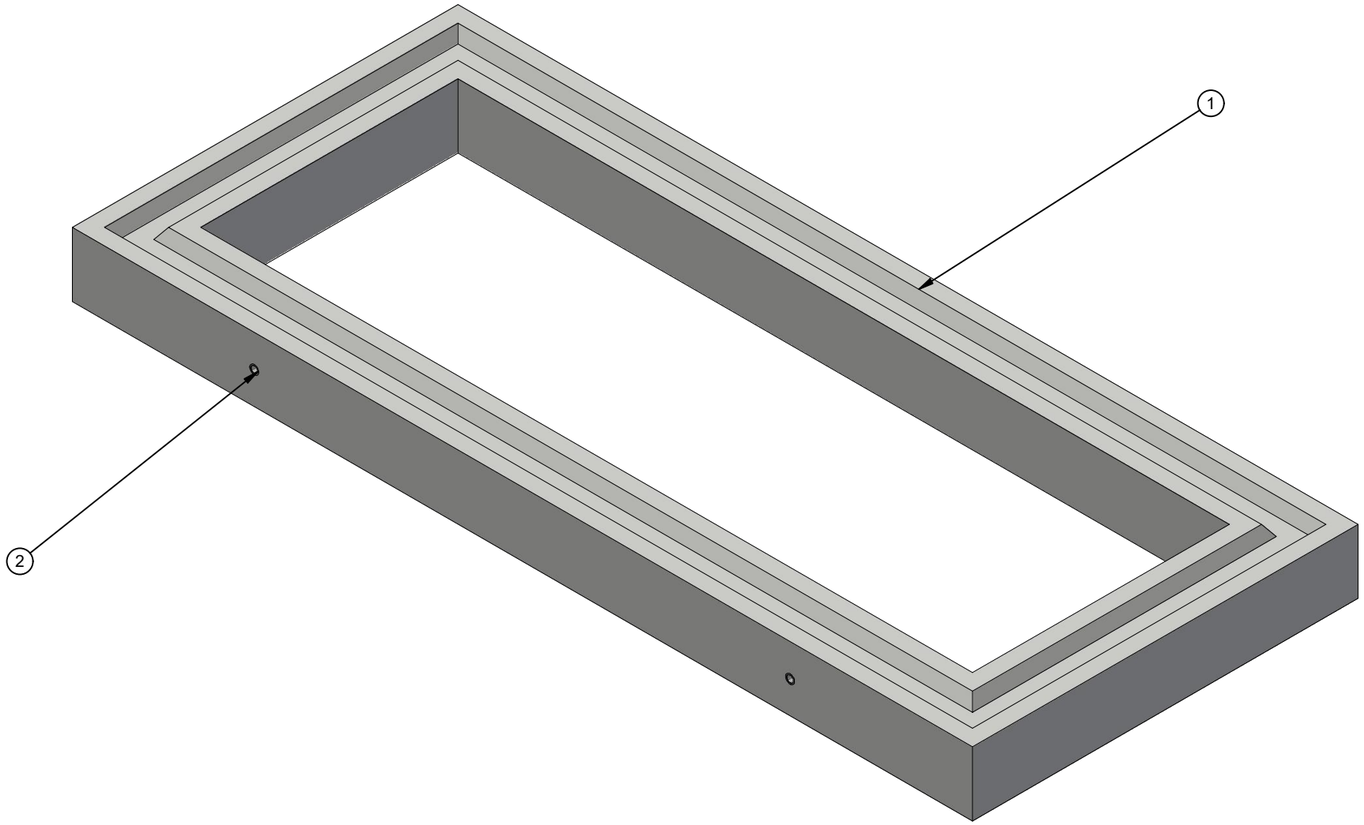

ISO LAYOUT

200021652.idw

LIFTING NOTES
■ THIS CONCRETE PRODUCT IS DESIGNED TO BE LIFTED AT 3000 PSI WITH 4 LIFT CONNECTIONS EQUALLY LOADED TO 4 LIFTING POINTS AT A MINIMUM 90° SLING ANGLE, MEASURED FROM HORIZONTAL.

BURY DEPTH:	0.0' - 5.5' to Top		
WATER LEVEL:	5.0'	WEIGHT:	661.66 Lbs
DESIGN SPEC:	ASTM C890,ACI 318	LOADING SPEC:	A-16 (AASHTO HS20-44)
REINFORCEMENT TYPE:	Rebar	LIFTING TYPE:	Insert

JENSEN PRECAST EST. 1968

WWW.JENSENPRECAST.COM

©2019 Jensen Precast- All rights reserved.
All materials appearing as Jensen Precast documents and the like are proprietary work product and are protected under U.S. copyright and other laws.
Unless in conjunction with business conducted with Jensen Precast, any use of Jensen Precast work product without express, written consent is prohibited, and recipient is prohibited from distributing any and all work product to non-approved third parties under penalty of civil action.

REVISION HISTORY			
REV	DESCRIPTION	DATE	BY
A	INITIAL RELEASE - 1905-17489-NNV	05/30/19	ACHO

DESCRIPTION:	Riser 2472x6 Rect. Riser CASTING LAYOUT		REV: A-1-1
PART NUMBER:	200021652	DRAWN BY: ACHO	SHEET: 1 OF 2
CREATED:	5/29/2019	MODIFIED: 5/7/2021	

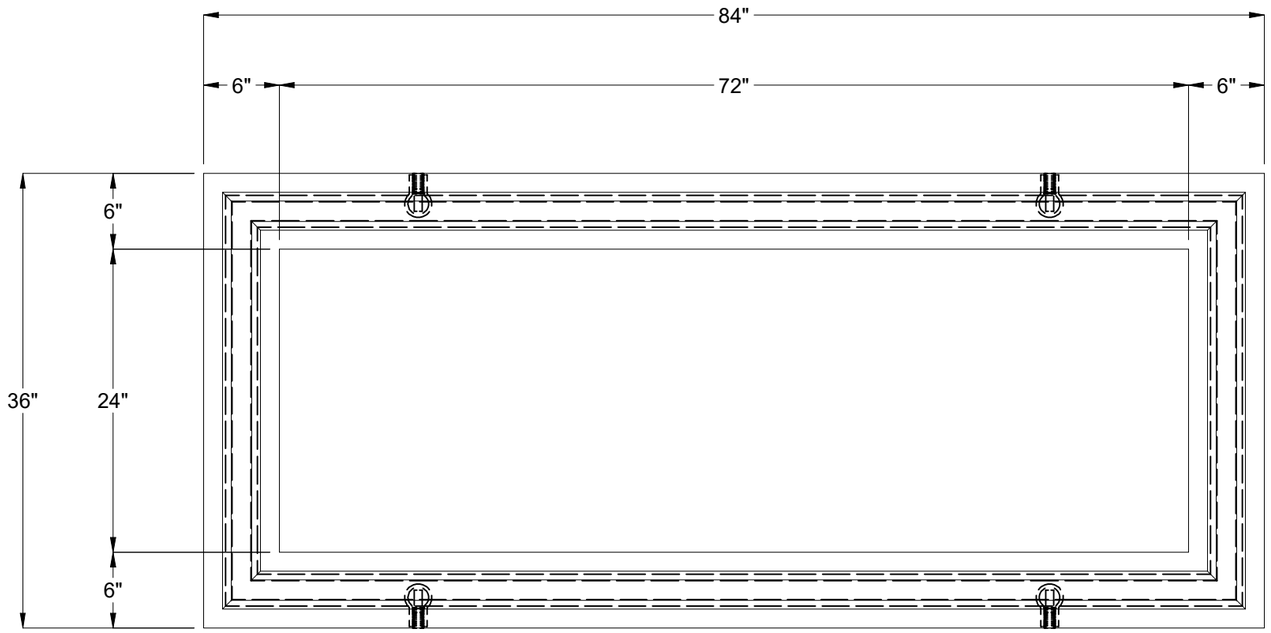

PLAN VIEW

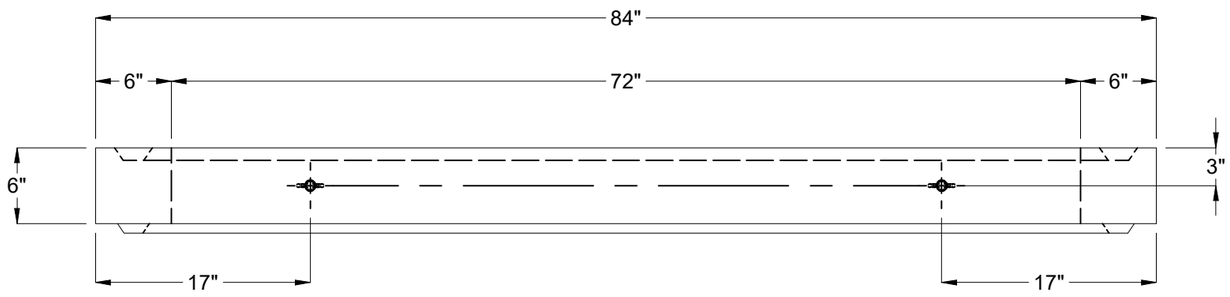

SIDE ELEVATION VIEW

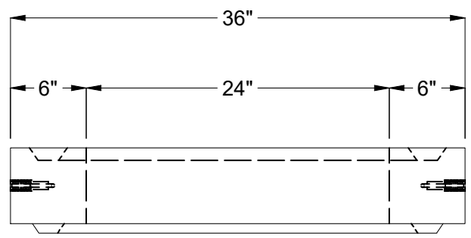

ELEVATION VIEW

BURY DEPTH:	0.0' - 5.5' to Top		
WATER LEVEL:	5.0'	WEIGHT:	661.66 Lbs
DESIGN SPEC:	ASTM C890,ACI 318	LOADING SPEC:	A-16 (AASHTO HS20-44)
REINFORCEMENT TYPE:	Rebar	LIFTING TYPE:	Insert

JENSEN PRECAST EST. 1968

WWW.JENSENPRECAST.COM

©2019 Jensen Precast- All rights reserved.
All materials appearing as Jensen Precast documents and the like are proprietary work product and are protected under U.S. copyright and other laws.
Unless in conjunction with business conducted with Jensen Precast, any use of Jensen Precast work product without express, written consent is prohibited, and recipient is prohibited from distributing any and all work product to non-approved third parties under penalty of civil action.

DESCRIPTION:	Riser 2472x6 Rect. Riser CASTING DRAWING		REV: A-1-1
PART NUMBER:	200021652	DRAWN BY:	ACHO
CREATED:	5/29/2019	MODIFIED:	5/7/2021
			SHEET: 2 OF 2

200021652.idw