DESIGN NOTES:

- CONCRETE SHALL HAVE A 28 DAY MINIMUM COMPRESSIVE STRENGTH OF 5000 PSI
- SOIL UNIT WEIGHT DRY - 110 lbs/cu.ft.
- EQUIVALENT LATERAL PRESSURE DRY - 66 lbs/cu.ft.
- SOIL UNIT WEIGHT WET - 120 lbs/cu.ft.
- EQUIVALENT LATERAL PRESSURE WET - 94 lbs/cu.ft.

PRODUCTION NOTES:

- THIS PRODUCT SHALL ONLY BE PRODUCED IN A JENSEN PRECAST FACILITY
- LIFTING INSERTS SHALL BE INSTALLED PER MANUFACTURER'S REQUIREMENTS
- APPLIED FINISH - NONE
- INTERNAL LINER/COATING - NONE
- EXTERNAL LINER/COATING - NONE

BILL OF MATERIALS

ITEM	UNIT QTY	QTY	PART NUMBER	DESCRIPTION
1	75.534 ft^3	75.534 ft^3	100011425	CONCRETE MIX GENERIC 5000 PSI
2	1	1	300121398	REINFORCING MAT 300121398
3	1	4	100004660	PULL IRON OFFSET B783519 3.5H X 19L X.875DIA GALV
4	1	2	100024063	GROUND CLAMP BRONZE 1/2-1 BLACKBURN TYPE J
5	1	2	100005932	INSERT GROUND BRONZE BOTTLE ROCKET 1/2-13 UNC WITH 11IN COPPER ROD 12H69 W/0.25 ORANGE TOGGLE INSERT
6	1	8	100004878	ANCHOR UTILITY .671DIA 5-SLAB GALV P75 5UA671
7	1	6	100007286	TERMINATOR DUCT WITH SEAL 3IN T3001
8	1	20	100003015	TERMINATOR DUCT WITH SEAL 4.5IN T4501

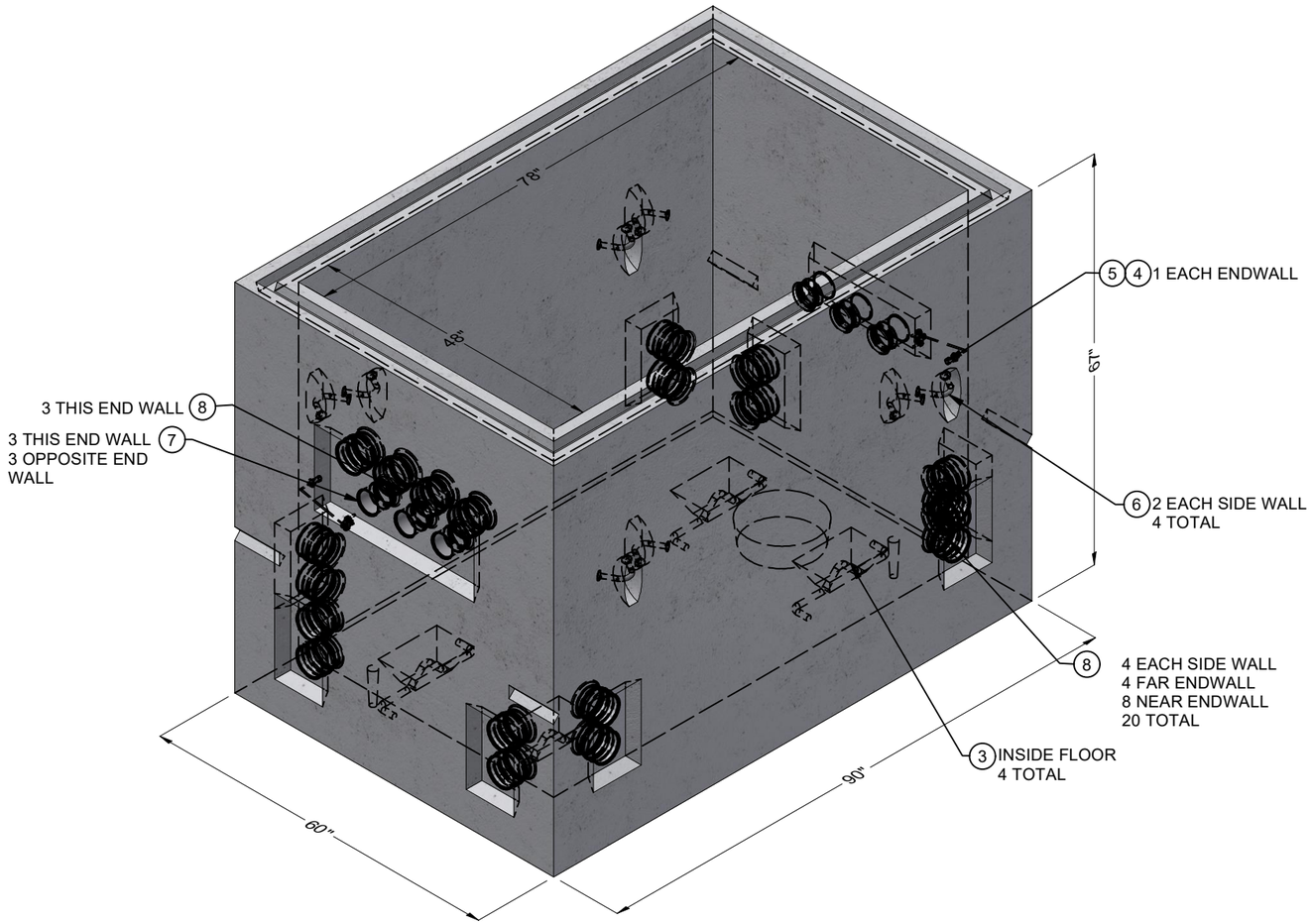

ISO REF

LIFTING NOTES
■ THIS CONCRETE PRODUCT IS DESIGNED TO BE LIFTED AT 2500 PSI WITH 4 LIFT CONNECTIONS EQUALLY LOADED TO 4 LIFTING POINTS AT A MINIMUM 60° SLING ANGLE, MEASURED FROM HORIZONTAL.
*All rigging shall be design by a qualified professional. Loading diagrams show illustrations of possible rigging setups to achieve the required sling angle and load leg equalization. Other valid rigging configurations are possible. A qualified professional must be consulted prior to lifting.

RIGGING DIAGRAM*	C

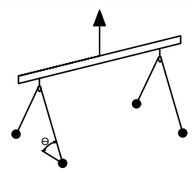

CHANGE HISTORY			
NO.	DESCRIPTION	DATE	BY
1	INITIAL DRAWING 1905-17329-NCA	5-23-19	EDC
2	PG&E REVISIONS	1-6-2020	AS
3	PULLING IRONS CHANGED, KEYWAY INCREASED HEIGHT, AND DOGBONES CHANGED	3-10-2020	AS
4	UPDATE TO PANS ADDED PER PG&E AND ADDED DETAILS	1-5-2023	APS
5	SWAPPED SHORT TERM WITH REG	4-3-2026	AB

BURY DEPTH:	0.0' - 3.0' to Top		
WATER LEVEL:	2.0'	APPROX. WEIGHT:	11582.3 Lbs
DESIGN SPEC:	ACI 318,ASTM C857	LOADING SPEC:	A-16 (AASHTO HS20-44)
REINFORCEMENT TYPE:	Rebar	LIFTING TYPE:	Dogbone

Infrastructure
JENSEN
WWW.JENSENINFRASTRUCTURE.COM

©2026 Jensen Infrastructure - All rights reserved.
All materials appearing as Jensen Infrastructure documents and the like are proprietary work product and are protected under U.S. copyright and other laws.
Unless in conjunction with business conducted with Jensen Infrastructure , any use of Jensen Infrastructure work product without express, written consent is prohibited, and recipient is prohibited from distributing any and all work product to non-approved third parties under penalty of civil action.
This product shall only be produced in a Jensen Infrastructure facility.

DESCRIPTION:	Vault 4878x60 Rect. Bottom Section Terminators Sump PG&E 04-1567 CASTING LAYOUT		REV: D-6-1
PART NUMBER:	200021403	DRAWN BY:	A.Sprung
CREATED:	5/23/2019	MODIFIED:	8/3/2026
			SHEET: 1 OF 2

200021403.idw

FEATURES		
ID	DESCRIPTION	QTY
A	28"(X) x 12"(Y) x 2.00" Deep Recess	1
B	20"(X) x 6"(Y) x 2.00" Deep Recess	1
C	7"(X) x 12"(Y) x 2.00" Deep Recess	8

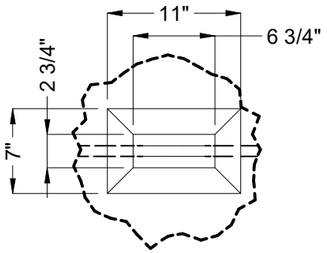

DETAIL E

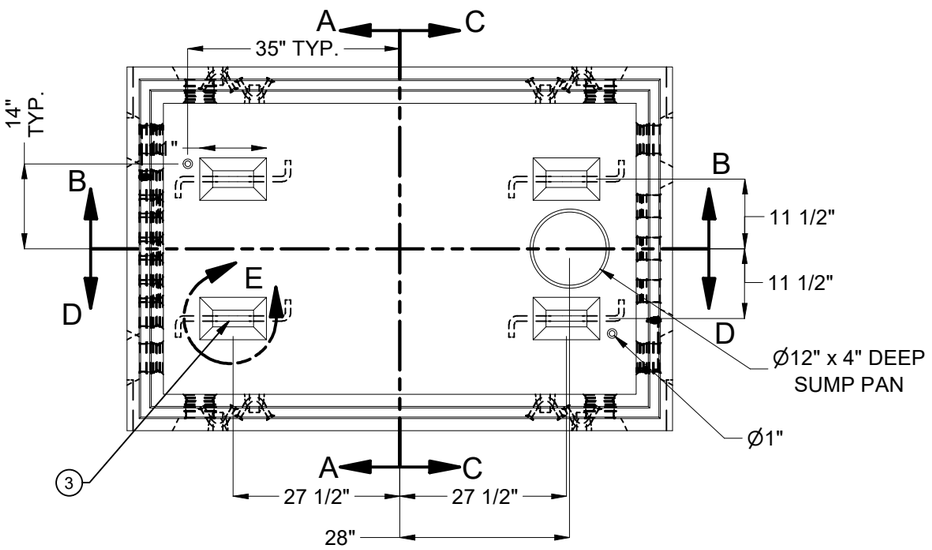

PLAN VIEW

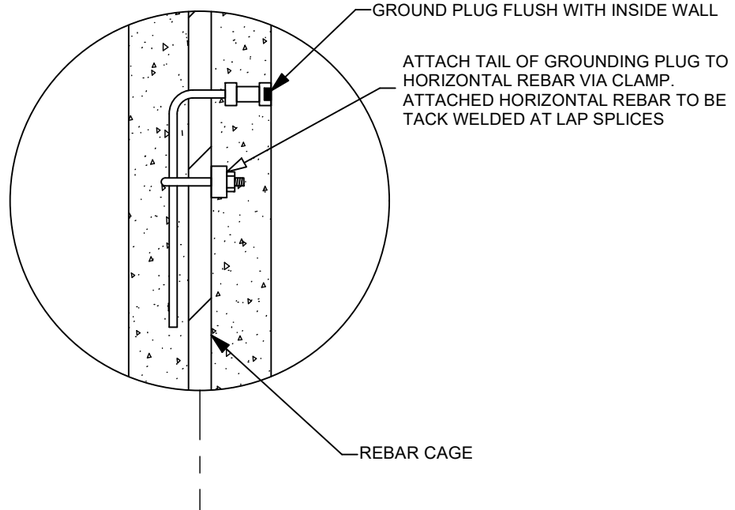

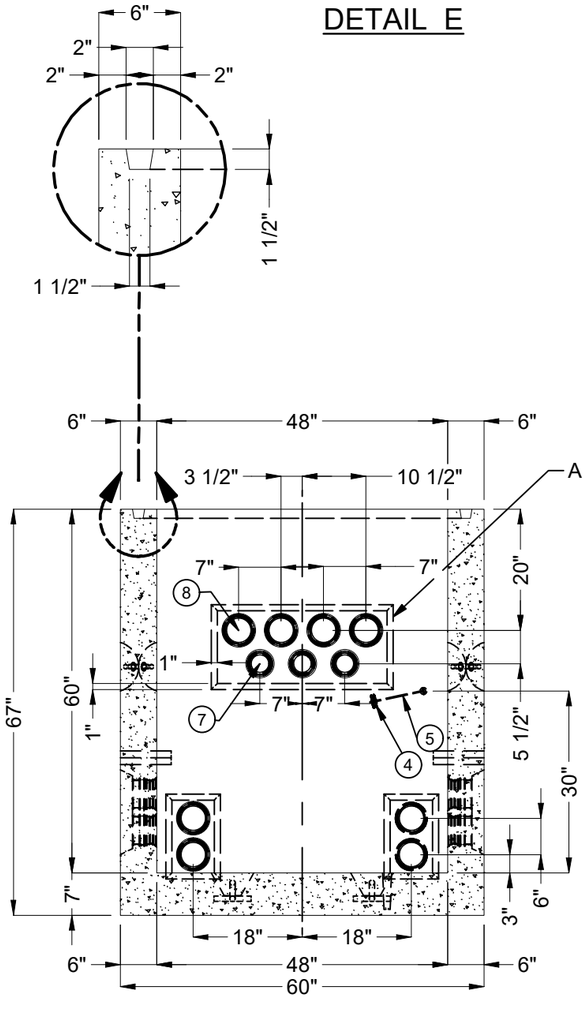

SECTION A-A

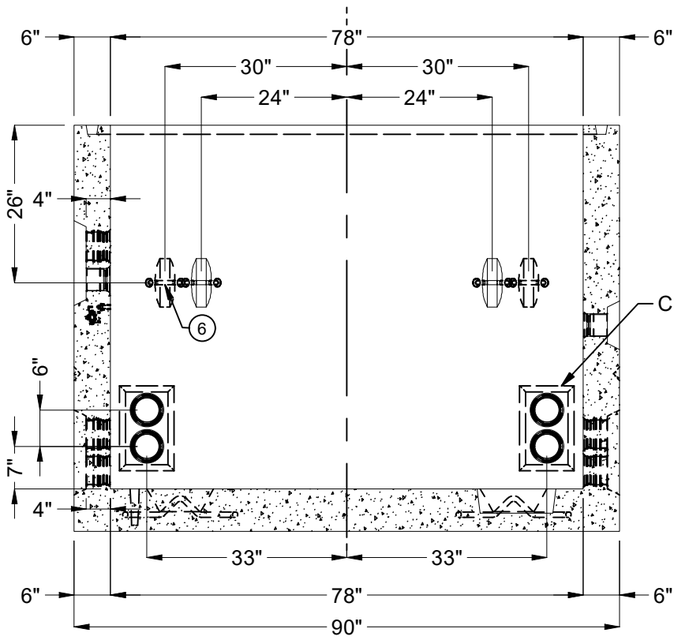

SECTION B-B

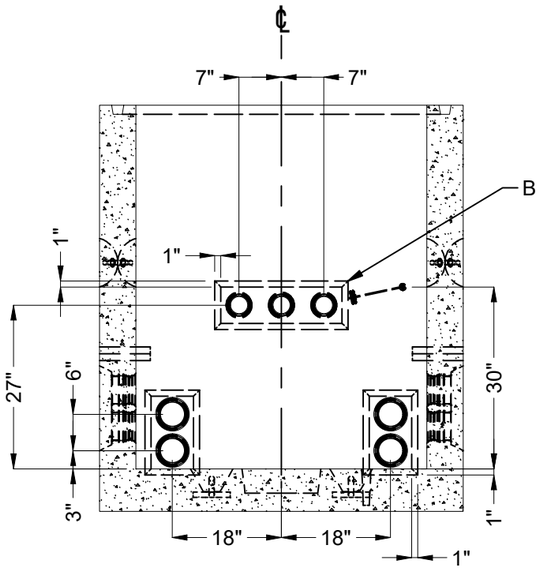

SECTION C-C

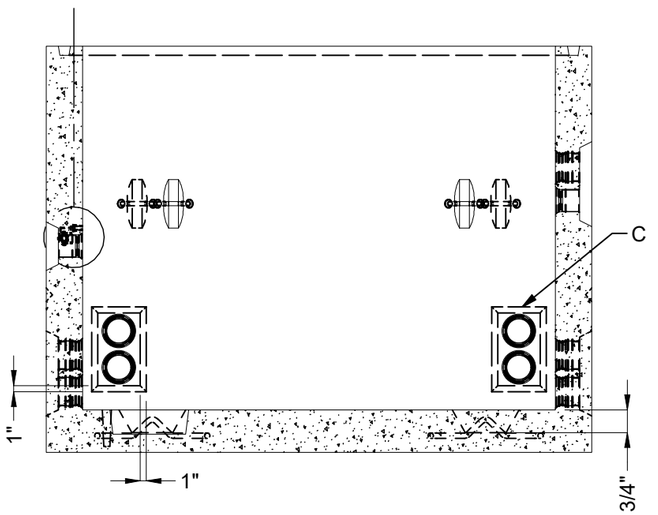

SECTION D-D

BURY DEPTH:	0.0' - 3.0' to Top		
WATER LEVEL:	2.0'	APPROX. WEIGHT:	11582.3 Lbs
DESIGN SPEC:	ACI 318,ASTM C857	LOADING SPEC:	A-16 (AASHTO HS20-44)
REINFORCEMENT TYPE:	Rebar	LIFTING TYPE:	Dogbone

Infrastructure
JENSEN
WWW.JENSENINFRASTRUCTURE.COM

©2026 Jensen Infrastructure - All rights reserved.
All materials appearing as Jensen Infrastructure documents and the like are proprietary work product and are protected under U.S. copyright and other laws.
Unless in conjunction with business conducted with Jensen Infrastructure , any use of Jensen Infrastructure work product without express, written consent is prohibited, and recipient is prohibited from distributing any and all work product to non-approved third parties under penalty of civil action.
This product shall only be produced in a Jensen Infrastructure facility.

DESCRIPTION:	Vault 4878x60 Rect. Bottom Section Terminators Sump PG&E 04-1567 CASTING DRAWING		REV: D-6-1
PART NUMBER:	200021403	DRAWN BY:	A.Sprung
CREATED:	5/23/2019	MODIFIED:	8/3/2026
			SHEET: 2 OF 2

200021403.idw