NOTES
■ MINIMUM EXCAVATION SIZE: 12'-4" X 10'-4" DEPTH REQ'D.
■ LOAD CONDITION 1: H-20 TRAFFIC WITH DRY SOIL CONDITIONS (WATER LEVEL BELOW TANK) AND 13 INCHES TO 14 FEET OF SOIL COVER.
■ LOAD CONDITION 2: H-20 TRAFFIC WITH WATER LEVEL 2 FEET BELOW GRADE AND 13 INCHES TO 9 FEET OF SOIL COVER.
■ PROPERTIES SHOWN ARE FOR LOAD CONDITION 2.
■ FOR COMPLETE DESIGN AND PRODUCT INFORMATION CONTACT JENSEN PRECAST.

BILL OF MATERIALS

ITEM	QTY	PART NUMBER	DESCRIPTION
1	236.650 ft^3	100011425	CONCRETE MIX 5000 PSI
2	2	100007338	CONNECTOR BOOT 3005-CE TYPE VI CAST-IN-SEAL ASTM C923/C1644 CLOSED HOLE-4-6 4.52-6.64
3	8	100007133	ANCHOR UTILITY .671DIA 7.625-SLAB GALV P75 8UA671
4	1	300122089	REINFORCING MAT 300122089
5	1	300122743	REINFORCING MAT 300122743

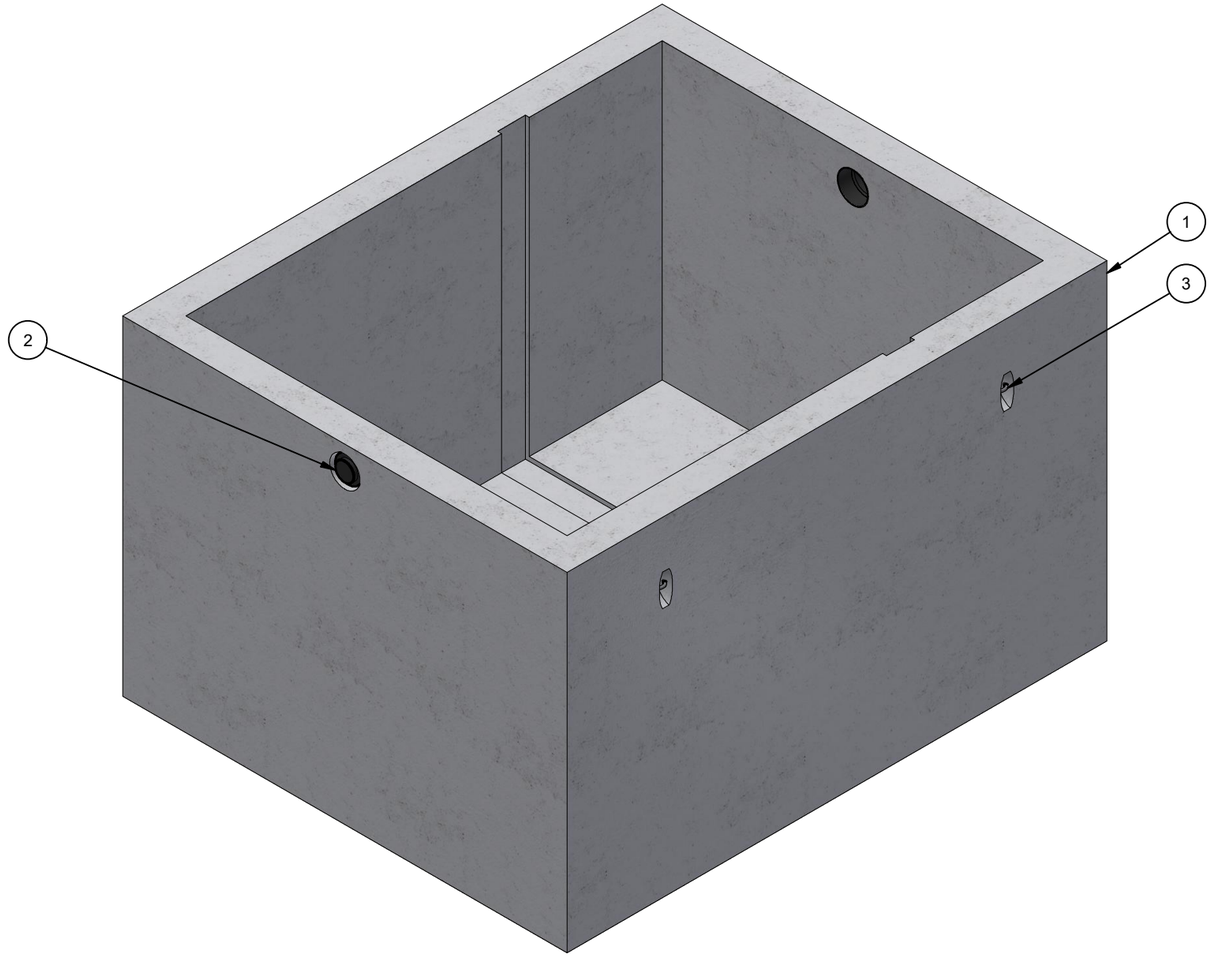

ISO LAYOUT

LIFTING NOTES
■ DEMOLDING: THIS CONCRETE PRODUCT IS DESIGNED TO BE LIFTED AT 3500 PSI WITH 4 LIFT CONNECTIONS EQUALLY LOADED TO 4 LIFTING POINTS AT A MINIMUM 60° SLING ANGLE, MEASURED FROM HORIZONTAL.
■ INSTALLATION: THIS CONCRETE PRODUCT IS DESIGNED TO BE LIFTED AT 3500 PSI WITH 4 LIFT CONNECTIONS EQUALLY LOADED TO 4 LIFTING POINTS AT A MINIMUM 60° SLING ANGLE, MEASURED FROM HORIZONTAL.

REVISION HISTORY			
REV	DESCRIPTION	DATE	BY
A	DRAWING CREATED	7/30/2019	T.Larson
B	REBAR & LIFTING UPDATED	12/14/2020	CMK

BURY DEPTH:	2.0' - 9.9' to Top		
WATER LEVEL:	2.0'	WEIGHT:	35578.28 Lbs
DESIGN SPEC:	ACI 318,ASTM C890	LOADING SPEC:	A-16 (AASHTO HS20-44)
REINFORCEMENT TYPE:	Rebar	LIFTING TYPE:	A-Anchor

JENSEN PRECAST EST. 1968

WWW.JENSENPRECAST.COM

©2018 Jensen Precast- All rights reserved.
All materials appearing as Jensen Precast documents and the like are proprietary work product and are protected under U.S. copyright and other laws.
Unless in conjunction with business conducted with Jensen Precast, any use of Jensen Precast work product without express, written consent is prohibited, and recipient is prohibited from distributing any and all work product to non-approved third parties under penalty of civil action.

DESCRIPTION:	Tank MU 3000 Gallon Rect. Bottom Section HGW CASTING LAYOUT		REV: C-1
PART NUMBER:	200019434	DRAWN BY:	T.Larson
CREATED:	1/23/2019	MODIFIED:	1/13/2021
			SHEET: 1 OF 2

200019434.idw

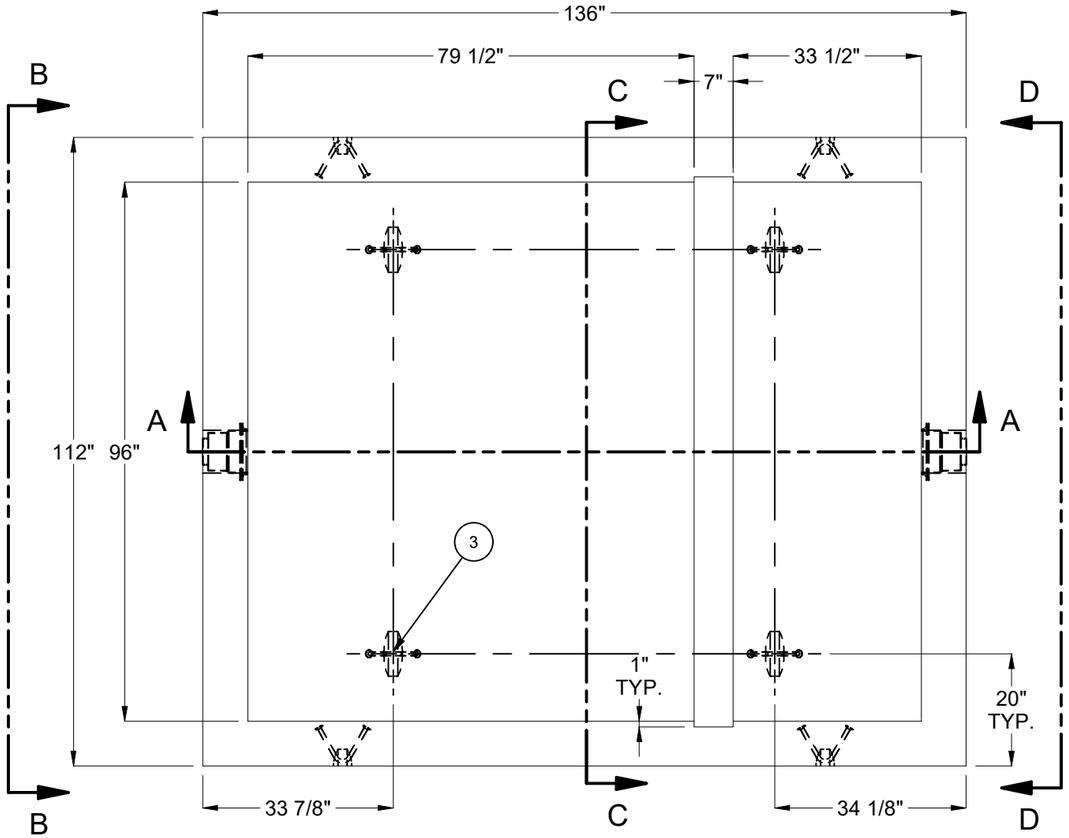

PLAN VIEW

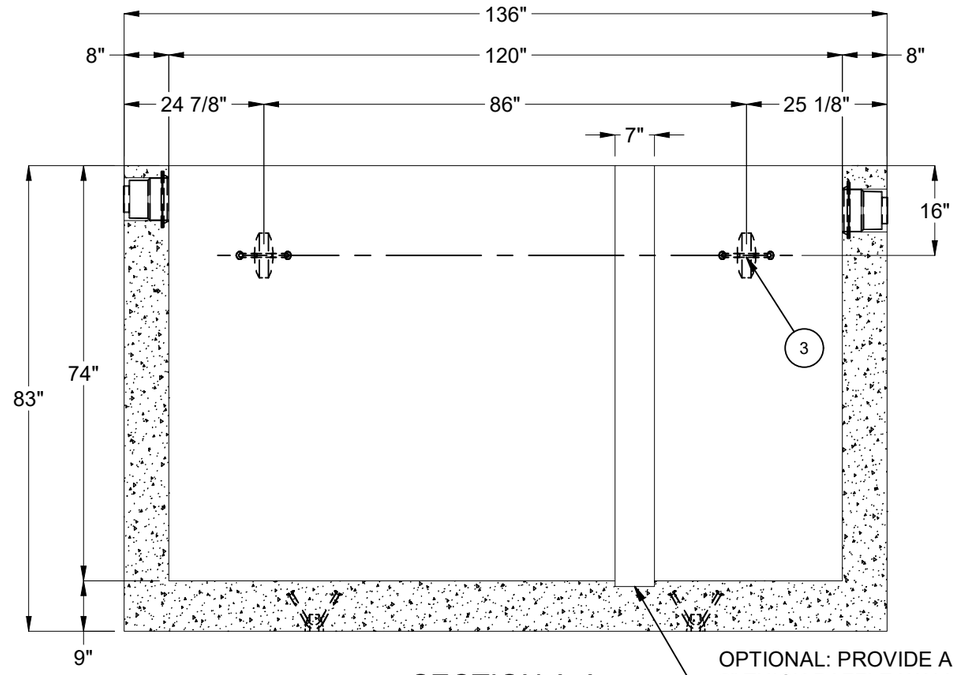

SECTION A-A

OPTIONAL: PROVIDE A 1"x7" NOTCH FOR 6" THICK BAFFLE WALL INSTALLATION (WATERPROOF BAFFLE JOINT AFTER BAFFLE WALL INSTALLATION)

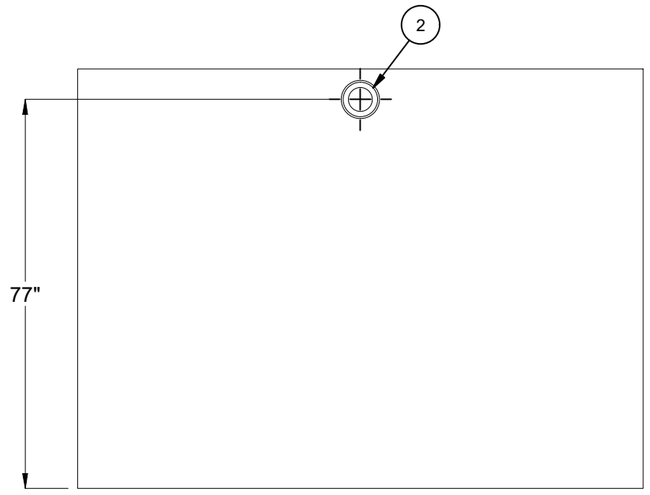

VIEW B-B

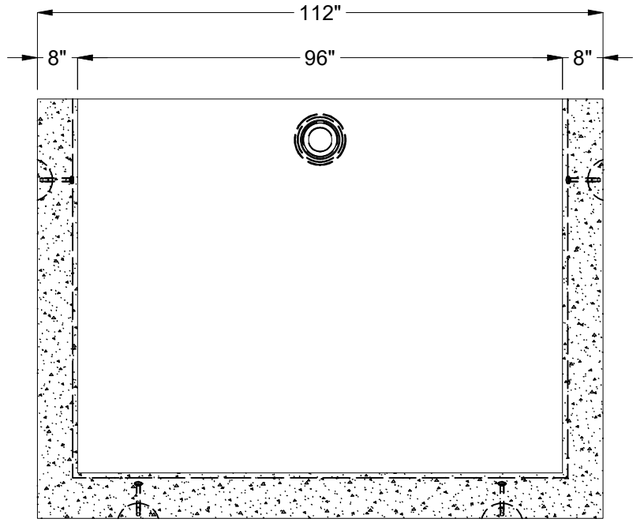

SECTION C-C

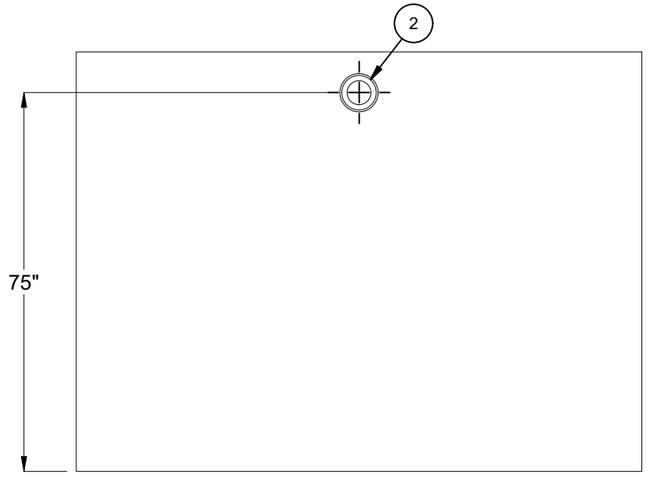

VIEW D-D

BURY DEPTH:	2.0' - 9.9' to Top		
WATER LEVEL:	2.0'	WEIGHT:	35578.28 Lbs
DESIGN SPEC:	ACI 318,ASTM C890	LOADING SPEC:	A-16 (AASHTO HS20-44)
REINFORCEMENT TYPE:	Rebar	LIFTING TYPE:	A-Anchor

JENSEN PRECAST EST. 1968

WWW.JENSENPRECAST.COM

©2018 Jensen Precast- All rights reserved.
All materials appearing as Jensen Precast documents and the like are proprietary work product and are protected under U.S. copyright and other laws.
Unless in conjunction with business conducted with Jensen Precast, any use of Jensen Precast work product without express, written consent is prohibited, and recipient is prohibited from distributing any and all work product to non-approved third parties under penalty of civil action.

DESCRIPTION:	Tank MU 3000 Gallon Rect. Bottom Section HGW CASTING DRAWING		REV: C-1
PART NUMBER:	200019434	DRAWN BY:	T.Larson
CREATED:	1/23/2019	MODIFIED:	1/13/2021
			SHEET: 2 OF 2

200019434.idw