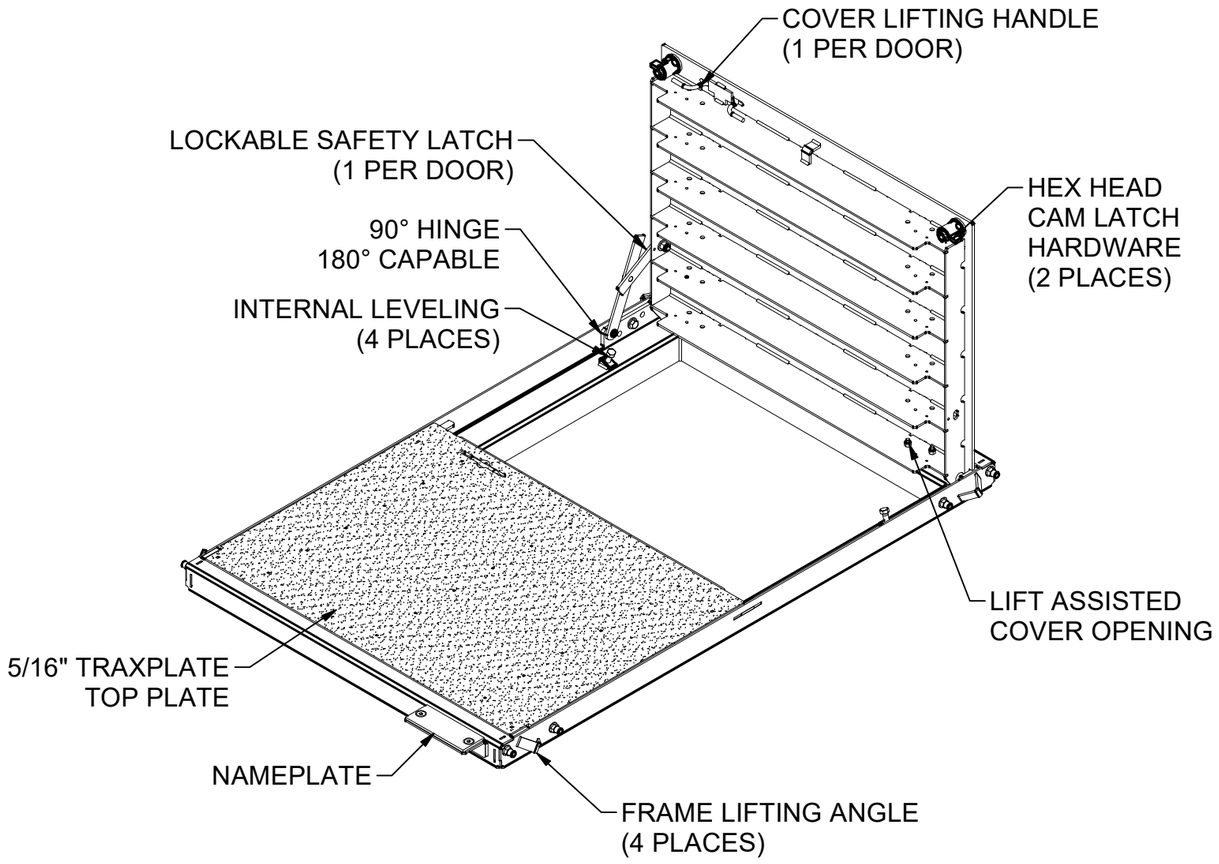

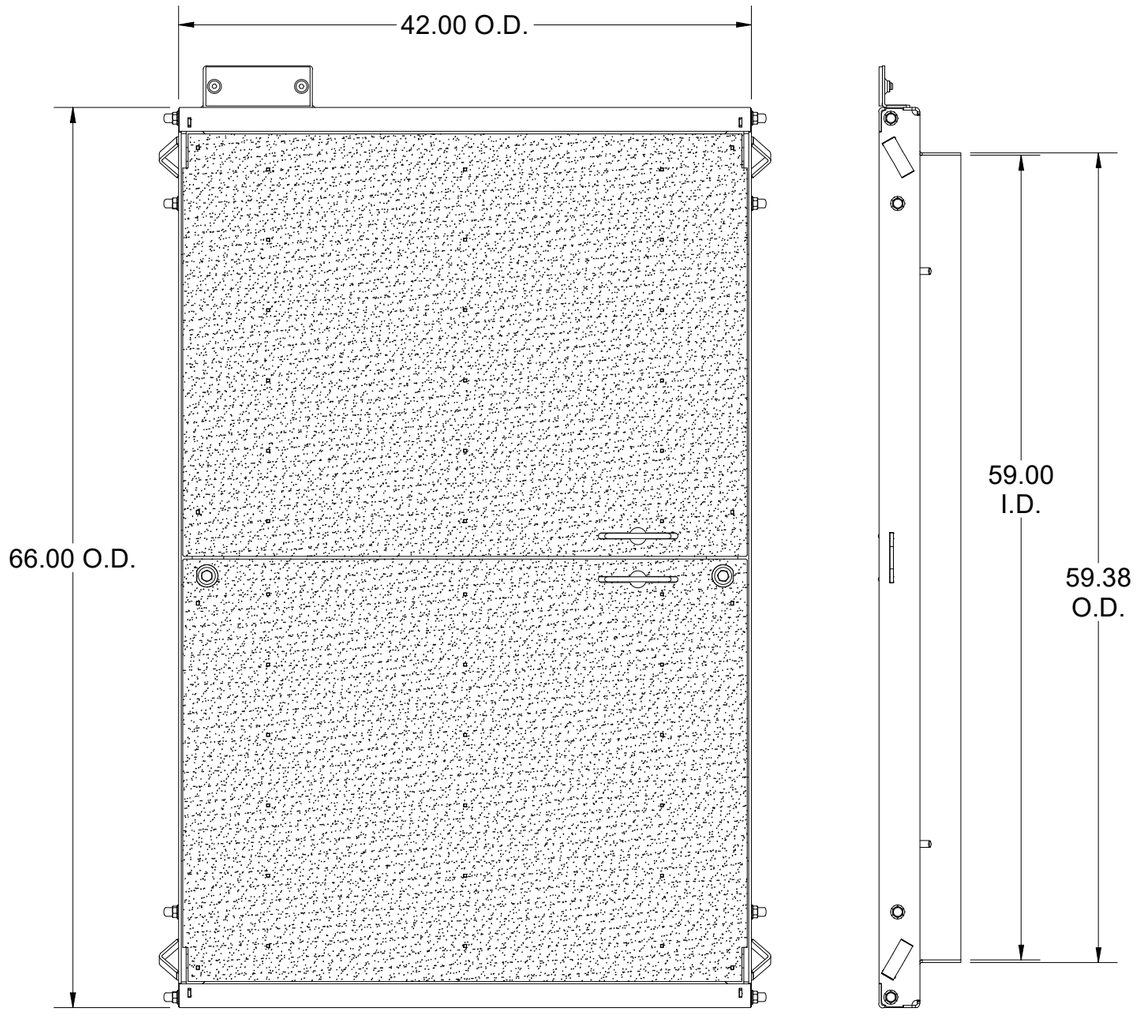

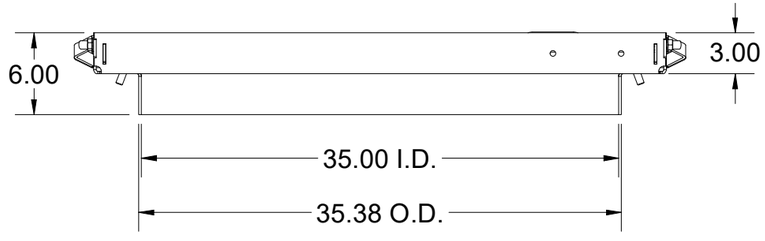

200019040.idw

LOADING CRITERIA: ASTM C1802 Load Level 05

16,000 lb load on 10" x 20" footprint, with 30% impact restricted to unrestricted parking lanes and alleyways where traffic speed is limited to 15 miles per hour.

SURFACE:	TraxPlate™	FINISH:	Galvanized
WEIGHT:	480.55 lbs	MARKING:	None

Infrastructure
JENSEN
527 Dunn Circle, Sparks, NV 89431
775-352-2716 FAX: 755-358-8127
JENSENMETALTECH.COM

©2025 Jensen Infrastructure - All rights reserved.
All materials appearing as Jensen Infrastructure documents and the like are proprietary work product and are protected under U.S. copyright and other laws. Unless in conjunction with business conducted with Jensen Infrastructure , any use of Jensen Infrastructure work product without express, written consent is prohibited, and recipient is prohibited from distributing any and all work product to non-approved third parties under penalty of civil action.
This product shall only be produced in a Jensen Infrastructure facility.

DESCRIPTION: CAS2-3660-AH5-TRX-G-CL-OH06

36x60 Standard Cover Assembly (ASTM C1802 Load Level 05, Steel, Hinged, Handle (1 Per Door), TraxPlate™, Galvanized, N/A) 06

PART NUMBER:	200019040	DRAWN BY:	C. Heywood
CREATED:	4/5/2019	MODIFIED:	12/15/2025

REV: D-2-1

SHEET: 1

BILL OF MATERIALS

ITEM	ITEM QTY	QTY	PART NUMBER	DESCRIPTION	PART NAME
1	1	1	200050245	FAS-3660-AH5-R-OH06	200050245
2	1	1	200050243	DAS2-T-3660-H5-TRX-R	200050243
3	1	1	200050238	DAS2-B-3660-H5-TRX-R-CL	200050238
4	4	4	100007869	BOLT SOCKET CAP - 1/2-13 UNC - 1.75 - 316SS	100007869
5	4	4	100003823	Hex Bolt 1/2-13 UNC ZINC - PT - 1.5"	100003823
6	2	2	100007729	HEX NUT SLOTTED CASTLE HEAD 1/2-13 SS	100007729
7	2	2	100007857	NUT FINGER 1/2-13 BRASS	100007857
8	2	2	100007915	SPRING COMPRESSION 055 X 5/8 X 7/8 LONG	100007915
9	2	2	100007918	COTTER PIN 0.094DIA X 1-1/4	100007918
10	8	8	100007939	CAP VINYL .467 X 1/2	100007939
11	4	4	100007873	BOLT SOCKET CAP - 3/8-16 UNC - 1.25 - ZINC	100007873
12	2	2	100007933	SAFETY LATCH ASSY FOR UNI AND 90 D HINGE	100007933
13	2	2	100007876	Bolt Shoulder Socket Head - 3/8-16 UNC - SD-0.5" - SL-0.3125" - Grade 5 - Zinc	100007876
14	2	2	100007492	HEX NUT NYLOCK - 1/2-13 UNC - GR5 - ZINC	100007492
15	2	2	100007924	LANYARD 3/64 W/PIN COATED SS	100007924
16	2	2	100007882	RIVET GRIP STEEL 3/16 X 7/16 LRG HD	100007882
17	2	2	100007733	BOLT HEX SOCKET FLAT COUNTERSUNK HEAD 1/2-13 UNC 1 GR 5 ZINC-PLATED	100007733
18	2	2	100007666	Hinge Assembly, Right, Steel	100007666
19	2	2	100007659	Hinge Assembly, Left, 1/2, Steel	100007659
20	2	2	100007671	SPRING MOUNT ASSY .500	100007671
21	8	8	100011418	WASHER FLAT 1/2 NARROW ZINC	100011418
22	1	1	100007391	NAME PLATE STEEL - BLANK	100007391
23	4	4	100005059	BOLT HEX 1/2-13 UNC 2.5 ZINC	100005059
24	2	2	100007727	TORSION HEX ROD .5 x 36in RAW	100007727
25	4	4	100007496	HEX NUT NYLOCK - 3/8-16 UNC - ZINC	100007496
26	2	2	100011407	Hex Bolt 1/2-13 UNC ZINC - PT - 2.25"	100011407
27	8	8	100026256	LOW-STRENGTH STEEL FLANGE NUT, 1/2" - 13 THREAD SIZE	100026256

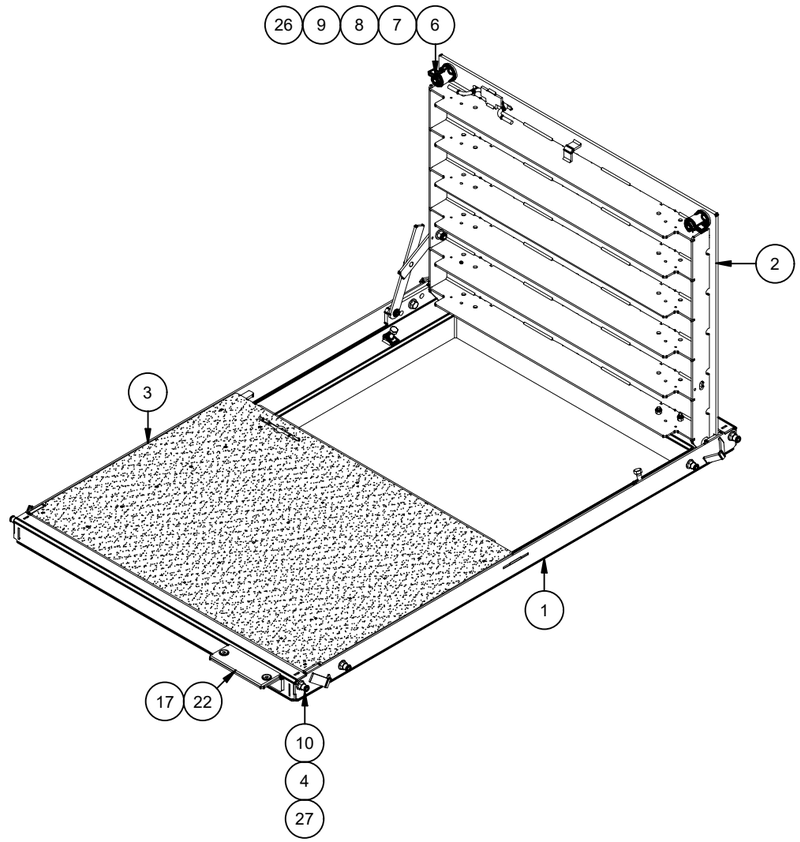

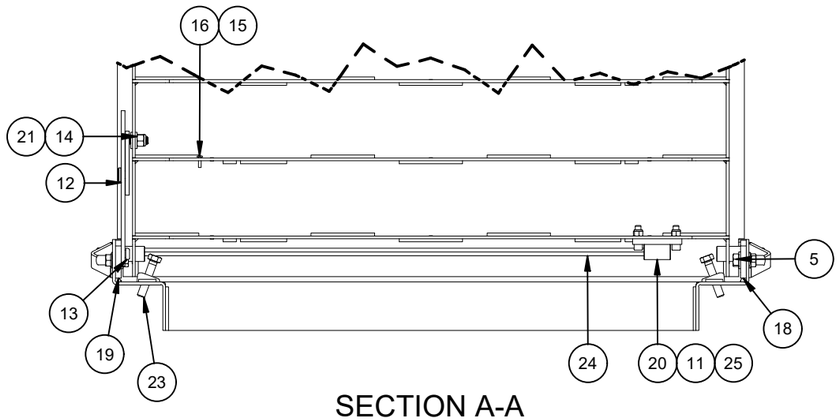

SECTION A-A
SCALE 1/10

200019040.idw

REVISION HISTORY		
DESCRIPTION	DATE	REVISED BY
57209-56: CONVERTED TO FLAT BAT. UPDATED FRAME, WELDS, CALCS, CATCH PLATES, LAP BAR, BOLT DOUBLERS AND UPDATED THE PENTA BOLD CAM HARDWARE TO A HEX BOLT. REPLACED ALL BUT TWO PEM NUTS WITH FLANGE NUTS.	10/3/2025	COLLIN HEYWOOD

MATERIAL FINISH: Galvanized

MATERIAL SURFACE: TraxPlate™

Infrastructure JENSEN

527 Dunn Circle, Sparks, NV 89431
775-352-2716 FAX: 755-358-8127
JENSENMETALTECH.COM

©2025 Jensen Infrastructure - All rights reserved.
All materials appearing as Jensen Infrastructure documents and the like are proprietary work product and are protected under U.S. copyright and other laws. Unless in conjunction with business conducted with Jensen Infrastructure , any use of Jensen Infrastructure work product without express, written consent is prohibited, and recipient is prohibited from distributing any and all work product to non-approved third parties under penalty of civil action.
This product shall only be produced in a Jensen Infrastructure facility.

PART NUMBER & DESCRIPTION: 200019040 CAS2-3660-AH5-TRX-G-CL-OH06

REV: D-2-1

WEIGHT: 480.55 Lbs

DRAWN BY: C. Heywood

CREATED: 4/5/2019

MODIFIED: 12/15/2025

SHEET: 2

BILL OF MATERIALS

ITEM	UNIT QTY	QTY	PART NUMBER	DESCRIPTION	PART NAME
1	112.625 lbmass	112.625 lbmass	100007835	Door Component Steel Plate, Top	200050244
2	8.225 lbmass	49.352 lbmass	100007821	Door Component Steel Stiffener, Plate	200050239
3	3.549 lbmass	7.097 lbmass	100007821	Door Component Steel Side Bar	200050242
4	1	1	100007644	LEAF PULL HANDLE A36 3/8IN DIAMETER	100007644
5	1	1	100007647	LIFTING BRACKET STEEL LEAF	100007647
6	1	1	100007646	HANDLE RETAINER STL	100007646
7	1	2	100007970	CAM TOWER CAST STEEL	100007970

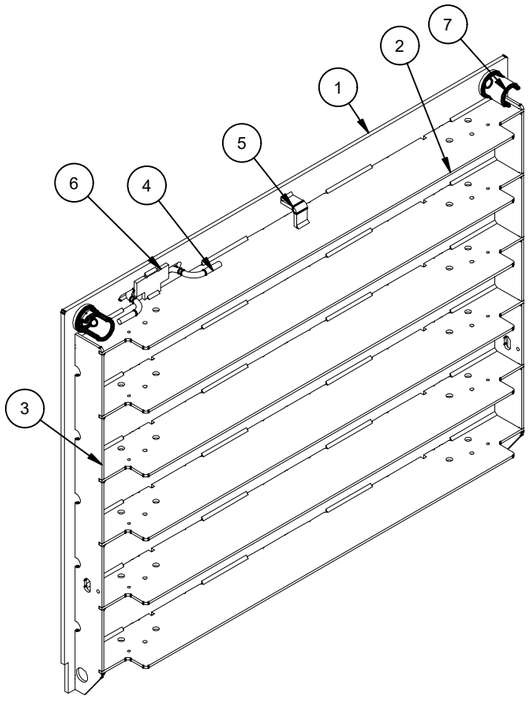

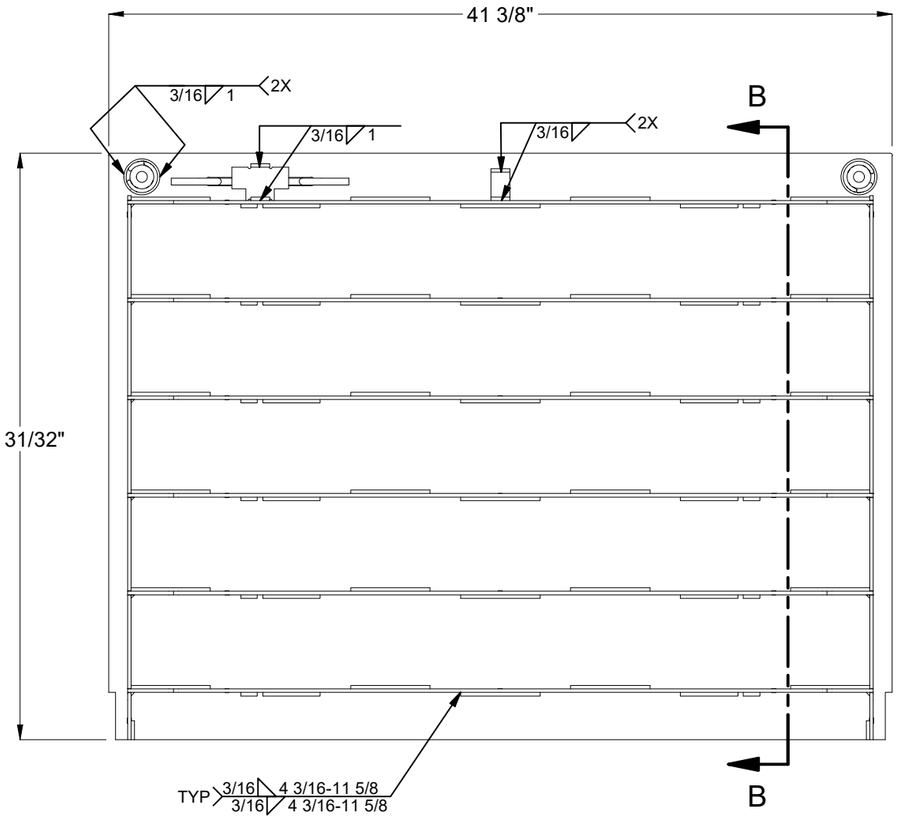

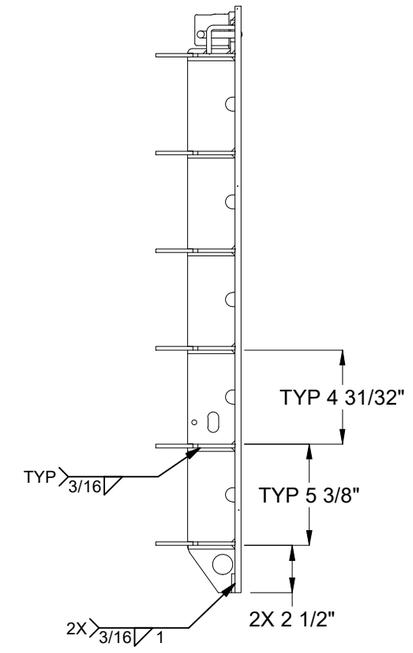

SECTION B-B

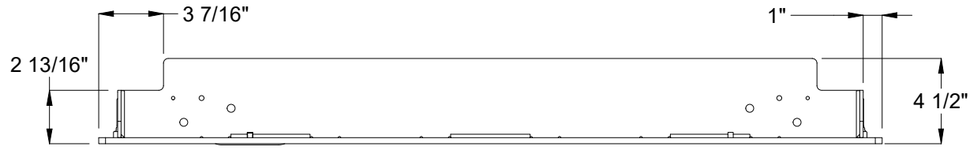

MATERIAL FINISH: Raw	Infrastructure JENSEN 527 Dunn Circle, Sparks, NV 89431 775-352-2716 FAX: 755-358-8127 *JENSENMETALTECH.COM*	©2025 Jensen Infrastructure - All rights reserved. All materials appearing as Jensen Infrastructure documents and the like are proprietary work product and are protected under U.S. copyright and other laws. Unless in conjunction with business conducted with Jensen Infrastructure , any use of Jensen Infrastructure work product without express, written consent is prohibited, and recipient is prohibited from distributing any and all work product to non-approved third parties under penalty of civil action. This product shall only be produced in a Jensen Infrastructure facility.	PART NUMBER & DESCRIPTION: 200050243 DAS2-T-3660-H5-TRX-R REV: D-2-1
MATERIAL SURFACE: TraxPlate™			WEIGHT: 171.98 Lbs DRAWN BY: C. Heywood CREATED: 4/5/2019 MODIFIED: 12/15/2025 SHEET: 3

200019040.idw

BILL OF MATERIALS

ITEM	UNIT QTY	QTY	PART NUMBER	DESCRIPTION	PART NAME
1	112.999 lbmass	112.999 lbmass	100007835	Door Component Steel Plate, Bottom	200050241
2	8.225 lbmass	49.352 lbmass	100007821	Door Component Steel Stiffener, Plate	200050239
3	3.549 lbmass	7.097 lbmass	100007821	Door Component Steel Side Bar	200050242
4	4.842 lbmass	4.842 lbmass	100007735	Door Component Steel Lap Bar 36in, 2.5" Stiffener Offset	200087246
5	1	1	100007644	LEAF PULL HANDLE A36 3/8IN DIAMETER	100007644
6	1	1	100007647	LIFTING BRACKET STEEL LEAF	100007647

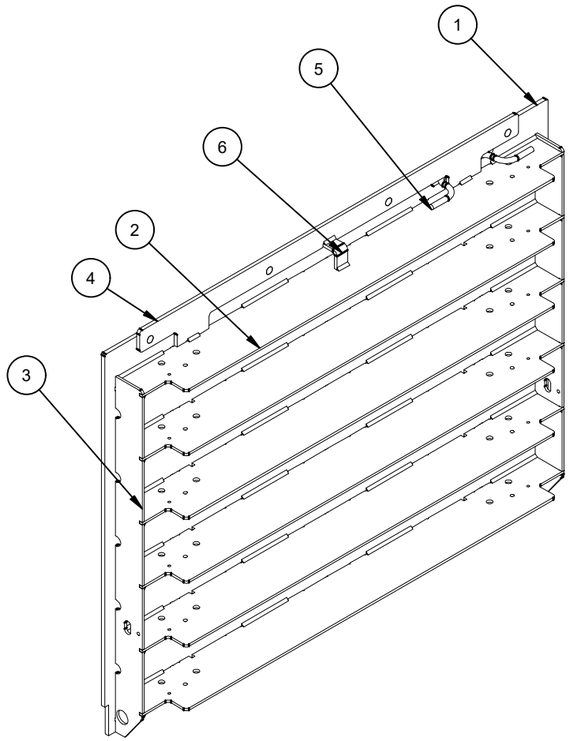

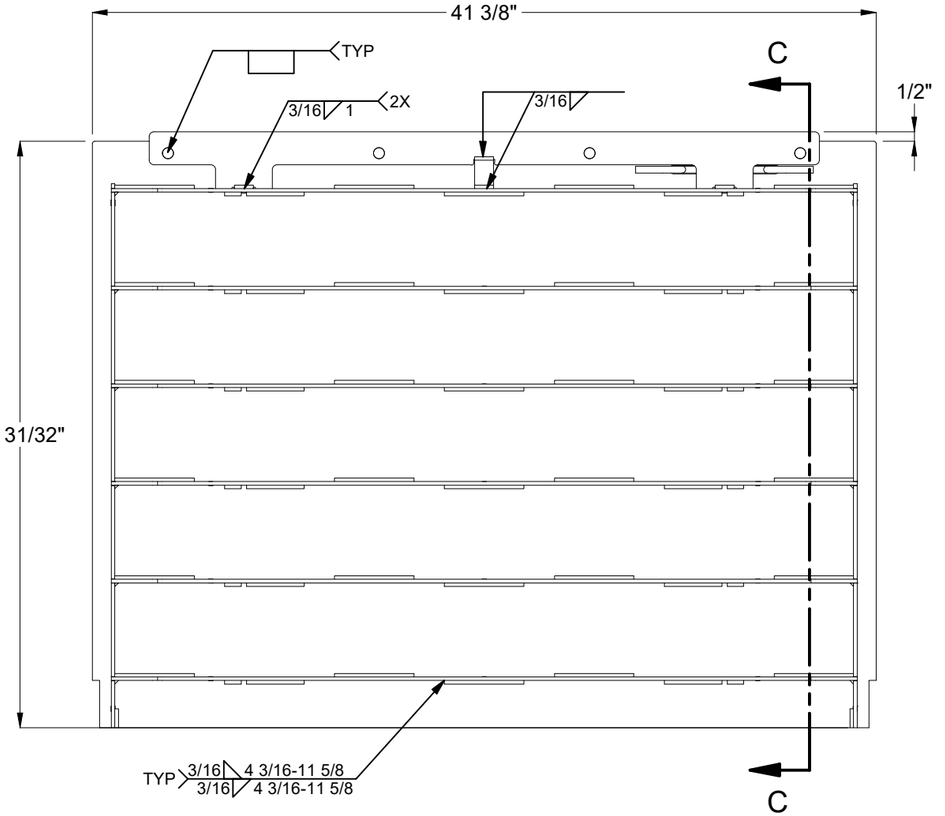

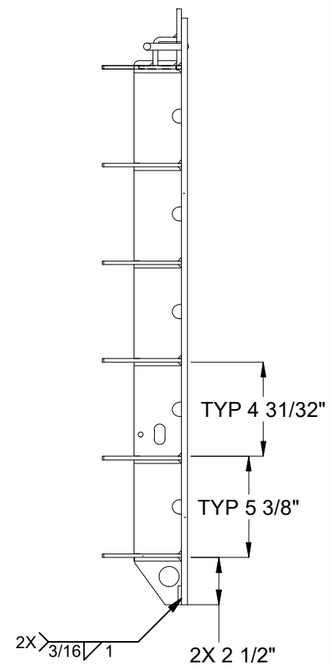

SECTION C-C

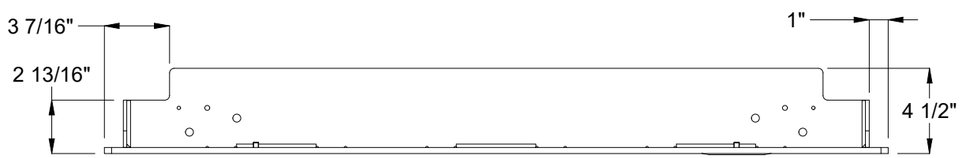

MATERIAL FINISH: Raw	Infrastructure JENSEN 527 Dunn Circle, Sparks, NV 89431 775-352-2716 FAX: 755-358-8127 *JENSENMETALTECH.COM*	©2025 Jensen Infrastructure - All rights reserved. All materials appearing as Jensen Infrastructure documents and the like are proprietary work product and are protected under U.S. copyright and other laws. Unless in conjunction with business conducted with Jensen Infrastructure , any use of Jensen Infrastructure work product without express, written consent is prohibited, and recipient is prohibited from distributing any and all work product to non-approved third parties under penalty of civil action. This product shall only be produced in a Jensen Infrastructure facility.	PART NUMBER & DESCRIPTION: 200050238 DAS2-B-3660-H5-TRX-R-CL WEIGHT: 175.73 Lbs DRAWN BY: C. Heywood CREATED: 4/5/2019 MODIFIED: 12/15/2025	REV: D-2-1 SHEET: 4
MATERIAL SURFACE: TraxPlate™				

200019040.idw

BILL OF MATERIALS

ITEM	UNIT QTY	QTY	PART NUMBER	DESCRIPTION	PART NAME
1	29.978 lbmass	59.957 lbmass	100007734	Frame Component Steel Frame Side, Adjustable	200050247
2	21.795 lbmass	43.591 lbmass	100007734	Frame Component Steel Frame End, Adjustable	200050246
3	1	4	200018691	FRAME BOLT DOUBLER SLOT	200018691
4	1	2	200100755	Frame Cam Latch Catch Plate - 1/4" A36, Dual Door, 0.8125" Overhang	200100755
5	1	2	100007728	NUT SELF-CLINCH 1/2-13 S-0813-1 RAW	100007728
6	1	4	100007641	FRAME LIFTING BRACKET	100007641
7	1	4	100007863	NUT LEVELER 1/2-13 WELDABLE CAST STEEL	100007863
8	1	1	100007667	NAME PLATE FRAME ANGLE	100007667

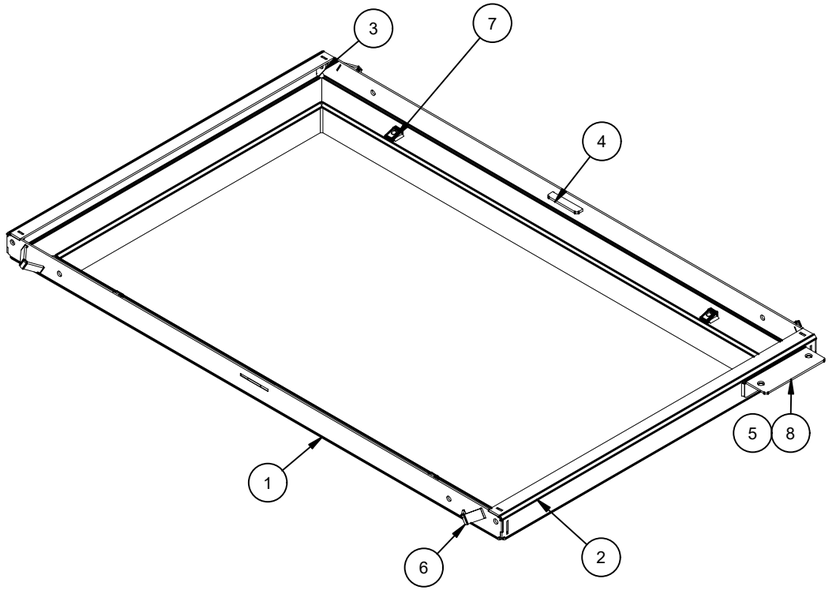

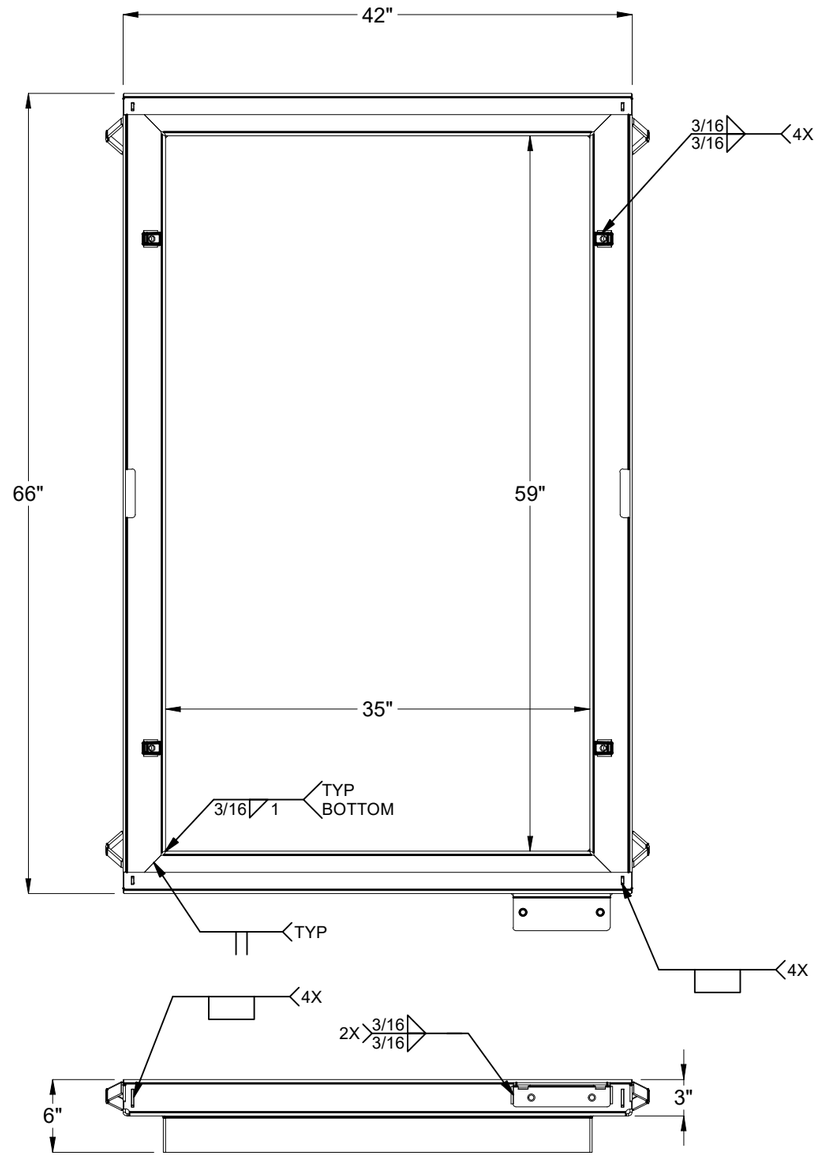

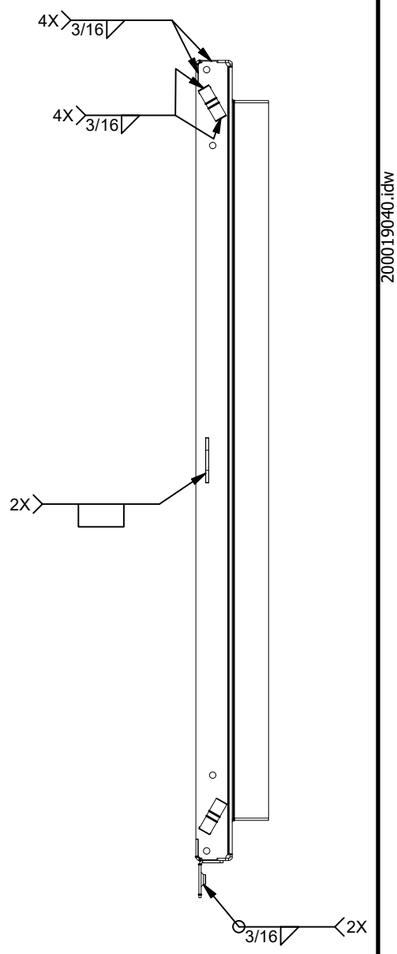

200019040.idw

MATERIAL FINISH: Raw	Infrastructure JENSEN 527 Dunn Circle, Sparks, NV 89431 775-352-2716 FAX: 755-358-8127 *JENSENMETALTECH.COM*	©2025 Jensen Infrastructure - All rights reserved. All materials appearing as Jensen Infrastructure documents and the like are proprietary work product and are protected under U.S. copyright and other laws. Unless in conjunction with business conducted with Jensen Infrastructure , any use of Jensen Infrastructure work product without express, written consent is prohibited, and recipient is prohibited from distributing any and all work product to non-approved third parties under penalty of civil action. This product shall only be produced in a Jensen Infrastructure facility.	PART NUMBER & DESCRIPTION: 200050245 FAS-3660-AH5-R-OH06
MATERIAL SURFACE: Smooth			WEIGHT: 140 Lbs / DRAWN BY: C. Heywood / CREATED: 4/5/2019 / MODIFIED: 12/15/2025

REV: D-2-1

SHEET: 5

BURN LIST - BOM

PART NAME	ITEM QTY	QTY	DESCRIPTION	STOCK NUMBER	MATERIAL	MASS	SHEET
200050239	12	98.705 lbmass	Door Component Steel Stiffener, Plate	100007821	SHT STL GR80 SM-HRPO RAW .1875	8.240 lbmass	07
200050241	1	112.999 lbmass	Door Component Steel Plate, Bottom	100007835	STL ASTM A36 SM-HRPO RAW .3125	113.006 lbmass	08
200050242	4	14.195 lbmass	Door Component Steel Side Bar	100007821	SHT STL GR80 SM-HRPO RAW .1875	3.549 lbmass	09
200050244	1	112.625 lbmass	Door Component Steel Plate, Top	100007835	STL ASTM A36 SM-HRPO RAW .3125	112.631 lbmass	10
200050246	2	43.591 lbmass	Frame Component Steel Frame End, Adjustable	100007734	STL ASTM A36 SM-HRPO 60X120 RAW .1875	21.789 lbmass	11
200050247	2	59.957 lbmass	Frame Component Steel Frame Side, Adjustable	100007734	STL ASTM A36 SM-HRPO 60X120 RAW .1875	29.972 lbmass	12
200087246	1	4.842 lbmass	Door Component Steel Lap Bar 36in, 2.5" Stiffener Offset	100007735	STL ASTM A36 SM-HRPO RAW .250	4.842 lbmass	13

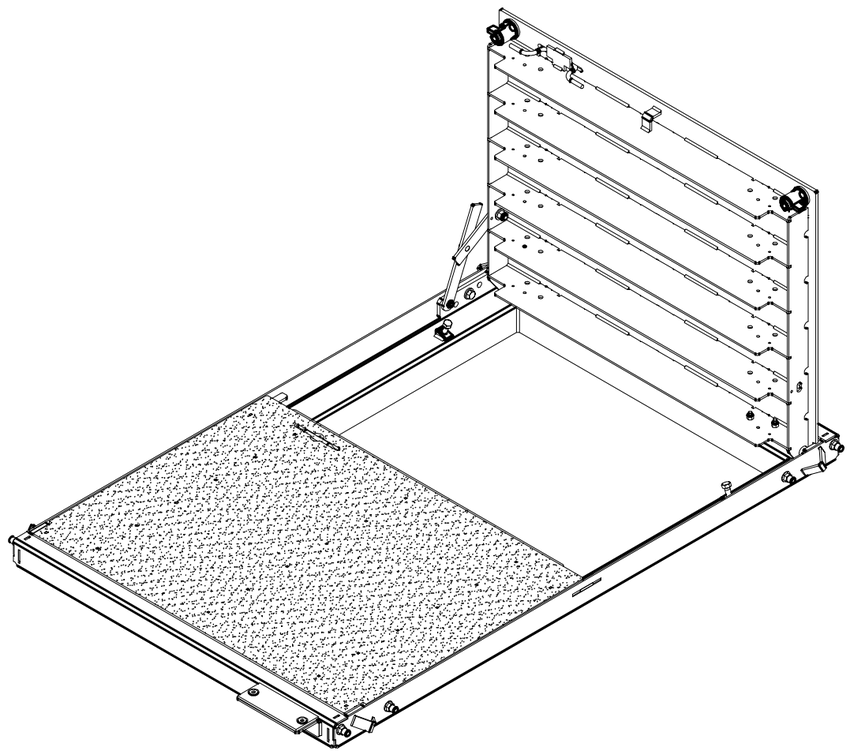

200019040.idw

MATERIAL FINISH: Galvanized

MATERIAL SURFACE: TraxPlate™

Infrastructure JENSEN

527 Dunn Circle, Sparks, NV 89431
775-352-2716 FAX: 755-358-8127
JENSENMETALTECH.COM

©2025 Jensen Infrastructure - All rights reserved.
All materials appearing as Jensen Infrastructure documents and the like are proprietary work product and are protected under U.S. copyright and other laws.
Unless in conjunction with business conducted with Jensen Infrastructure , any use of Jensen Infrastructure work product without express, written consent is prohibited, and recipient is prohibited from distributing any and all work product to non-approved third parties under penalty of civil action.
This product shall only be produced in a Jensen Infrastructure facility.

PART NUMBER & DESCRIPTION: 200019040 CAS2-3660-AH5-TRX-G-CL-OH06

REV: D-2-1

WEIGHT: 480.55 Lbs

DRAWN BY: C. Heywood

CREATED: 4/5/2019

MODIFIED: 12/15/2025

SHEET: 6

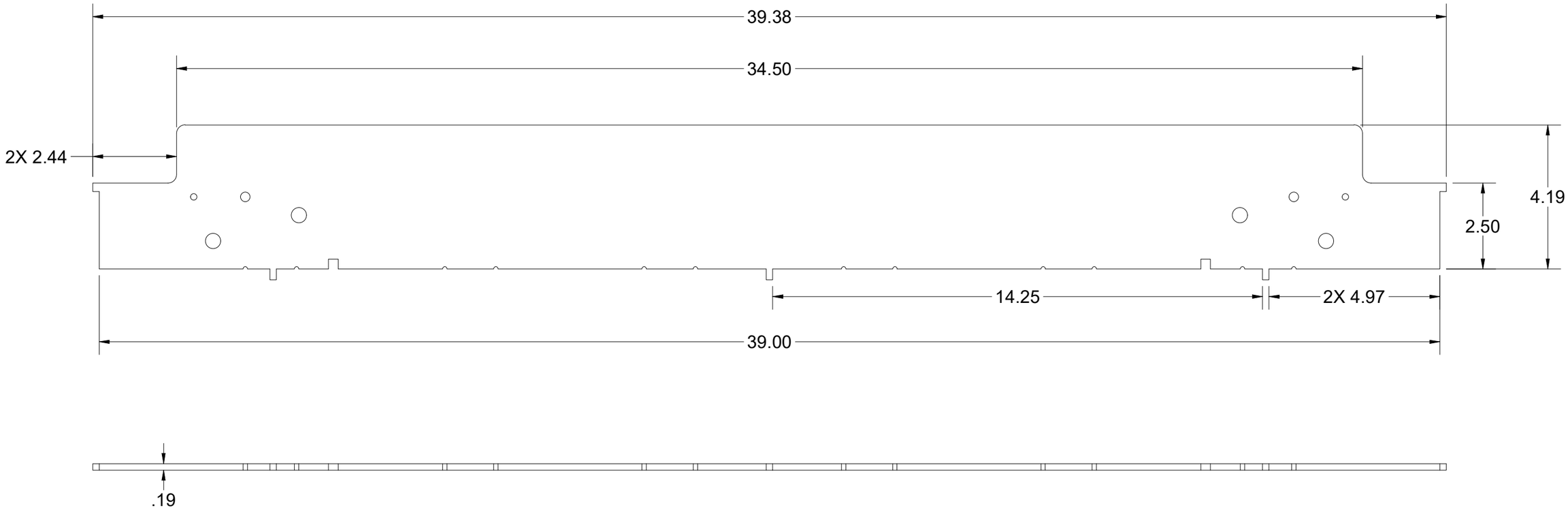

BEND TABLE				MATERIAL IFS: 100007821
BEND RADIUS	V-OPENING	BEND ANGLE	BEND DEDUCTION	MATERIAL THK: 0.1875
-	-	- 0	-	MAT DESCRIPTION: SHT STL GR80 SM-HRPO RAW .1875

Infrastructure JENSEN
527 Dunn Circle, Sparks, NV 89431
775-352-2716 FAX: 755-358-8127
JENSENMETALTECH.COM

©2025 Jensen Infrastructure - All rights reserved.
All materials appearing as Jensen Infrastructure documents and the like are proprietary work product and are protected under U.S. copyright and other laws. Unless in conjunction with business conducted with Jensen Infrastructure , any use of Jensen Infrastructure work product without express, written consent is prohibited, and recipient is prohibited from distributing any and all work product to non-approved third parties under penalty of civil action.
This product shall only be produced in a Jensen Infrastructure facility.

NAME & DESCRIPTION: 200050239 Door Component Steel Stiffener, Plate		REV: D-2-1
WEIGHT: 8.240 lbmass	DRAWN BY: C. Heywood	SHEET: 7 OF 13
CREATED: 4/5/2019	MODIFIED: 12/15/2025	

200019040.idw

ASYMMETRIC

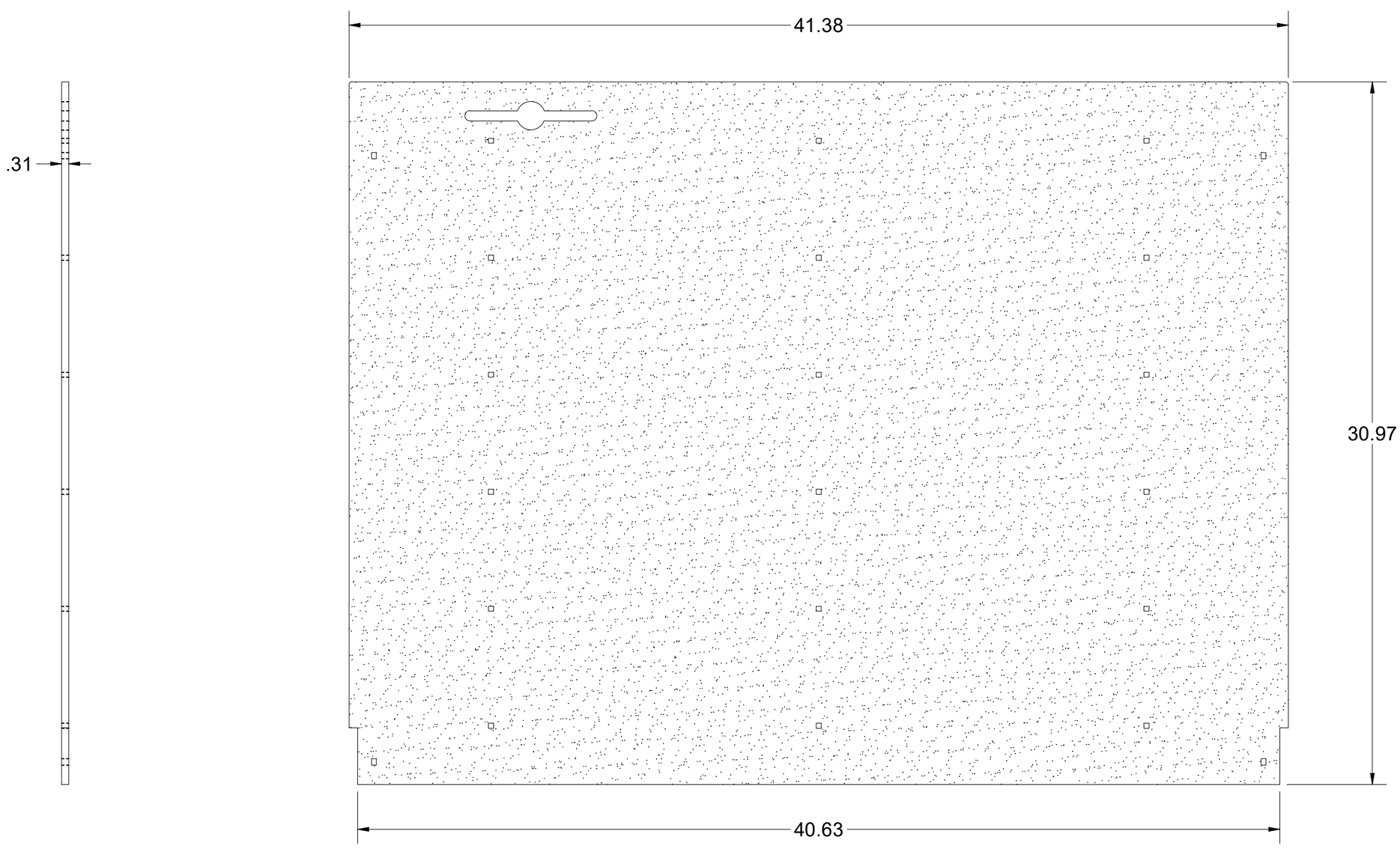

200019040.idw

BEND TABLE			
BEND RADIUS	V-OPENING	BEND ANGLE	BEND DEDUCTION
-	-	- 0	-

MATERIAL IFS: 100007835

MATERIAL THK: 0.3125

MAT DESCRIPTION: STL ASTM A36 SM-HRPO RAW .3125

Infrastructure JENSEN

527 Dunn Circle, Sparks, NV 89431
775-352-2716 FAX: 755-358-8127
JENSENMETALTECH.COM

©2025 Jensen Infrastructure - All rights reserved. All materials appearing as Jensen Infrastructure documents and the like are proprietary work product and are protected under U.S. copyright and other laws. Unless in conjunction with business conducted with Jensen Infrastructure , any use of Jensen Infrastructure work product without express, written consent is prohibited, and recipient is prohibited from distributing any and all work product to non-approved third parties under penalty of civil action. This product shall only be produced in a Jensen Infrastructure facility.

NAME & DESCRIPTION: 200050241 — Door Component Steel Plate, Bottom

REV: D-2-1

WEIGHT: 113.006 lbmass

DRAWN BY: C. Heywood

CREATED: 4/5/2019

MODIFIED: 12/15/2025

SHEET: 8 OF 13

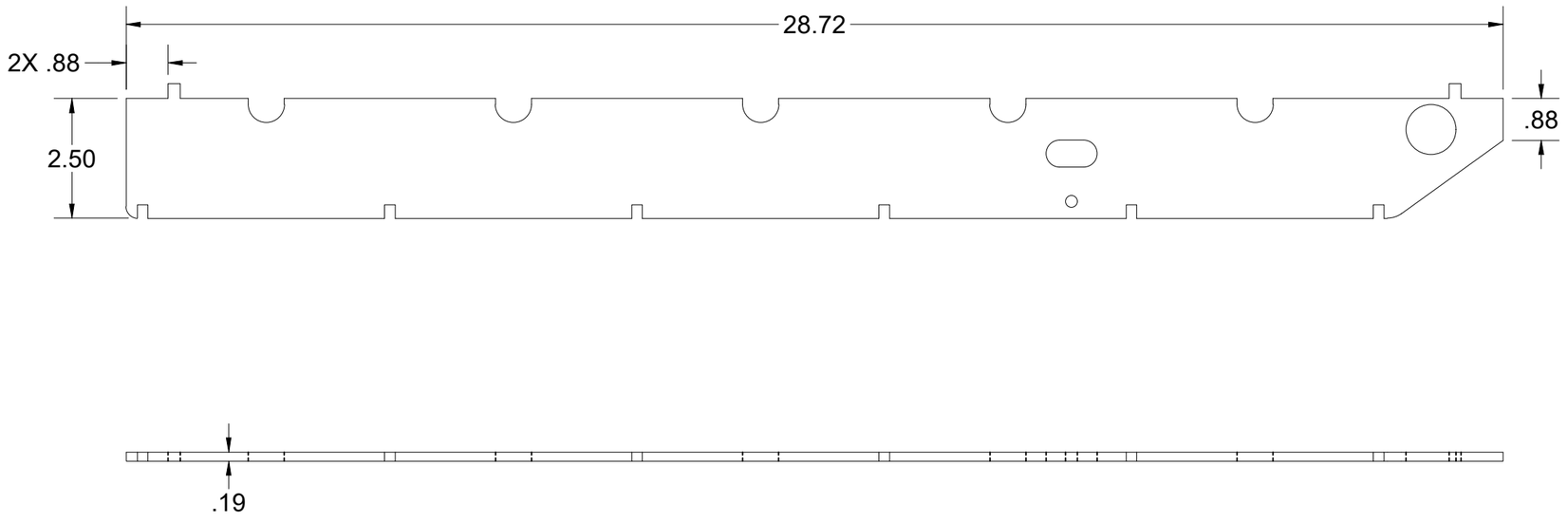

BEND TABLE				MATERIAL IFS: 100007821
BEND RADIUS	V-OPENING	BEND ANGLE	BEND DEDUCTION	MATERIAL THK: 0.1875
-	-	- 0	-	MAT DESCRIPTION: SHT STL GR80 SM-HRPO RAW .1875

Infrastructure JENSEN
527 Dunn Circle, Sparks, NV 89431
775-352-2716 FAX: 755-358-8127
JENSENMETALTECH.COM

©2025 Jensen Infrastructure - All rights reserved.
All materials appearing as Jensen Infrastructure documents and the like are proprietary work product and are protected under U.S. copyright and other laws. Unless in conjunction with business conducted with Jensen Infrastructure , any use of Jensen Infrastructure work product without express, written consent is prohibited, and recipient is prohibited from distributing any and all work product to non-approved third parties under penalty of civil action.
This product shall only be produced in a Jensen Infrastructure facility.

NAME & DESCRIPTION: 200050242 Door Component Steel Side Bar		REV: D-2-1
WEIGHT: 3.549 lbmass	DRAWN BY: C. Heywood	SHEET: 9 OF 13
CREATED: 4/5/2019	MODIFIED: 12/15/2025	

200019040.idw

ASYMMETRIC

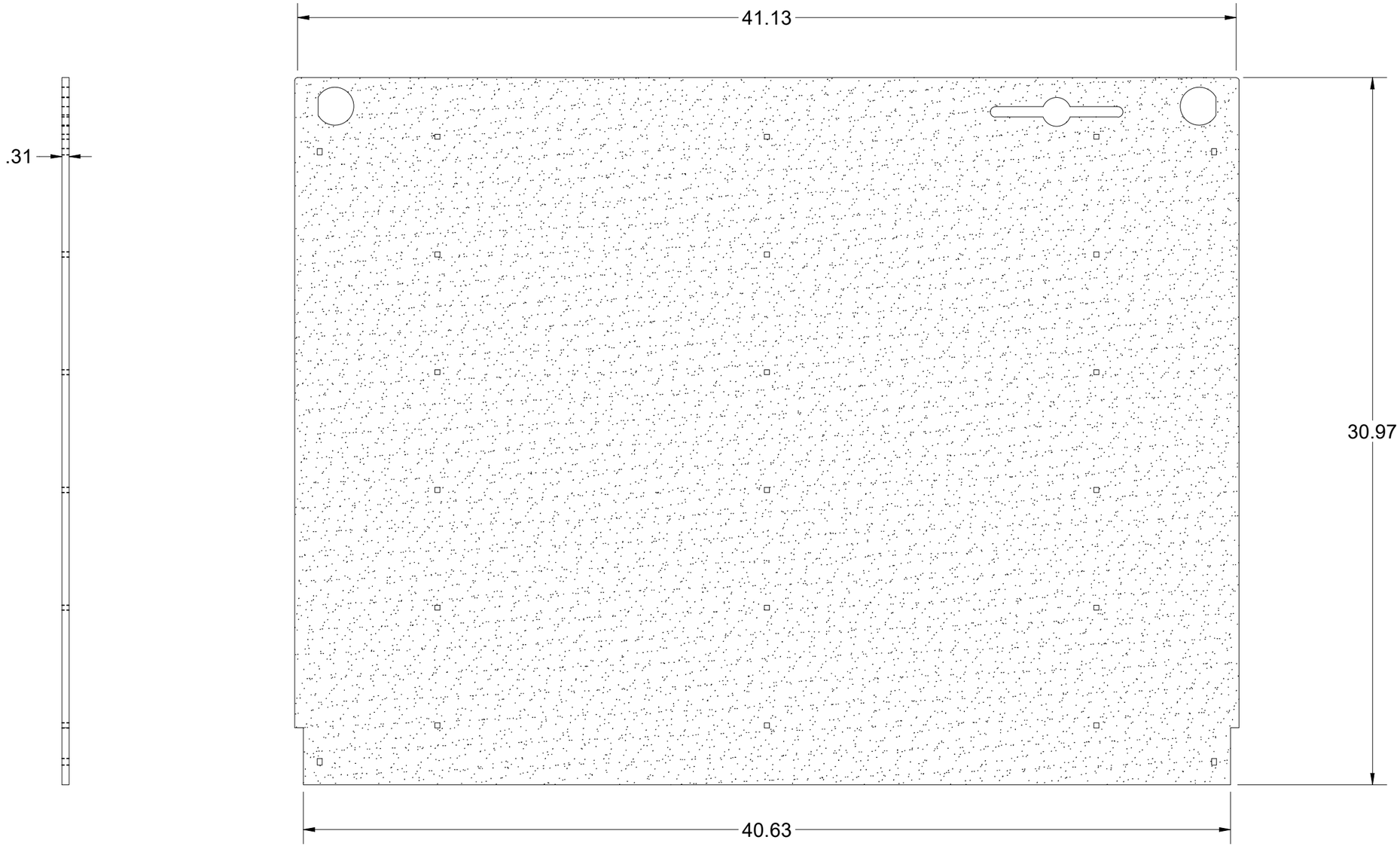

200019040.idw

BEND TABLE			
BEND RADIUS	V-OPENING	BEND ANGLE	BEND DEDUCTION
-	-	- 0	-

MATERIAL IFS: 100007835

MATERIAL THK: 0.3125

MAT DESCRIPTION: STL ASTM A36 SM-HRPO RAW .3125

Infrastructure JENSEN

527 Dunn Circle, Sparks, NV 89431
775-352-2716 FAX: 755-358-8127
JENSENMETALTECH.COM

©2025 Jensen Infrastructure - All rights reserved. All materials appearing as Jensen Infrastructure documents and the like are proprietary work product and are protected under U.S. copyright and other laws. Unless in conjunction with business conducted with Jensen Infrastructure , any use of Jensen Infrastructure work product without express, written consent is prohibited, and recipient is prohibited from distributing any and all work product to non-approved third parties under penalty of civil action. This product shall only be produced in a Jensen Infrastructure facility.

NAME & DESCRIPTION: 200050244 Door Component Steel Plate, Top

REV: D-2-1

WEIGHT: 112.631 lbmass

DRAWN BY: C. Heywood

CREATED: 4/5/2019

MODIFIED: 12/15/2025

SHEET: 10 OF 13

ASYMMETRIC

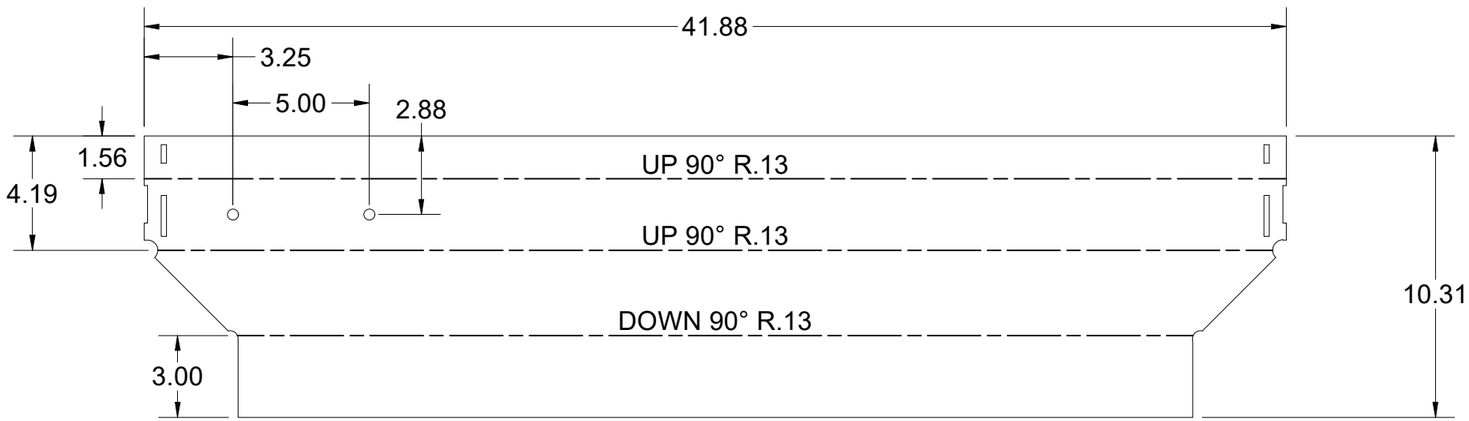

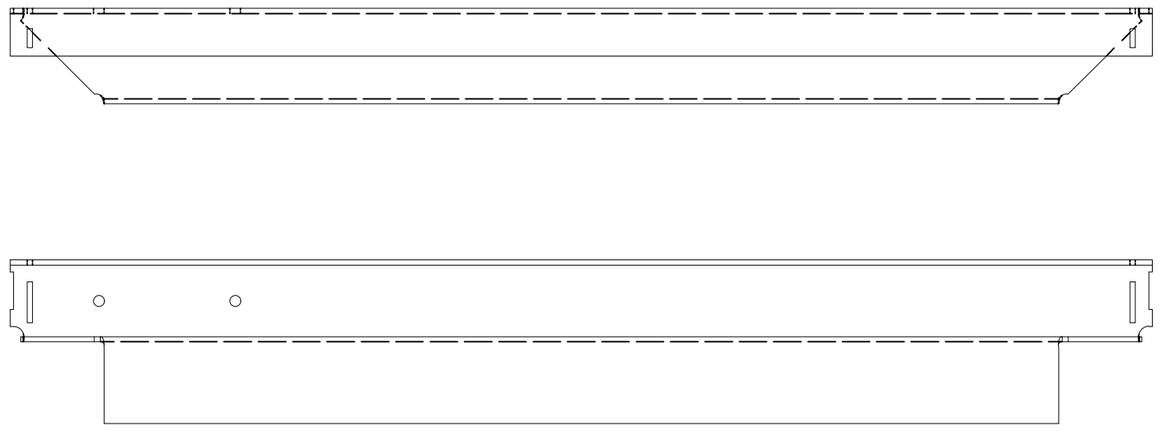

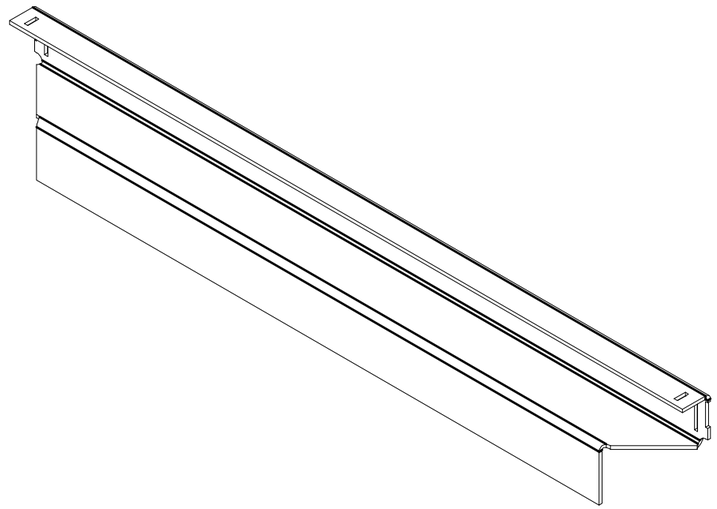

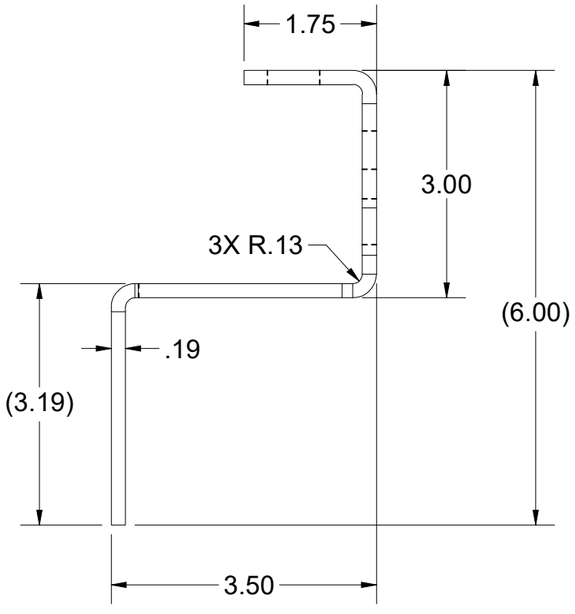

200019040.idw

BEND TABLE			
BEND RADIUS	V-OPENING	BEND ANGLE	BEND DEDUCTION
0.125	2	90	0.375

MATERIAL IFS: 100007734

MATERIAL THK: 0.1875

MAT DESCRIPTION: STL ASTM A36 SM-HRPO 60X120 RAW .1875

Infrastructure JENSEN

527 Dunn Circle, Sparks, NV 89431
775-352-2716 FAX: 755-358-8127
JENSENMETALTECH.COM

©2025 Jensen Infrastructure - All rights reserved. All materials appearing as Jensen Infrastructure documents and the like are proprietary work product and are protected under U.S. copyright and other laws. Unless in conjunction with business conducted with Jensen Infrastructure , any use of Jensen Infrastructure work product without express, written consent is prohibited, and recipient is prohibited from distributing any and all work product to non-approved third parties under penalty of civil action. This product shall only be produced in a Jensen Infrastructure facility.

NAME & DESCRIPTION: 200050246 Frame Component Steel Frame End, Adjustable

REV: D-2-1

WEIGHT: 21.789 lbmass

DRAWN BY: C. Heywood

SHEET: 11 OF 13

CREATED: 4/5/2019

MODIFIED: 12/15/2025

SYMMETRIC

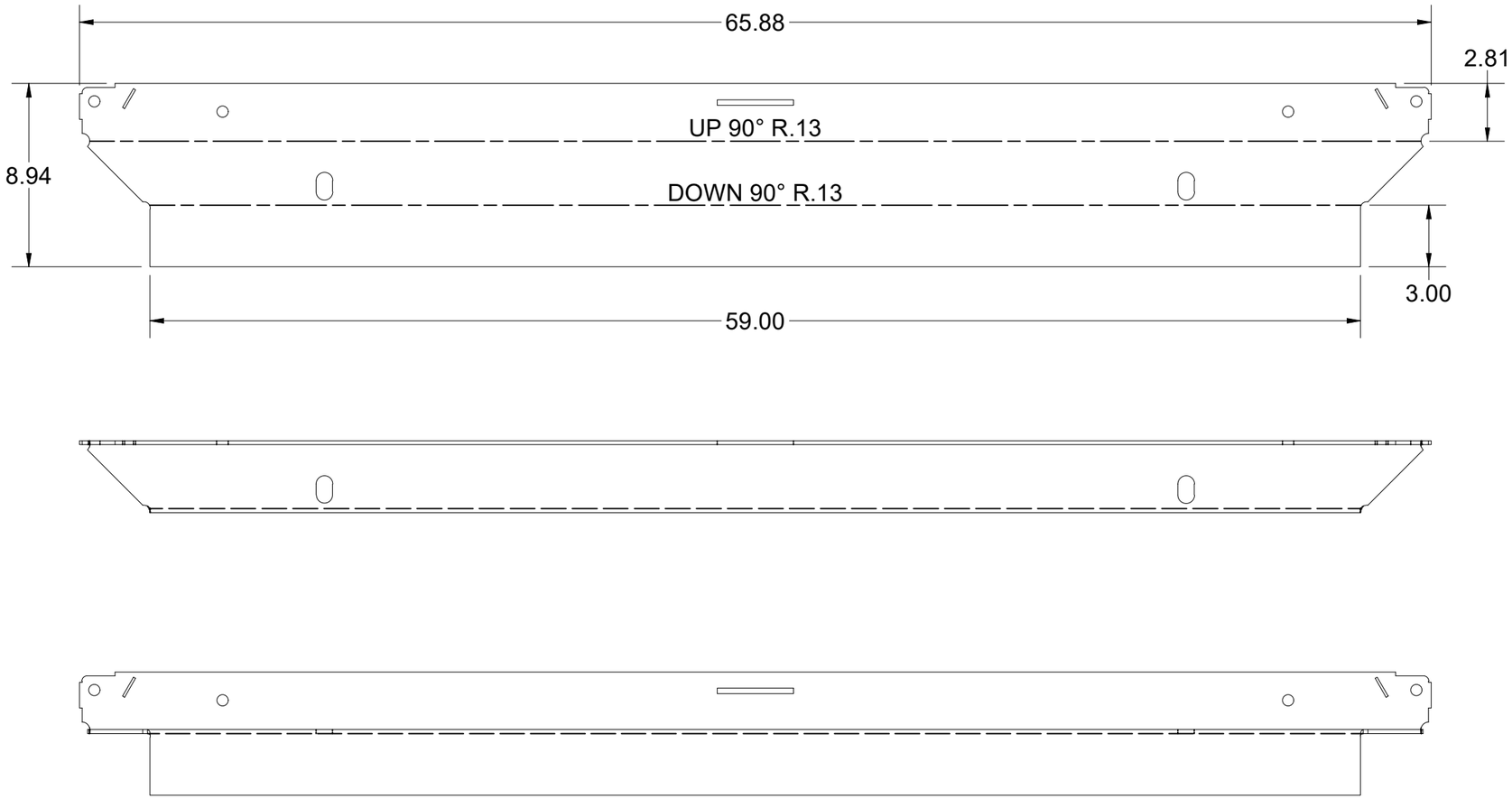

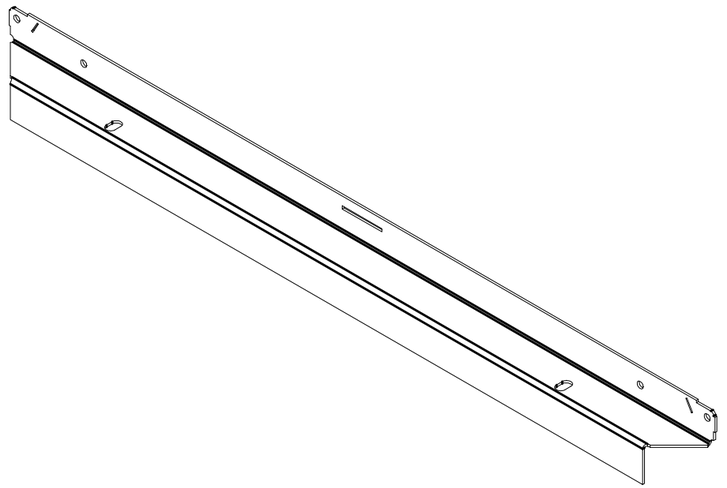

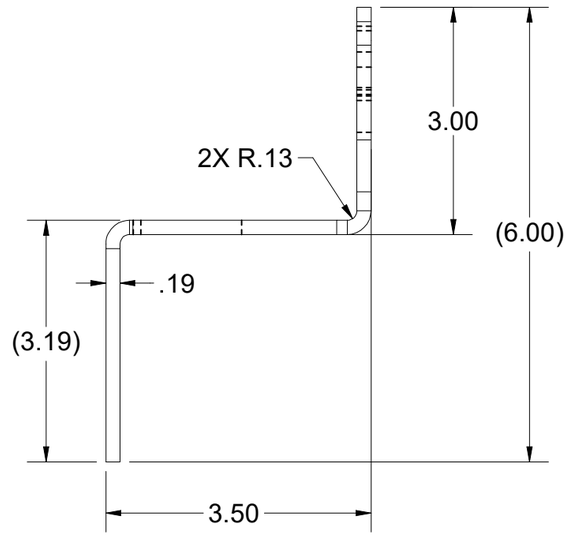

BEND TABLE				MATERIAL IFS: 100007734
BEND RADIUS	V-OPENING	BEND ANGLE	BEND DEDUCTION	MATERIAL THK: 0.1875
0.125	2	90	0.375	MAT DESCRIPTION: STL ASTM A36 SM-HRPO 60X120 RAW .1875

Infrastructure
JENSEN
527 Dunn Circle, Sparks, NV 89431
775-352-2716 FAX: 755-358-8127
JENSENMETALTECH.COM

©2025 Jensen Infrastructure - All rights reserved.
All materials appearing as Jensen Infrastructure documents and the like are proprietary work product and are protected under U.S. copyright and other laws. Unless in conjunction with business conducted with Jensen Infrastructure , any use of Jensen Infrastructure work product without express, written consent is prohibited, and recipient is prohibited from distributing any and all work product to non-approved third parties under penalty of civil action.
This product shall only be produced in a Jensen Infrastructure facility.

NAME & DESCRIPTION: 200050247 Frame Component Steel Frame Side, Adjustable		REV: D-2-1
WEIGHT: 29.972 lbmass	DRAWN BY: C. Heywood	SHEET: 12 OF 13
CREATED: 4/5/2019	MODIFIED: 12/15/2025	

200019040.idw

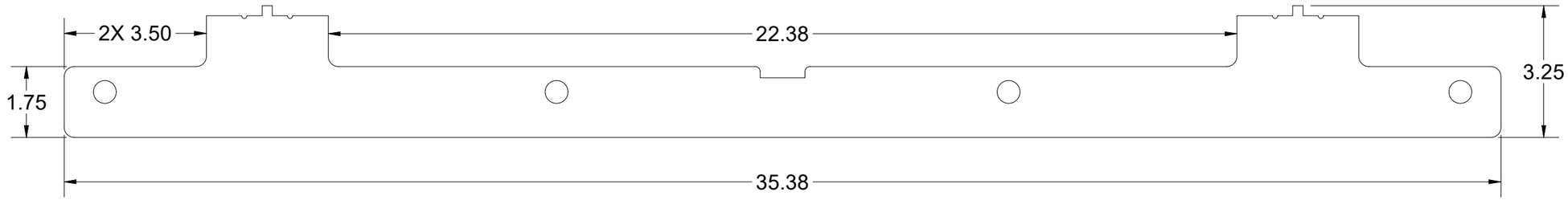

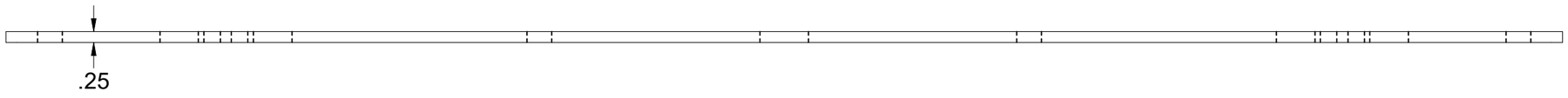

BEND TABLE				MATERIAL IFS: 100007735
BEND RADIUS	V-OPENING	BEND ANGLE	BEND DEDUCTION	MATERIAL THK: 0.25
-	-	- 0	-	MAT DESCRIPTION: STL ASTM A36 SM-HRPO RAW .250

Infrastructure
JENSEN
527 Dunn Circle, Sparks, NV 89431
775-352-2716 FAX: 755-358-8127
JENSENMETALTECH.COM

©2025 Jensen Infrastructure - All rights reserved.
All materials appearing as Jensen Infrastructure documents and the like are proprietary work product and are protected under U.S. copyright and other laws. Unless in conjunction with business conducted with Jensen Infrastructure , any use of Jensen Infrastructure work product without express, written consent is prohibited, and recipient is prohibited from distributing any and all work product to non-approved third parties under penalty of civil action.
This product shall only be produced in a Jensen Infrastructure facility.

NAME & DESCRIPTION:		REV:
200087246 Door Component Steel Lap Bar 36in, 2.5" Stiffener Offset		D-2-1
WEIGHT: 4.842 lbmass	DRAWN BY: C. Heywood	SHEET: 13 OF 13
CREATED: 4/5/2019	MODIFIED: 12/15/2025	

200019040.idw