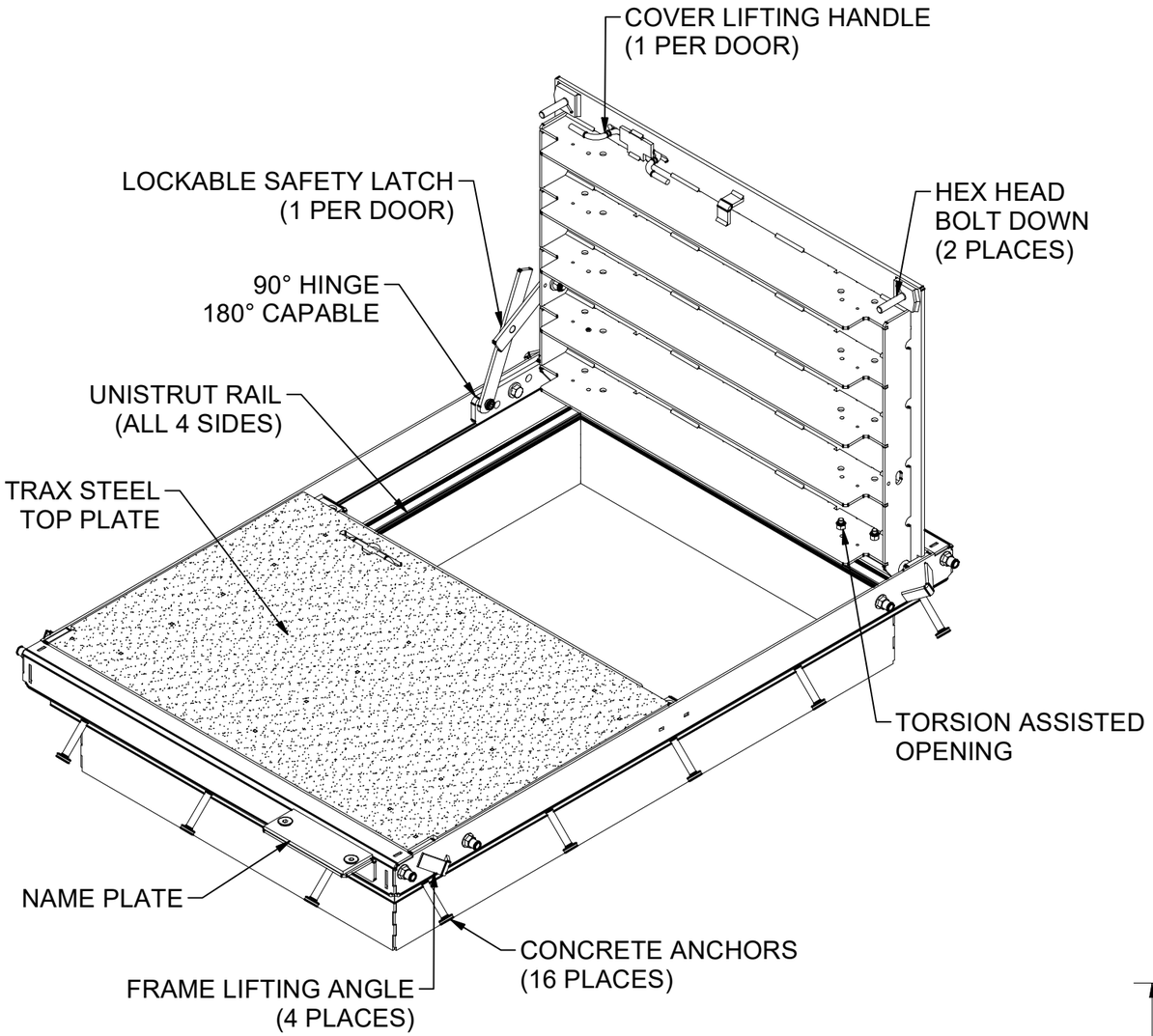

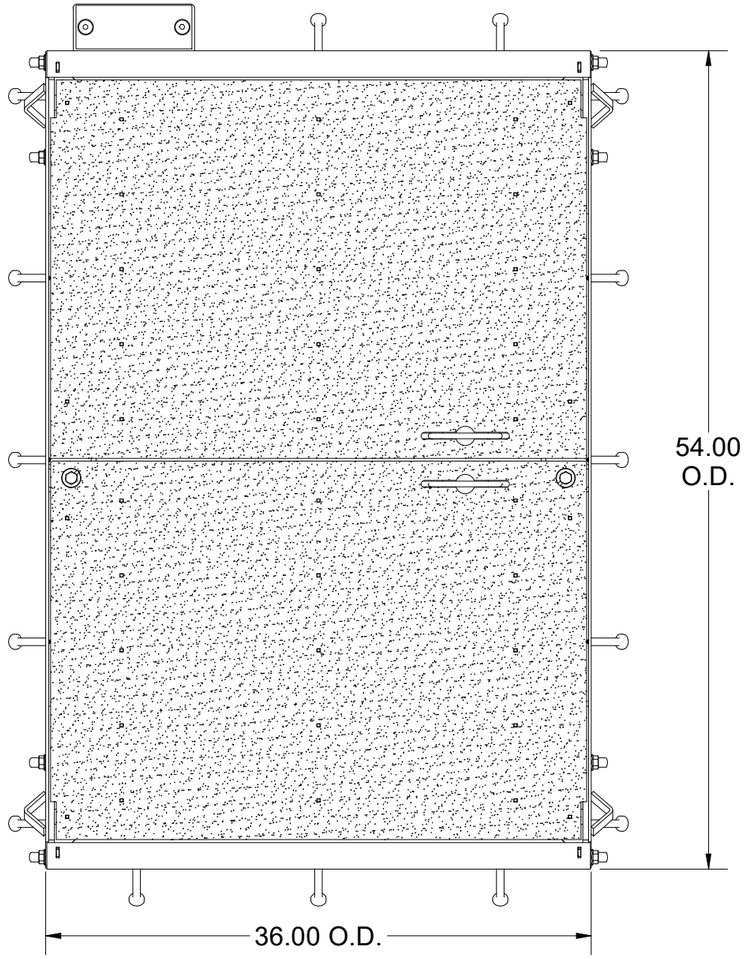

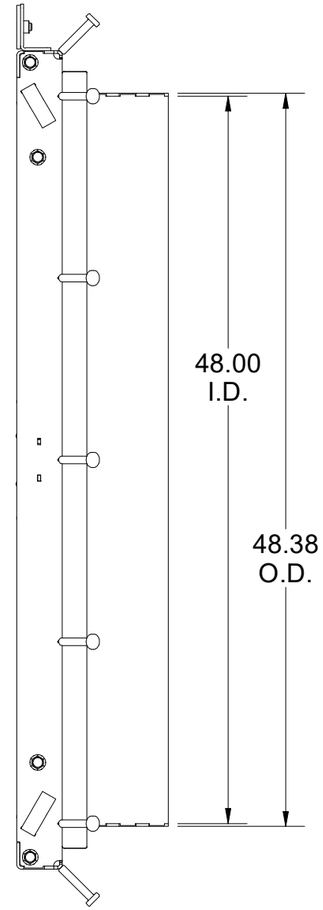

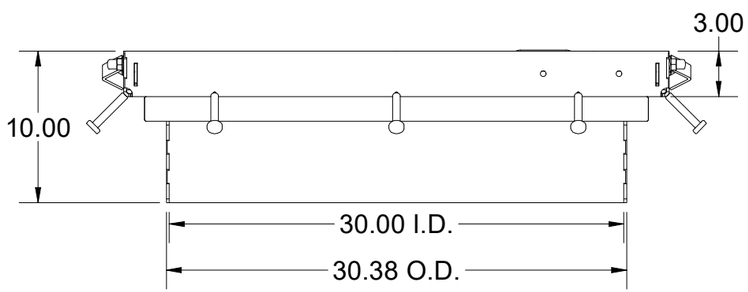

200018770.idw

LOADING CRITERIA: ASTM C1802 Load Level 05

16,000 lb load on 10" x 20" footprint, with 30% impact restricted to unrestricted parking lanes and alleyways where traffic speed is limited to 15 miles per hour.

SURFACE:	TraxPlate™	FINISH:	Galvanized
WEIGHT:	405.18 lbs	MARKING:	None

Infrastructure
JENSEN
527 Dunn Circle, Sparks, NV 89431
775-352-2716 FAX: 755-358-8127
JENSENMETALTECH.COM

©2026 Jensen Infrastructure - All rights reserved. All materials appearing as Jensen Infrastructure documents and the like are proprietary work product and are protected under U.S. copyright and other laws. Unless in conjunction with business conducted with Jensen Infrastructure , any use of Jensen Infrastructure work product without express, written consent is prohibited, and recipient is prohibited from distributing any and all work product to non-approved third parties under penalty of civil action. This product shall only be produced in a Jensen Infrastructure facility.

DESCRIPTION:	CAS2-3048-CH5-TRX-G-BD-WR-OH10		
	30x48 Standard Cover Assembly (ASTM C1802 Load Level 05, Steel, Hinged, Handle (1 Per Door), TraxPlate™, Galvanized, N/A, N/A) 10		
PART NUMBER:	200018770	DRAWN BY:	C. Heywood
CREATED:	3/29/2019	MODIFIED:	11/3/2026

REV:	C-3
SHEET:	1

BILL OF MATERIALS

ITEM	ITEM QTY	QTY	PART NUMBER	DESCRIPTION	PART NAME
1	1	1	200018771	FAS-3048-CH5-R-OH10	200018771
2	1	1	200018788	DAS2-T-3048-H5-TRX-R-BD	200018788
3	1	1	200018793	DAS2-B-3048-H5-TRX-R-BD	200018793
4	4	4	100007869	BOLT SOCKET CAP - 1/2-13 UNC - 1.75 - 316SS	100007869
5	4	4	100003823	Hex Bolt 1/2-13 UNC ZINC - PT - 1.5"	100003823
6	8	8	100007939	CAP VINYL .467 X 1/2	100007939
7	4	4	100007873	BOLT SOCKET CAP - 3/8-16 UNC - 1.25 - ZINC	100007873
8	2	2	100007725	TORSION HEX ROD 3/8 X 30 RAW	100007725
9	2	2	100007933	SAFETY LATCH ASSY FOR UNI AND 90 D HINGE	100007933
10	2	2	100007876	Bolt Shoulder Socket Head - 3/8-16 UNC - SD-0.5" - SL-0.3125" - Grade 5 - Zinc	100007876
11	2	2	100007492	HEX NUT NYLOCK - 1/2-13 UNC - GR5 - ZINC	100007492
12	2	2	100007924	LANYARD 3/64 W/PIN COATED SS	100007924
13	2	2	100007882	RIVET GRIP STEEL 3/16 X 7/16 LRG HD	100007882
14	2	2	100007666	Hinge Assembly, Right, Steel	100007666
15	8	8	100011418	WASHER FLAT 1/2 NARROW ZINC	100011418
16	2	2	100005059	BOLT HEX 1/2-13 UNC 2.5 ZINC	100005059
17	1	1	100007391	NAME PLATE STEEL - BLANK	100007391
18	2	2	100007669	SPRING MOUNT ASSY .375	100007669
19	2	2	100007655	Hinge Assembly, Left, 3/8, Steel	100007655
20	4	4	100007496	HEX NUT NYLOCK - 3/8-16 UNC - ZINC	100007496
21	8	8	100026256	LOW-STRENGTH STEEL FLANGE NUT, 1/2" - 13 THREAD SIZE	100026256
22	2	2	100007441	STRUT FITTING SPRING NUT 1/2-13 UNC 1-5/8 CHANNEL REGULAR SPRING ZINC	100007441
23	2	2	100007733	Bolt Socket Flat Countersunk Head - 1/2-13 UNC - Grade 5 - Zinc - FT - 1"	100007733

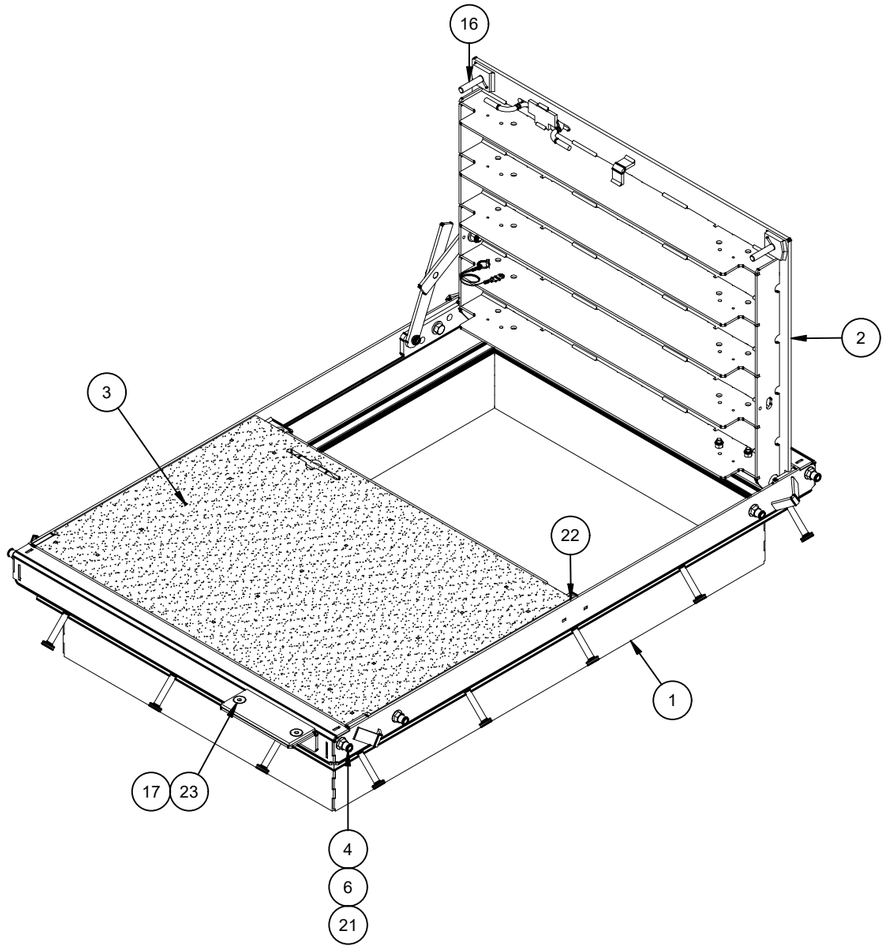

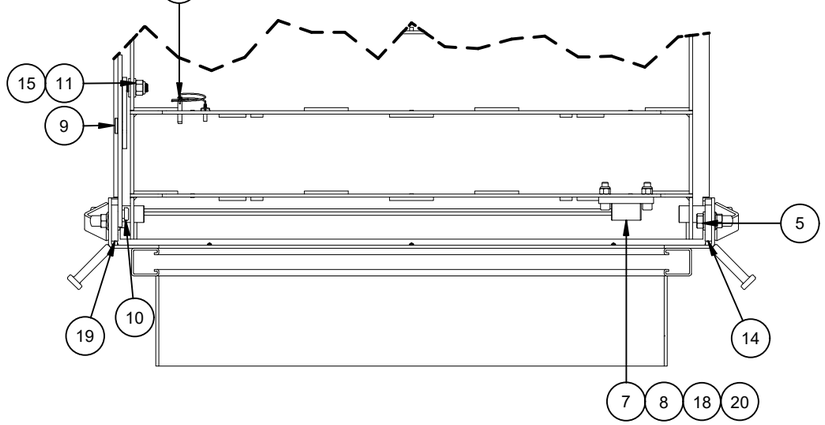

SECTION A-A
SCALE 1/9

200018770.idw

REVISION HISTORY		
DESCRIPTION	DATE	REVISED BY
60146-1: UPDATED WELDS, CALCS, TORSION HARDWARE, BOLT DOWN HARDWARE AND LAP BAR.	1/13/2026	COLLIN HEYWOOD
REDUCED TOP PLATE HOLES FOR CAM BASE	11/3/2026	M. Newman

MATERIAL FINISH: Galvanized

MATERIAL SURFACE: TraxPlate™

Infrastructure JENSEN

527 Dunn Circle, Sparks, NV 89431
775-352-2716 FAX: 755-358-8127
JENSENMETALTECH.COM

©2026 Jensen Infrastructure - All rights reserved.
All materials appearing as Jensen Infrastructure documents and the like are proprietary work product and are protected under U.S. copyright and other laws. Unless in conjunction with business conducted with Jensen Infrastructure , any use of Jensen Infrastructure work product without express, written consent is prohibited, and recipient is prohibited from distributing any and all work product to non-approved third parties under penalty of civil action.
This product shall only be produced in a Jensen Infrastructure facility.

PART NUMBER & DESCRIPTION: 200018770
CAS2-3048-CH5-TRX-G-BD-WR-OH10

REV: C-3

WEIGHT: 405.18 Lbs

DRAWN BY: C. Heywood

CREATED: 3/29/2019

MODIFIED: 11/3/2026

SHEET: 2

BURN LIST - BOM

PART NAME	ITEM QTY	QTY	DESCRIPTION	STOCK NUMBER	MATERIAL	MASS	SHEET
200013553	10	73.867 lbmass	Door Component Steel Stiffener, Plate	100007734	STL ASTM A36 SM-HRPO 60X120 RAW .1875	7.387 lbmass	08
200017565	2	31.507 lbmass	Frame Component Steel Frame Side, Cast In	100007734	STL ASTM A36 SM-HRPO 60X120 RAW .1875	15.753 lbmass	09
200017566	2	26.274 lbmass	Frame Component Steel Frame End, Cast In	100007734	STL ASTM A36 SM-HRPO 60X120 RAW .1875	13.137 lbmass	10
200018789	1	77.524 lbmass	Door Component Steel Plate, Top	100007835	STL ASTM A36 SM-HRPO RAW .3125	77.524 lbmass	11
200018791	4	11.079 lbmass	Door Component Steel Side Bar	100007734	STL ASTM A36 SM-HRPO 60X120 RAW .1875	2.770 lbmass	12
200018794	1	77.745 lbmass	Door Component Steel Plate, Bottom	100007835	STL ASTM A36 SM-HRPO RAW .3125	77.745 lbmass	13
200020385	2	27.518 lbmass	Frame Component Steel Skirt Extension	100007734	STL ASTM A36 SM-HRPO 60X120 RAW .1875	13.759 lbmass	14
200020386	2	17.194 lbmass	Frame Component Steel Skirt Extension	100007734	STL ASTM A36 SM-HRPO 60X120 RAW .1875	8.597 lbmass	15
200087242	1	4.096 lbmass	Door Component Steel Lap Bar 30in, 2.5" Stiffener Offset	100007735	STL ASTM A36 SM-HRPO RAW .250	4.096 lbmass	16

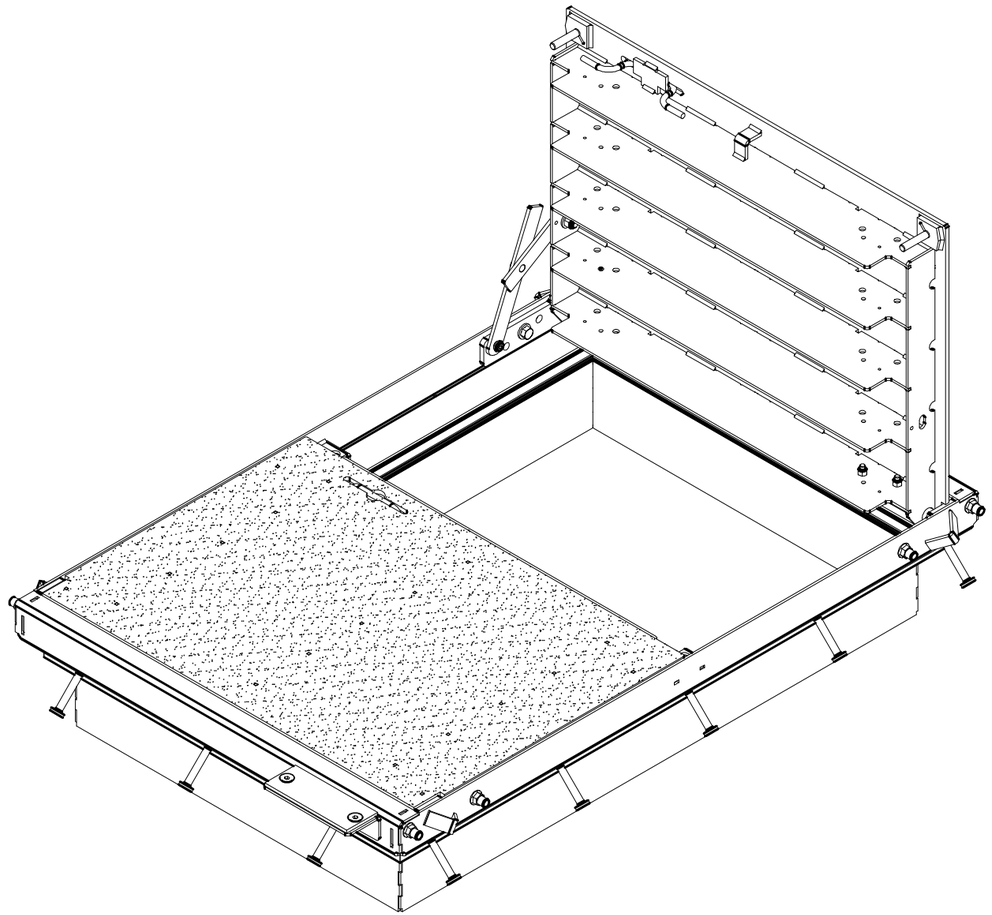

200018770.idw

MATERIAL FINISH: Galvanized

MATERIAL SURFACE: TraxPlate™

Infrastructure JENSEN
527 Dunn Circle, Sparks, NV 89431
775-352-2716 FAX: 755-358-8127
JENSENMETALTECH.COM

©2026 Jensen Infrastructure - All rights reserved.
All materials appearing as Jensen Infrastructure documents and the like are proprietary work product and are protected under U.S. copyright and other laws. Unless in conjunction with business conducted with Jensen Infrastructure , any use of Jensen Infrastructure work product without express, written consent is prohibited, and recipient is prohibited from distributing any and all work product to non-approved third parties under penalty of civil action.
This product shall only be produced in a Jensen Infrastructure facility.

PART NUMBER & DESCRIPTION: 200018770 CAS2-3048-CH5-TRX-G-BD-WR-OH10

REV: C-3

WEIGHT: 405.18 Lbs

DRAWN BY: C. Heywood

SHEET: 3

CREATED: 3/29/2019

MODIFIED: 11/3/2026

CUT LIST - BOM

PART NAME	ITEM QTY	BASE QTY	QTY	DESCRIPTION	PART NUMBER	MASS	SHEET
200048524	2	51.25 in	102.5000 in	Frame Component Steel Unistrut	100007972	8.1776 lbmass	17
200048525	2	33.25 in	66.5000 in	Frame Component Steel Unistrut	100007972	5.2218 lbmass	18

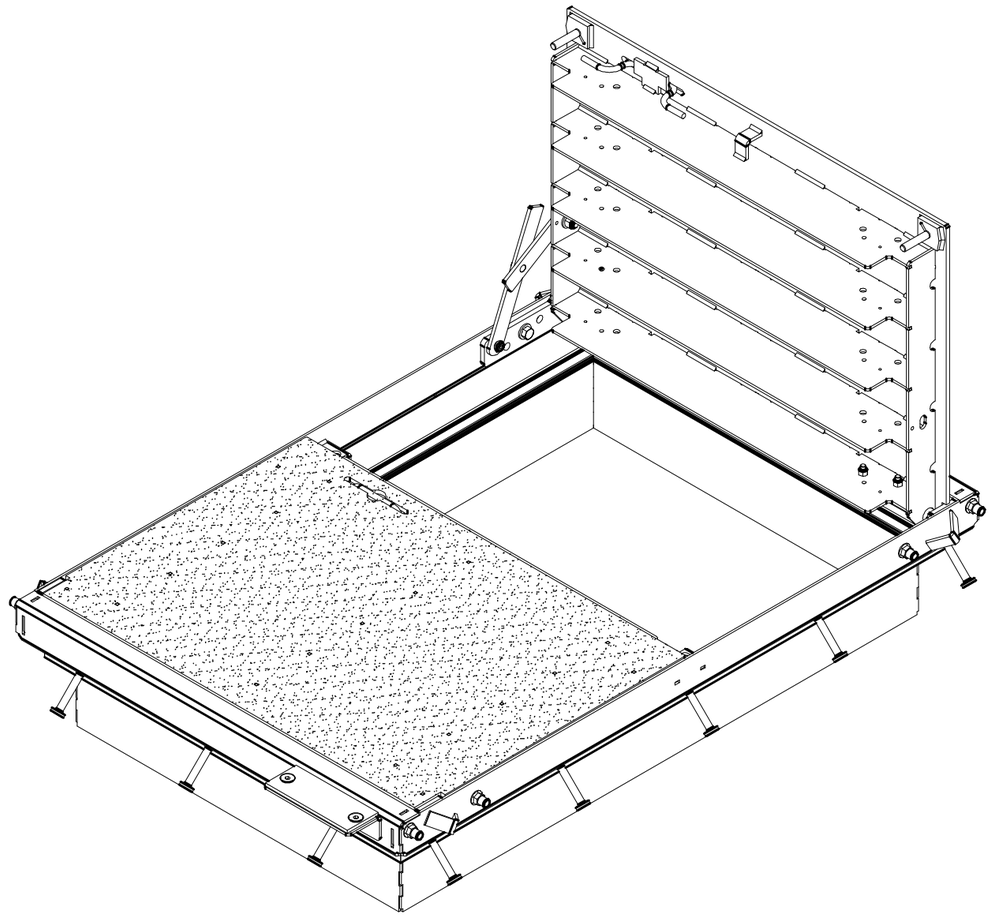

200018770.idw

MATERIAL FINISH: Galvanized

MATERIAL SURFACE: TraxPlate™

Infrastructure JENSEN

527 Dunn Circle, Sparks, NV 89431
775-352-2716 FAX: 755-358-8127
JENSENMETALTECH.COM

©2026 Jensen Infrastructure - All rights reserved.
All materials appearing as Jensen Infrastructure documents and the like are proprietary work product and are protected under U.S. copyright and other laws. Unless in conjunction with business conducted with Jensen Infrastructure , any use of Jensen Infrastructure work product without express, written consent is prohibited, and recipient is prohibited from distributing any and all work product to non-approved third parties under penalty of civil action.
This product shall only be produced in a Jensen Infrastructure facility.

PART NUMBER & DESCRIPTION: 200018770 CAS2-3048-CH5-TRX-G-BD-WR-OH10

REV: C-3

WEIGHT: 405.18 Lbs

DRAWN BY: C. Heywood

SHEET: 4

CREATED: 3/29/2019

MODIFIED: 11/3/2026

BILL OF MATERIALS

ITEM	ITEM QTY	QTY	PART NUMBER	DESCRIPTION	PART NAME
1	1	77.524 lbmass	100007835	Door Component Steel Plate, Top	200018789
2	2	5.540 lbmass	100007734	Door Component Steel Side Bar	200018791
3	5	36.934 lbmass	100007734	Door Component Steel Stiffener, Plate	200013553
4	1	1	100007644	LEAF PULL HANDLE A36 3/8IN DIAMETER	100007644
5	1	1	100007647	LIFTING BRACKET STEEL LEAF	100007647
6	1	1	100007646	HANDLE RETAINER STL	100007646
7	2	2	100007675	CAM BASE	100007675

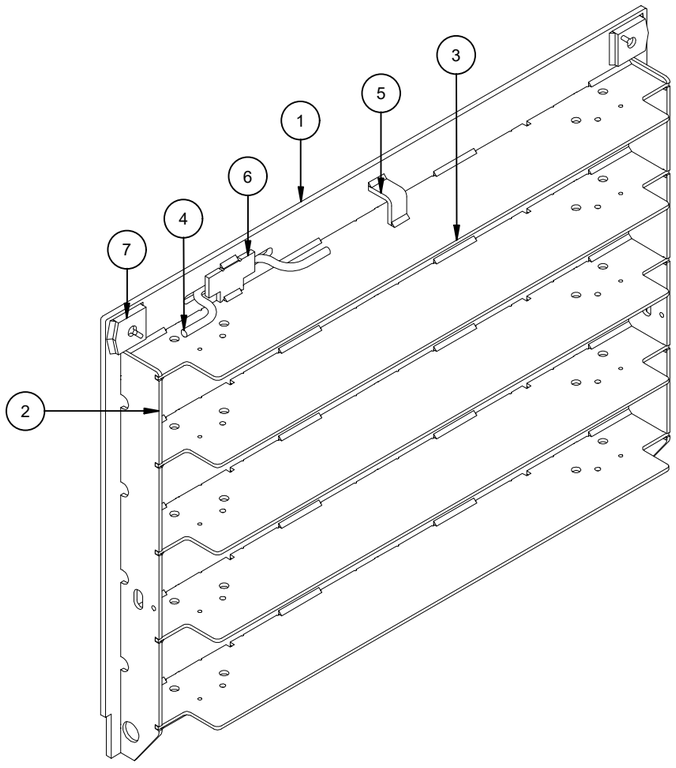

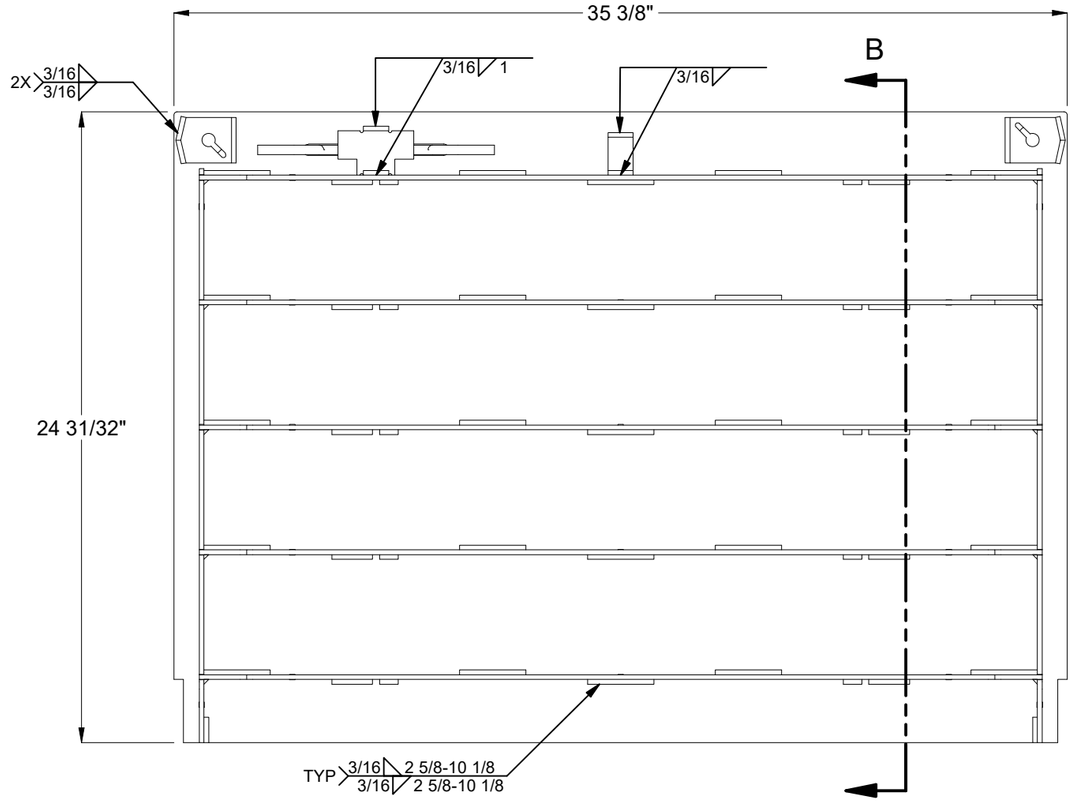

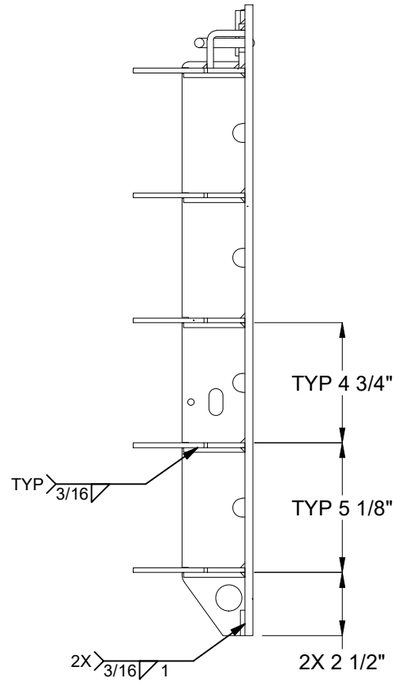

SECTION B-B
SCALE 1/6



MATERIAL FINISH: Raw	Infrastructure JENSEN 527 Dunn Circle, Sparks, NV 89431 775-352-2716 FAX: 755-358-8127 *JENSENMETALTECH.COM*	©2026 Jensen Infrastructure - All rights reserved. All materials appearing as Jensen Infrastructure documents and the like are proprietary work product and are protected under U.S. copyright and other laws. Unless in conjunction with business conducted with Jensen Infrastructure , any use of Jensen Infrastructure work product without express, written consent is prohibited, and recipient is prohibited from distributing any and all work product to non-approved third parties under penalty of civil action. This product shall only be produced in a Jensen Infrastructure facility.	PART NUMBER & DESCRIPTION: 200018788 DAS2-T-3048-H5-TRX-R-BD — REV: C-3
MATERIAL SURFACE: TraxPlate™			WEIGHT: 121.56 Lbs — DRAWN BY: C. Heywood — SHEET: 5
			CREATED: 3/29/2019 — MODIFIED: 11/3/2026

200018770.idw

BILL OF MATERIALS

ITEM	ITEM QTY	QTY	PART NUMBER	DESCRIPTION	PART NAME
1	1	77.745 lbmass	100007835	Door Component Steel Plate, Bottom	200018794
2	2	5.540 lbmass	100007734	Door Component Steel Side Bar	200018791
3	1	4.096 lbmass	100007735	Door Component Steel Lap Bar 30in, 2.5" Stiffener Offset	200087242
4	5	36.934 lbmass	100007734	Door Component Steel Stiffener, Plate	200013553
5	1	1	100007644	LEAF PULL HANDLE A36 3/8IN DIAMETER	100007644
6	1	1	100007647	LIFTING BRACKET STEEL LEAF	100007647

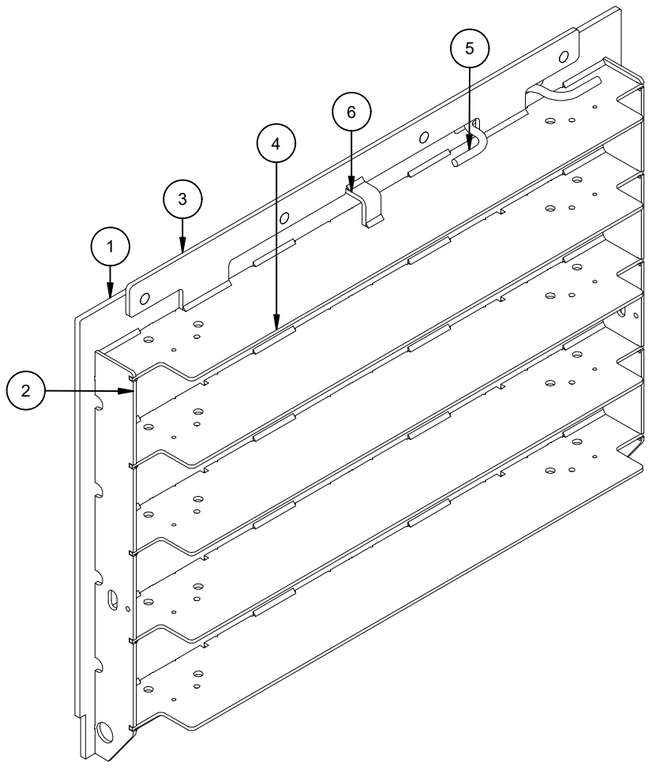

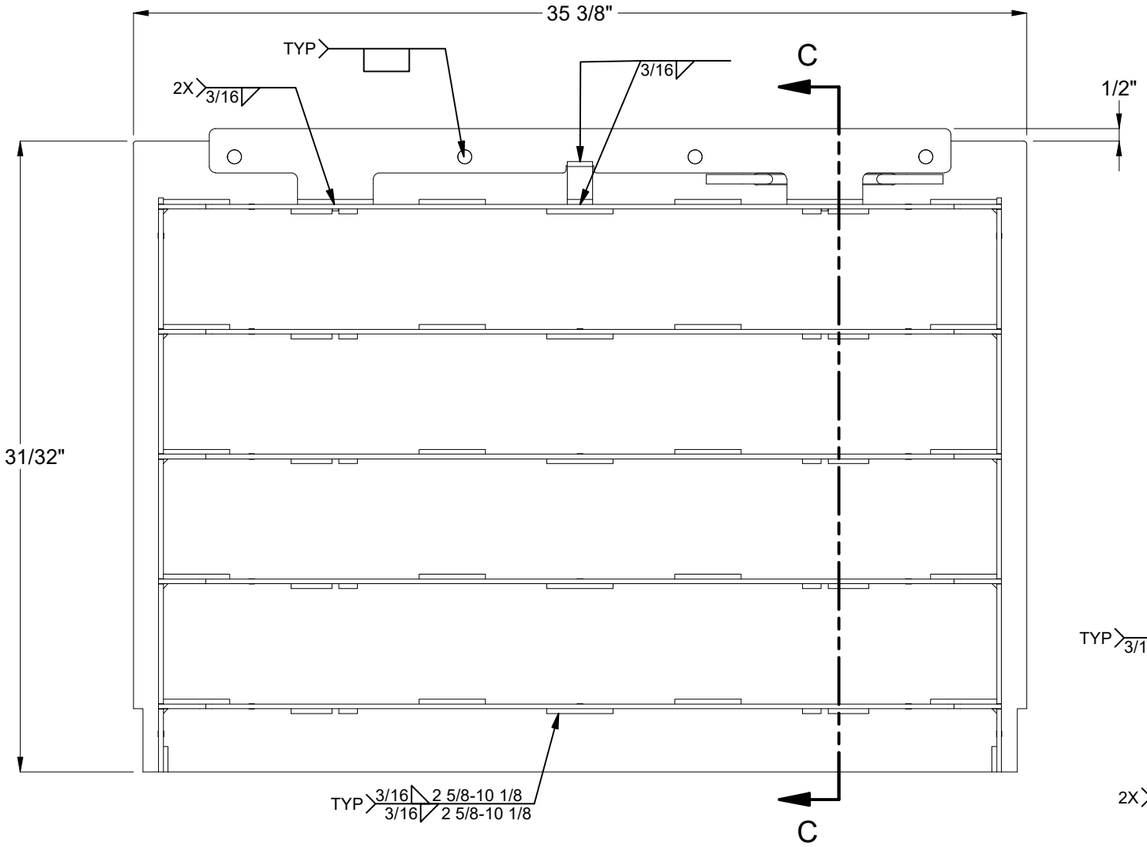

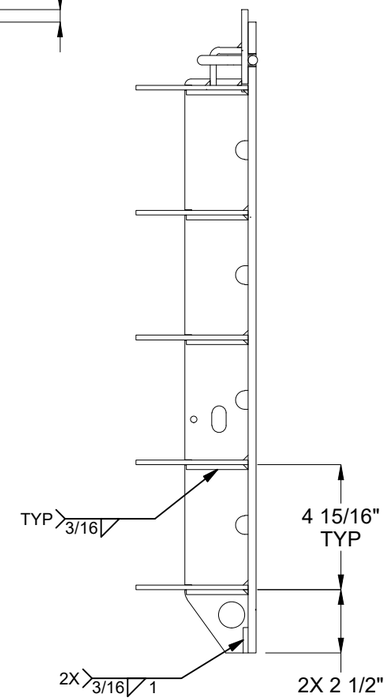

SECTION C-C
SCALE 1/6

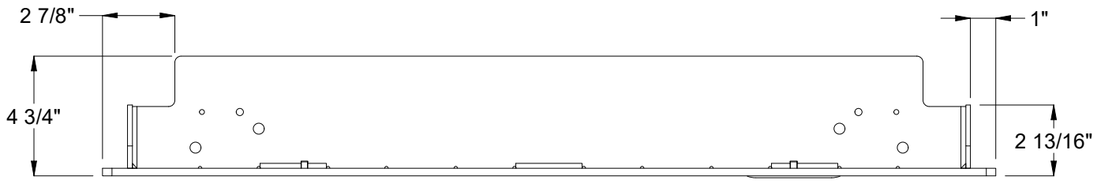

200018770.idw

MATERIAL FINISH: Raw	Infrastructure JENSEN 527 Dunn Circle, Sparks, NV 89431 775-352-2716 FAX: 755-358-8127 *JENSENMETALTECH.COM*	©2026 Jensen Infrastructure - All rights reserved. All materials appearing as Jensen Infrastructure documents and the like are proprietary work product and are protected under U.S. copyright and other laws. Unless in conjunction with business conducted with Jensen Infrastructure , any use of Jensen Infrastructure work product without express, written consent is prohibited, and recipient is prohibited from distributing any and all work product to non-approved third parties under penalty of civil action. This product shall only be produced in a Jensen Infrastructure facility.	PART NUMBER & DESCRIPTION: 200018793 DAS2-B-3048-H5-TRX-R-BD	REV: C-3
MATERIAL SURFACE: TraxPlate™			WEIGHT: 125.24 Lbs CREATED: 3/29/2019	DRAWN BY: C. Heywood MODIFIED: 11/3/2026
				SHEET: 6

BILL OF MATERIALS

ITEM	ITEM QTY	QTY	PART NUMBER	DESCRIPTION	PART NAME
1	2	31.507 lbmass	100007734	Frame Component Steel Frame Side, Cast In	200017565
2	4	4	200018691	FRAME BOLT DOUBLER SLOT	200018691
3	2	26.274 lbmass	100007734	Frame Component Steel Frame End, Cast In	200017566
4	2	17.194 lbmass	100007734	Frame Component Steel Skirt Extension	200020386
5	2	27.518 lbmass	100007734	Frame Component Steel Skirt Extension	200020385
6	2	2	100007728	NUT SELF-CLINCH 1/2-13 S-0813-1 RAW	100007728
7	4	4	100007641	FRAME LIFTING BRACKET	100007641
8	1	1	100007667	NAME PLATE FRAME ANGLE	100007667
9	16	16	100007886	Anchor Weld Stud - H4L - 0.5" - A29/A108 - 3.125"	100007886
10	2	2	100024179	SPRING NUT BRACKET	100024179
11	2	66.5000 in	100007972	Frame Component Steel Unistrut	200048525
12	2	102.5000 in	100007972	Frame Component Steel Unistrut	200048524

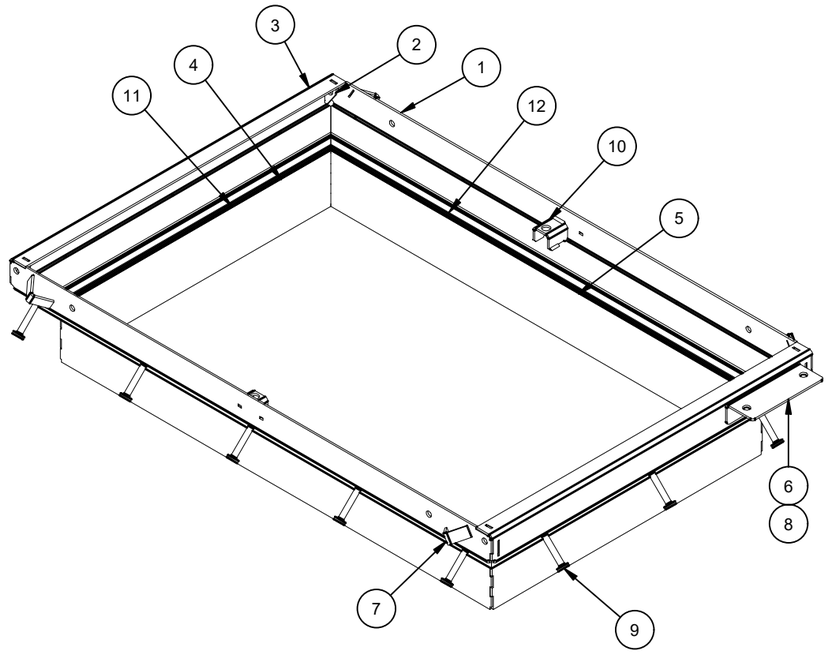

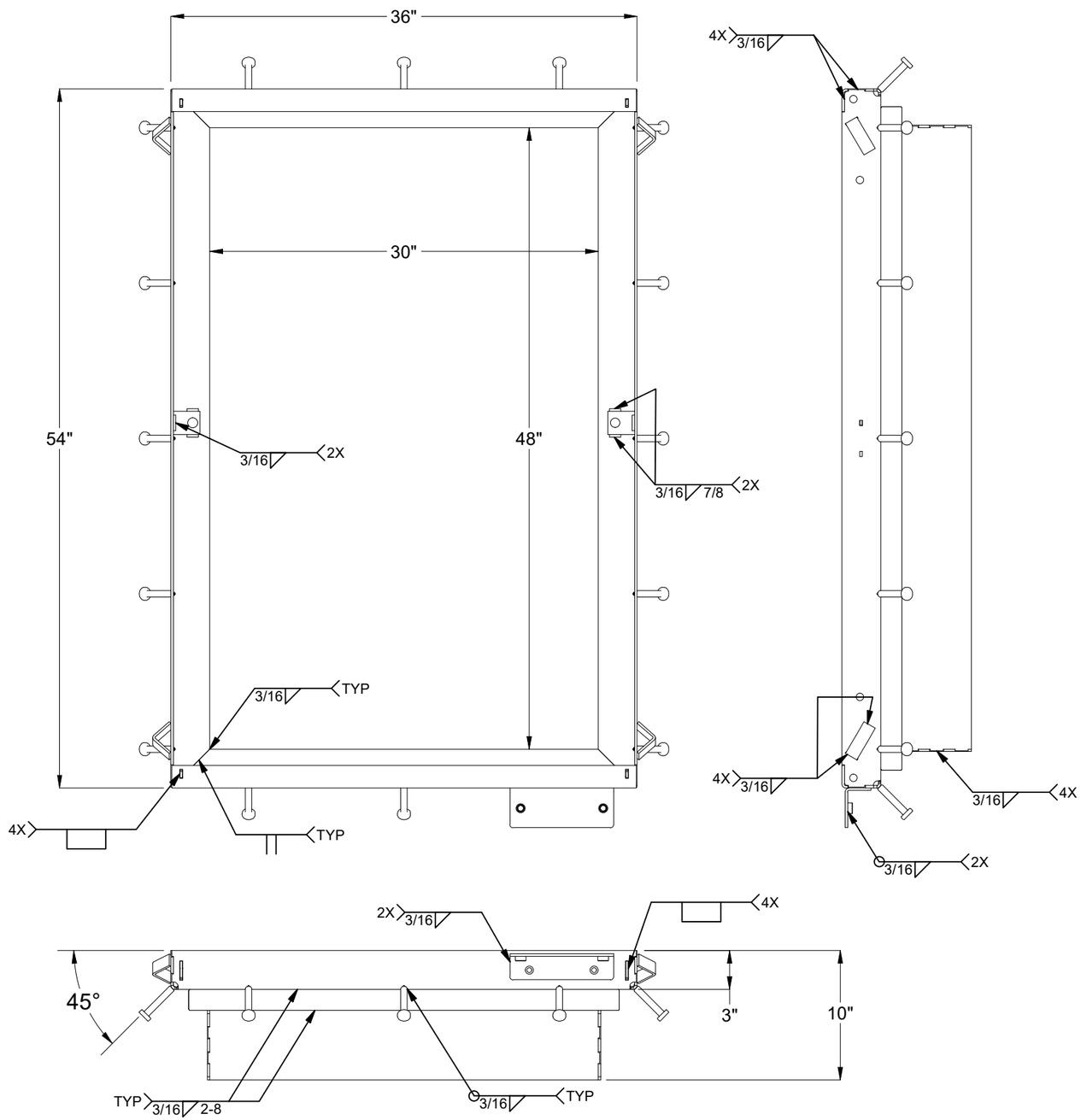

200018770.idw

MATERIAL FINISH: Raw	Infrastructure JENSEN 527 Dunn Circle, Sparks, NV 89431 775-352-2716 FAX: 755-358-8127 *JENSENMETALTECH.COM*	©2026 Jensen Infrastructure - All rights reserved. All materials appearing as Jensen Infrastructure documents and the like are proprietary work product and are protected under U.S. copyright and other laws. Unless in conjunction with business conducted with Jensen Infrastructure , any use of Jensen Infrastructure work product without express, written consent is prohibited, and recipient is prohibited from distributing any and all work product to non-approved third parties under penalty of civil action. This product shall only be produced in a Jensen Infrastructure facility.	PART NUMBER & DESCRIPTION: 200018771 FAS-3048-CH5-R-OH10 — REV: C-3
MATERIAL SURFACE: Smooth			WEIGHT: 140 Lbs — DRAWN BY: C. Heywood — SHEET: 7
			CREATED: 3/29/2019 — MODIFIED: 11/3/2026

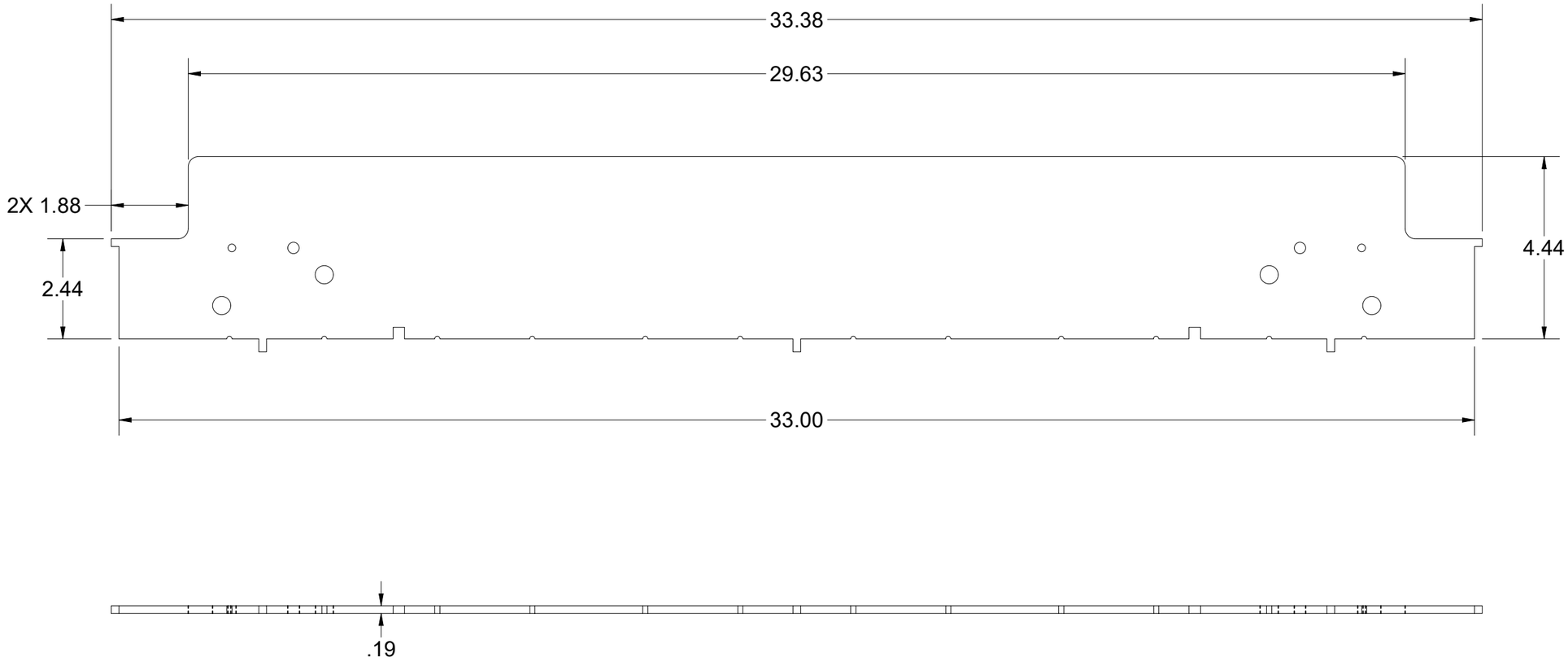

BEND TABLE				MATERIAL IFS: 100007734			
BEND RADIUS	V-OPENING	BEND ANGLE	BEND DEDUCTION	MATERIAL THK: 0.1875			
-	-	- 0	-	MAT DESCRIPTION: STL ASTM A36 SM-HRPO 60X120 RAW .1875			

Infrastructure JENSEN
527 Dunn Circle, Sparks, NV 89431
775-352-2716 FAX: 755-358-8127
JENSENMETALTECH.COM

©2026 Jensen Infrastructure - All rights reserved.
All materials appearing as Jensen Infrastructure documents and the like are proprietary work product and are protected under U.S. copyright and other laws. Unless in conjunction with business conducted with Jensen Infrastructure , any use of Jensen Infrastructure work product without express, written consent is prohibited, and recipient is prohibited from distributing any and all work product to non-approved third parties under penalty of civil action.
This product shall only be produced in a Jensen Infrastructure facility.

NAME & DESCRIPTION:		REV:
200013553 Door Component Steel Stiffener, Plate		C-3
WEIGHT: 7.387 lbmass	DRAWN BY: C. Heywood	SHEET: 8 OF 18
CREATED: 3/29/2019	MODIFIED: 11/3/2026	

200018770.idw

SYMMETRIC

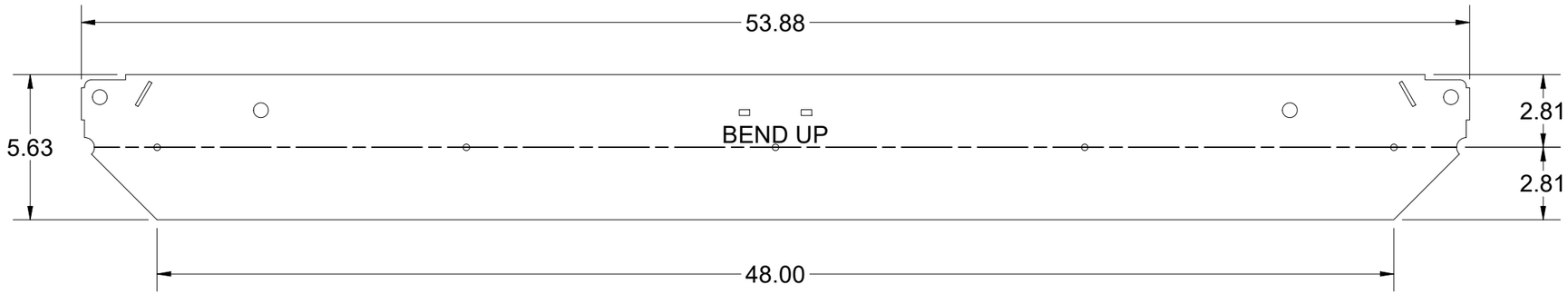

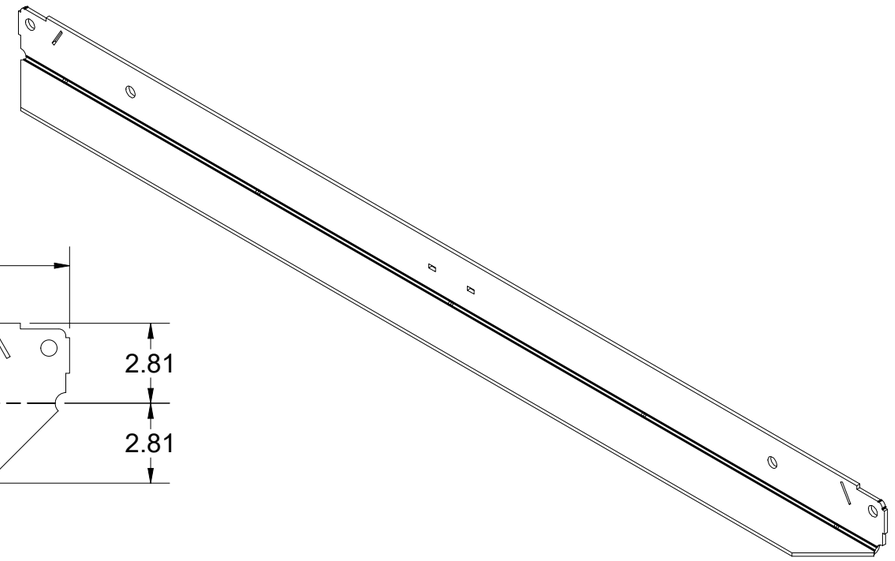

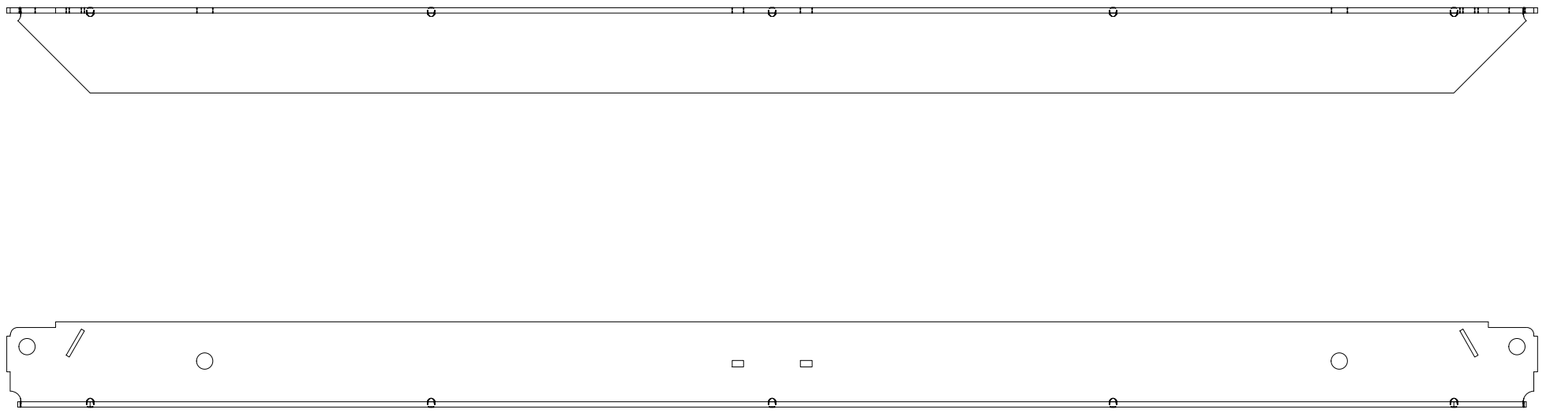

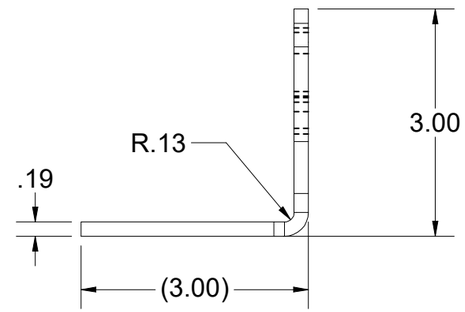

BEND TABLE				MATERIAL IFS: 100007734
BEND RADIUS	V-OPENING	BEND ANGLE	BEND DEDUCTION	MATERIAL THK: 0.1875
0.125	2	90	0.375	MAT DESCRIPTION: STL ASTM A36 SM-HRPO 60X120 RAW .1875

Infrastructure JENSEN
527 Dunn Circle, Sparks, NV 89431
775-352-2716 FAX: 755-358-8127
JENSENMETALTECH.COM

©2026 Jensen Infrastructure - All rights reserved.
All materials appearing as Jensen Infrastructure documents and the like are proprietary work product and are protected under U.S. copyright and other laws. Unless in conjunction with business conducted with Jensen Infrastructure , any use of Jensen Infrastructure work product without express, written consent is prohibited, and recipient is prohibited from distributing any and all work product to non-approved third parties under penalty of civil action.
This product shall only be produced in a Jensen Infrastructure facility.

NAME & DESCRIPTION: 200017565 Frame Component Steel Frame Side, Cast In		REV: C-3
WEIGHT: 15.753 lbmass	DRAWN BY: C. Heywood	SHEET: 9 OF 18
CREATED: 3/29/2019	MODIFIED: 11/3/2026	

200018770.idw

NON-SYMMETRIC

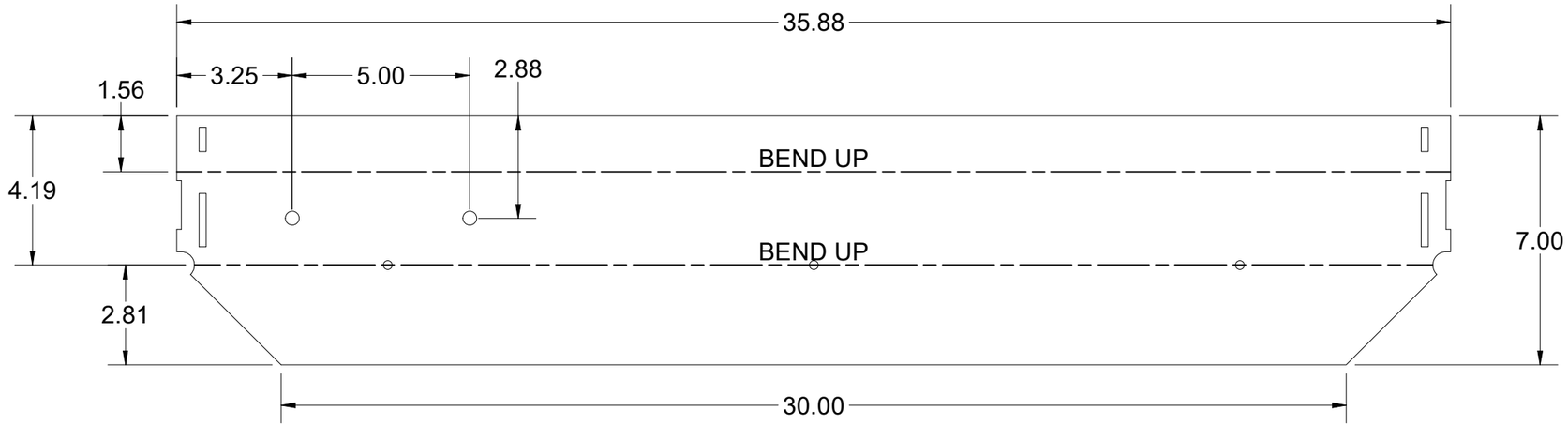

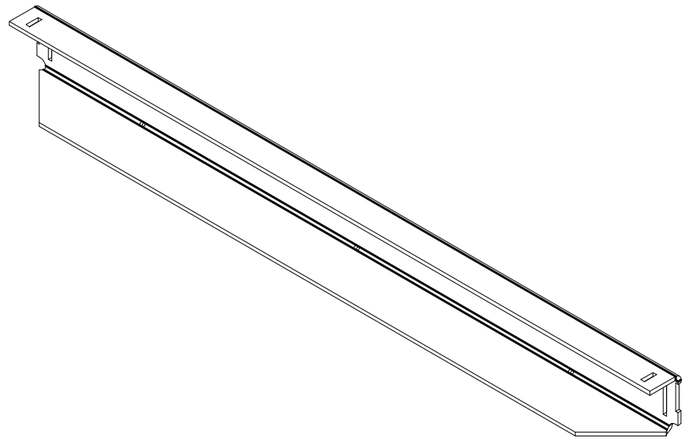

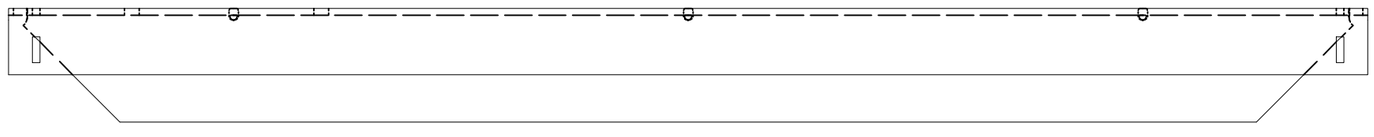

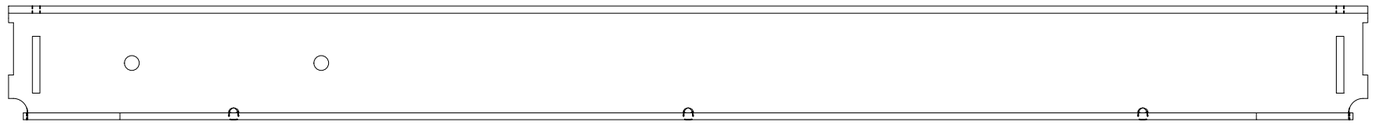

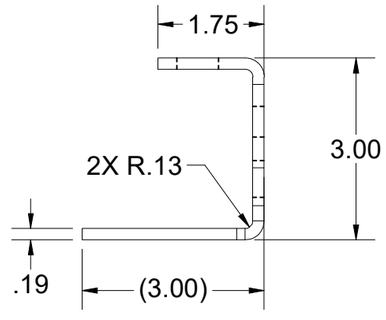

BEND TABLE				MATERIAL IFS: 100007734
BEND RADIUS	V-OPENING	BEND ANGLE	BEND DEDUCTION	MATERIAL THK: 0.1875
0.125	2	90	0.375	MAT DESCRIPTION: STL ASTM A36 SM-HRPO 60X120 RAW .1875

Infrastructure JENSEN

527 Dunn Circle, Sparks, NV 89431
775-352-2716 FAX: 755-358-8127
JENSENMETALTECH.COM

©2026 Jensen Infrastructure - All rights reserved.
All materials appearing as Jensen Infrastructure documents and the like are proprietary work product and are protected under U.S. copyright and other laws. Unless in conjunction with business conducted with Jensen Infrastructure , any use of Jensen Infrastructure work product without express, written consent is prohibited, and recipient is prohibited from distributing any and all work product to non-approved third parties under penalty of civil action.
This product shall only be produced in a Jensen Infrastructure facility.

NAME & DESCRIPTION:	200017566 Frame Component Steel Frame End, Cast In		REV: C-3
WEIGHT: 13.137 lbmass		DRAWN BY: C. Heywood	SHEET: 10 OF 18
CREATED: 3/29/2019		MODIFIED: 11/3/2026	

200018770.idw

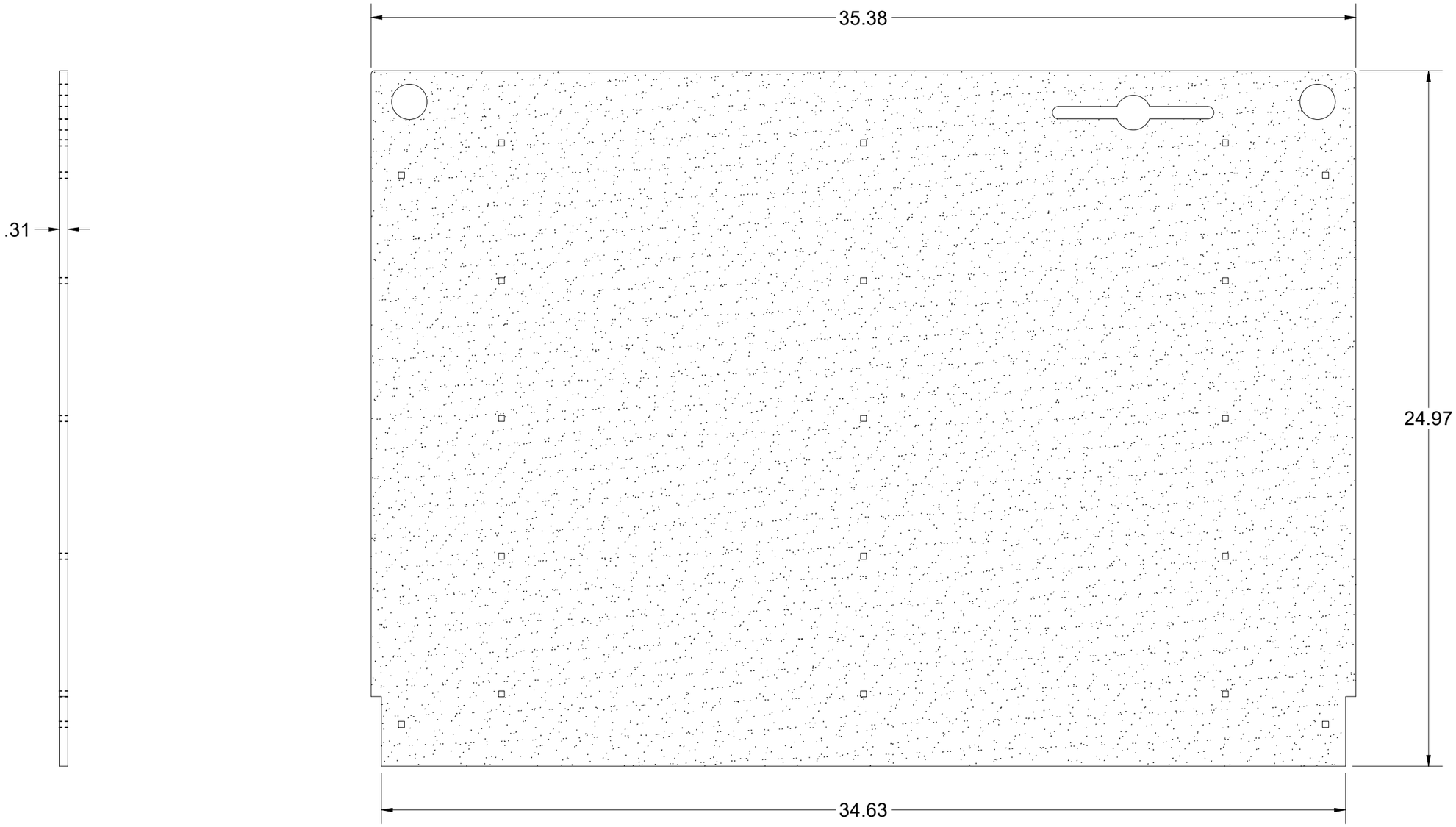

BEND TABLE				MATERIAL IFS: 100007835
BEND RADIUS	V-OPENING	BEND ANGLE	BEND DEDUCTION	MATERIAL THK: 0.3125
-	-	- 0	-	MAT DESCRIPTION: STL ASTM A36 SM-HRPO RAW .3125

Infrastructure
JENSEN
527 Dunn Circle, Sparks, NV 89431
775-352-2716 FAX: 755-358-8127
JENSENMETALTECH.COM

©2026 Jensen Infrastructure - All rights reserved.
All materials appearing as Jensen Infrastructure documents and the like are proprietary work product and are protected under U.S. copyright and other laws.
Unless in conjunction with business conducted with Jensen Infrastructure , any use of Jensen Infrastructure work product without express, written consent is prohibited, and recipient is prohibited from distributing any and all work product to non-approved third parties under penalty of civil action.
This product shall only be produced in a Jensen Infrastructure facility.

NAME & DESCRIPTION:	200018789 Door Component Steel Plate, Top	REV: C-3
WEIGHT: 77.524 lbmass	DRAWN BY: C. Heywood	SHEET: 11 OF 18
CREATED: 3/29/2019	MODIFIED: 11/3/2026	

200018770.idw

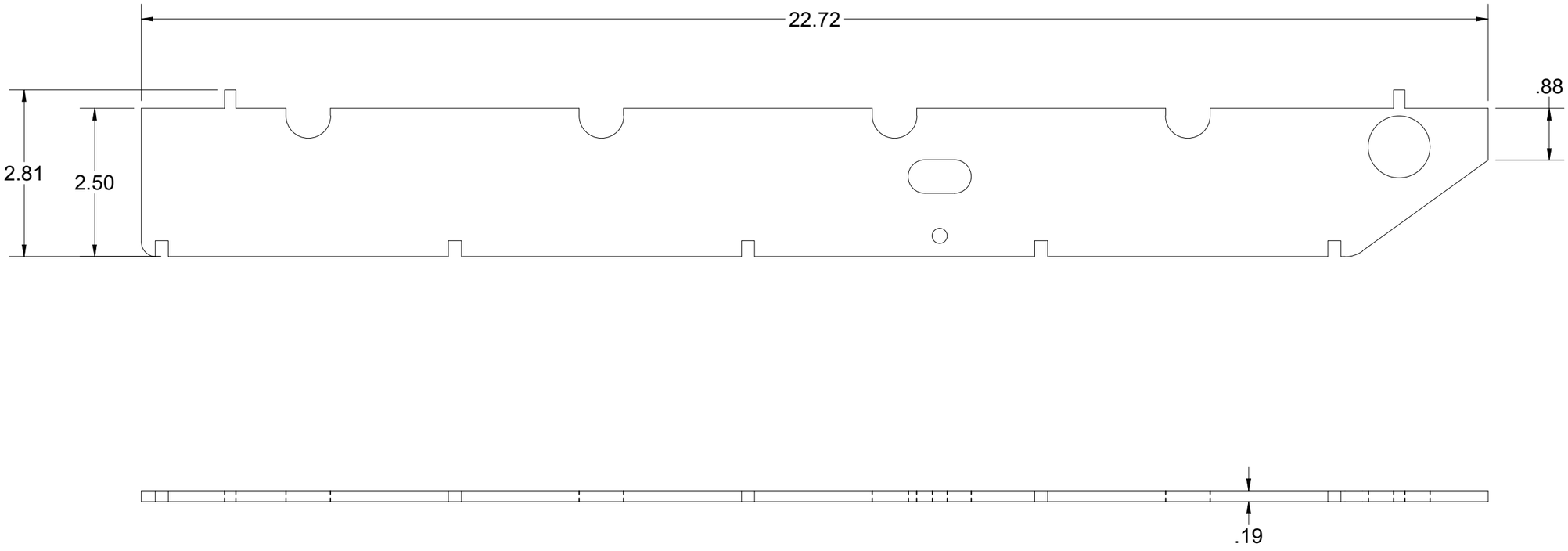

BEND TABLE				MATERIAL IFS: 100007734
BEND RADIUS	V-OPENING	BEND ANGLE	BEND DEDUCTION	MATERIAL THK: 0.1875
-	-	- 0	-	MAT DESCRIPTION: STL ASTM A36 SM-HRPO 60X120 RAW .1875

Infrastructure
JENSEN
527 Dunn Circle, Sparks, NV 89431
775-352-2716 FAX: 755-358-8127
JENSENMETALTECH.COM

©2026 Jensen Infrastructure - All rights reserved.
All materials appearing as Jensen Infrastructure documents and the like are proprietary work product and are protected under U.S. copyright and other laws. Unless in conjunction with business conducted with Jensen Infrastructure , any use of Jensen Infrastructure work product without express, written consent is prohibited, and recipient is prohibited from distributing any and all work product to non-approved third parties under penalty of civil action.
This product shall only be produced in a Jensen Infrastructure facility.

NAME & DESCRIPTION:	200018791 Door Component Steel Side Bar	REV: C-3
WEIGHT: 2.770 lbmass	DRAWN BY: C. Heywood	SHEET: 12 OF 18
CREATED: 3/29/2019	MODIFIED: 11/3/2026	

200018770.idw

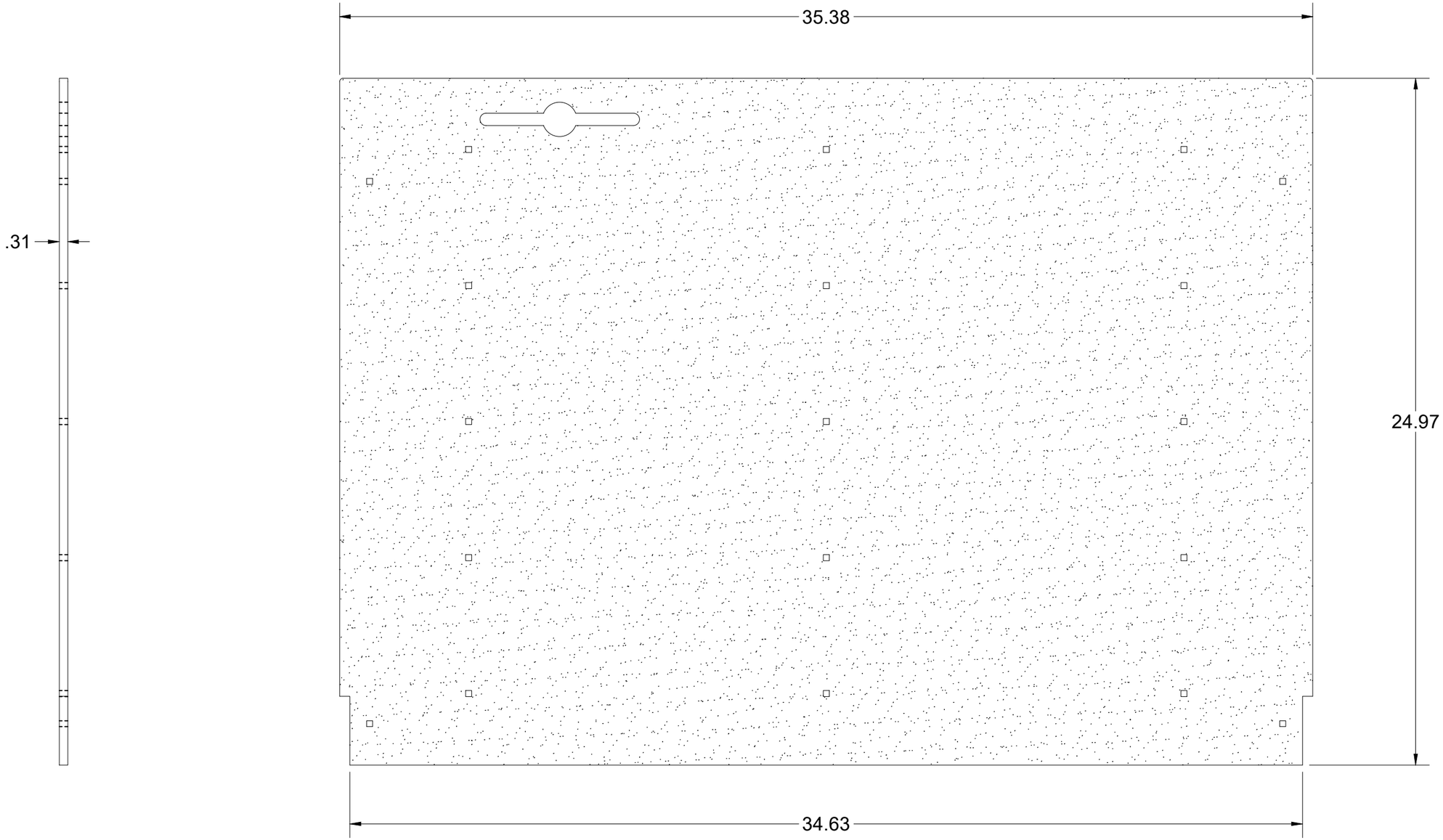

200018770.idw

BEND TABLE			
BEND RADIUS	V-OPENING	BEND ANGLE	BEND DEDUCTION
-	-	- 0	-

MATERIAL IFS: 100007835

MATERIAL THK: 0.3125

MAT DESCRIPTION: STL ASTM A36 SM-HRPO RAW .3125

Infrastructure
JENSEN
527 Dunn Circle, Sparks, NV 89431
775-352-2716 FAX: 755-358-8127
JENSENMETALTECH.COM

©2026 Jensen Infrastructure - All rights reserved.
All materials appearing as Jensen Infrastructure documents and the like are proprietary work product and are protected under U.S. copyright and other laws. Unless in conjunction with business conducted with Jensen Infrastructure , any use of Jensen Infrastructure work product without express, written consent is prohibited, and recipient is prohibited from distributing any and all work product to non-approved third parties under penalty of civil action.
This product shall only be produced in a Jensen Infrastructure facility.

NAME & DESCRIPTION: 200018794
Door Component Steel Plate, Bottom

REV: C-3

WEIGHT: 77.745 lbmass

DRAWN BY: C. Heywood

CREATED: 3/29/2019

MODIFIED: 11/3/2026

SHEET: 13 OF 18

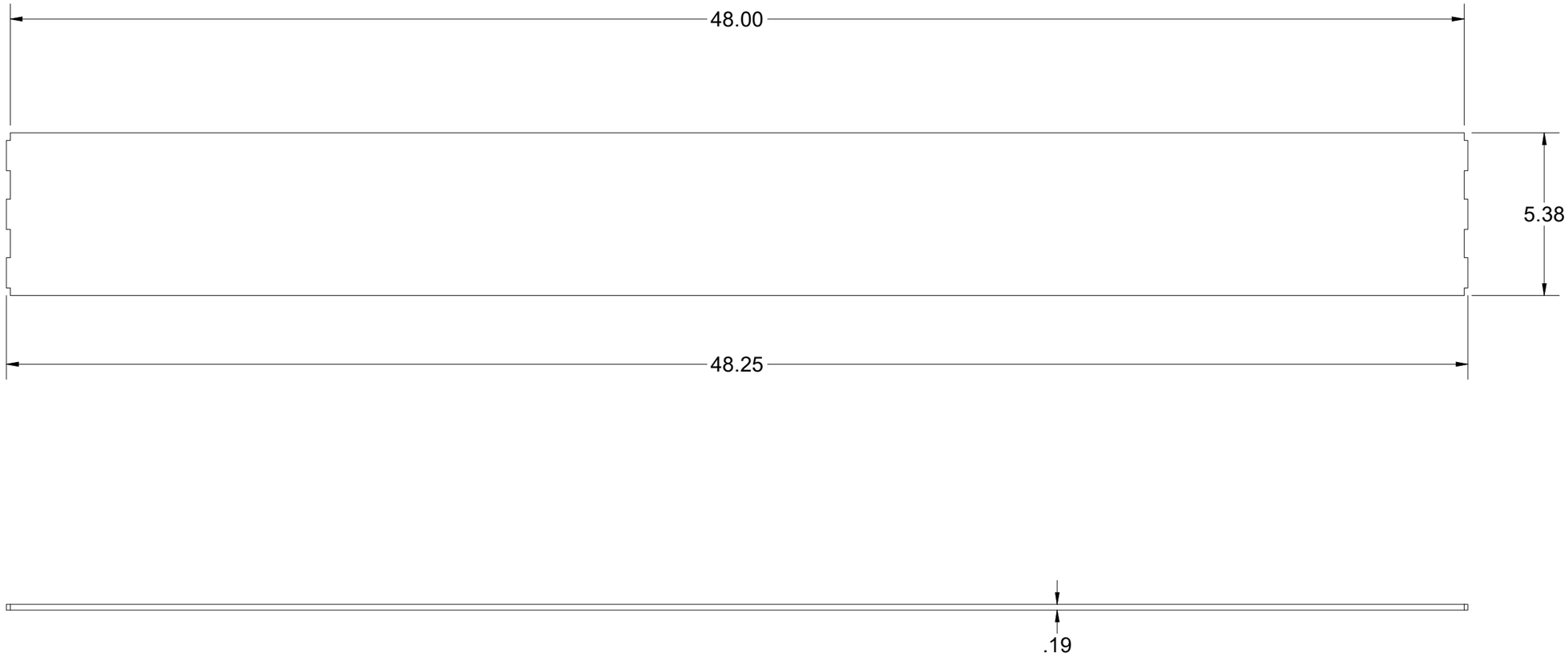

BEND TABLE			
BEND RADIUS	V-OPENING	BEND ANGLE	BEND DEDUCTION
-	-	- 0	-

MATERIAL IFS: 100007734

MATERIAL THK: 0.1875

MAT DESCRIPTION: STL ASTM A36 SM-HRPO 60X120 RAW .1875

Infrastructure
JENSEN
527 Dunn Circle, Sparks, NV 89431
775-352-2716 FAX: 755-358-8127
JENSENMETALTECH.COM

©2026 Jensen Infrastructure - All rights reserved.
All materials appearing as Jensen Infrastructure documents and the like are proprietary work product and are protected under U.S. copyright and other laws. Unless in conjunction with business conducted with Jensen Infrastructure , any use of Jensen Infrastructure work product without express, written consent is prohibited, and recipient is prohibited from distributing any and all work product to non-approved third parties under penalty of civil action.
This product shall only be produced in a Jensen Infrastructure facility.

NAME & DESCRIPTION: 200020385
Frame Component Steel Skirt Extension

REV: C-3

WEIGHT: 13.759 lbmass

DRAWN BY: C. Heywood

CREATED: 3/29/2019

MODIFIED: 11/3/2026

SHEET: 14 OF 18

200018770.idw

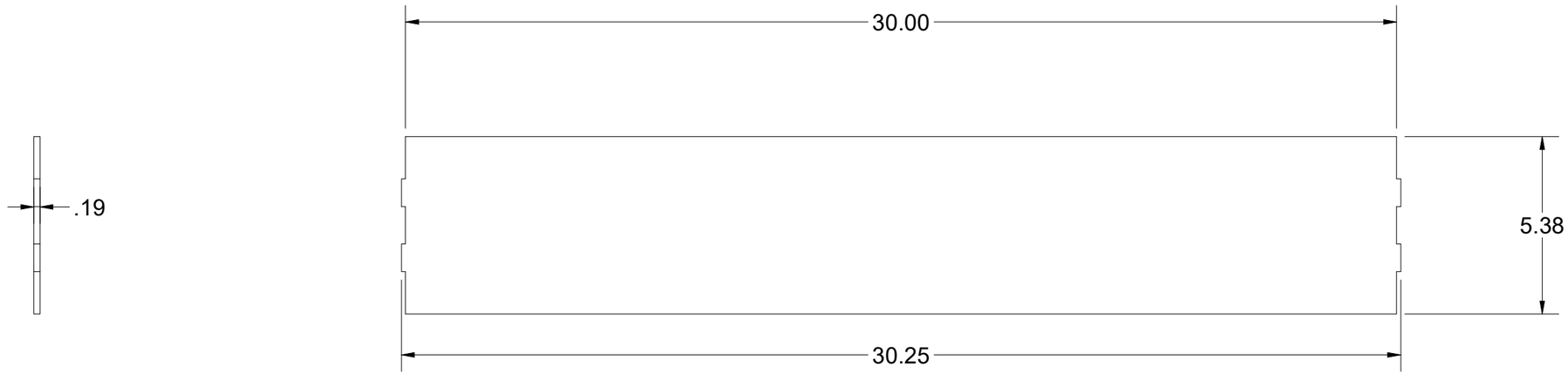

BEND TABLE				MATERIAL IFS: 100007734
BEND RADIUS	V-OPENING	BEND ANGLE	BEND DEDUCTION	MATERIAL THK: 0.1875
-	-	- 0	-	MAT DESCRIPTION: STL ASTM A36 SM-HRPO 60X120 RAW .1875

Infrastructure
JENSEN
527 Dunn Circle, Sparks, NV 89431
775-352-2716 FAX: 755-358-8127
JENSENMETALTECH.COM

©2026 Jensen Infrastructure - All rights reserved.
All materials appearing as Jensen Infrastructure documents and the like are proprietary work product and are protected under U.S. copyright and other laws. Unless in conjunction with business conducted with Jensen Infrastructure , any use of Jensen Infrastructure work product without express, written consent is prohibited, and recipient is prohibited from distributing any and all work product to non-approved third parties under penalty of civil action.
This product shall only be produced in a Jensen Infrastructure facility.

NAME & DESCRIPTION:	200020386 Frame Component Steel Skirt Extension	REV: C-3
WEIGHT: 8.597 lbmass	DRAWN BY: C. Heywood	SHEET: 15 OF 18
CREATED: 3/29/2019	MODIFIED: 11/3/2026	

200018770.idw

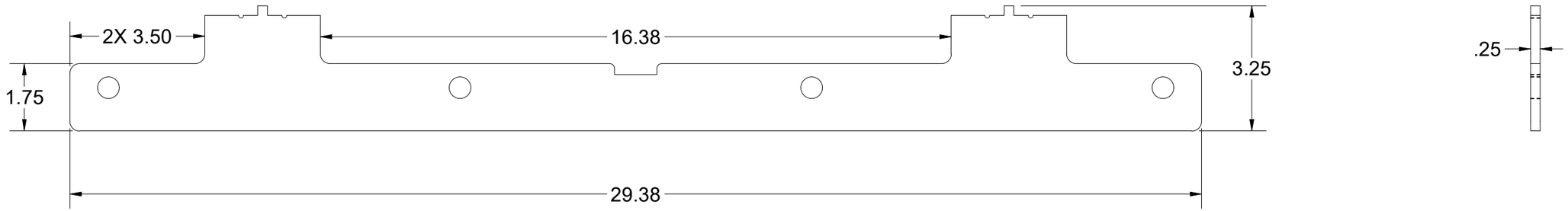

BEND TABLE				MATERIAL IFS: 100007735
BEND RADIUS	V-OPENING	BEND ANGLE	BEND DEDUCTION	MATERIAL THK: 0.25
-	-	-	-	MAT DESCRIPTION: STL ASTM A36 SM-HRPO RAW .250

Infrastructure
JENSEN
527 Dunn Circle, Sparks, NV 89431
775-352-2716 FAX: 755-358-8127
JENSENMETALTECH.COM

©2026 Jensen Infrastructure - All rights reserved.
All materials appearing as Jensen Infrastructure documents and the like are proprietary work product and are protected under U.S. copyright and other laws. Unless in conjunction with business conducted with Jensen Infrastructure , any use of Jensen Infrastructure work product without express, written consent is prohibited, and recipient is prohibited from distributing any and all work product to non-approved third parties under penalty of civil action.
This product shall only be produced in a Jensen Infrastructure facility.

NAME & DESCRIPTION: 200087242 — Door Component Steel Lap Bar 30in, 2.5" Stiffener Offset		REV: C-3
WEIGHT: 4.096 lbmass	DRAWN BY: C. Heywood	SHEET: 16 OF 18
CREATED: 3/29/2019	MODIFIED: 11/3/2026	

200018770.idw

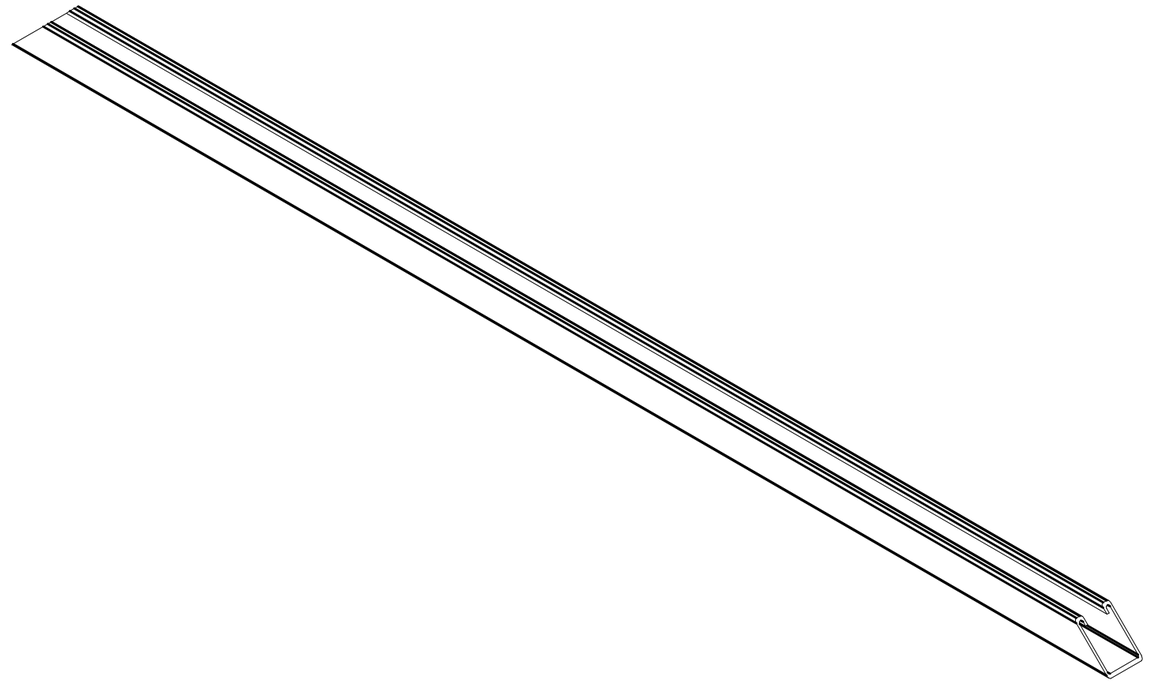

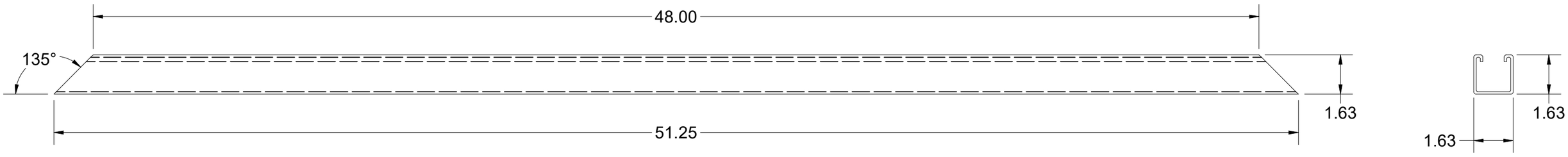

BEND TABLE				MATERIAL IFS: 100007972
BEND RADIUS	V-OPENING	BEND ANGLE	BEND DEDUCTION	MATERIAL THK:
				MAT DESCRIPTION: Steel, Mild

Infrastructure
JENSEN
527 Dunn Circle, Sparks, NV 89431
775-352-2716 FAX: 755-358-8127
JENSENMETALTECH.COM

©2026 Jensen Infrastructure - All rights reserved.
All materials appearing as Jensen Infrastructure documents and the like are proprietary work product and are protected under U.S. copyright and other laws. Unless in conjunction with business conducted with Jensen Infrastructure , any use of Jensen Infrastructure work product without express, written consent is prohibited, and recipient is prohibited from distributing any and all work product to non-approved third parties under penalty of civil action.
This product shall only be produced in a Jensen Infrastructure facility.

NAME & DESCRIPTION: 200048524 Frame Component Steel Unistrut		REV: C-3
WEIGHT: 8.178 lbmass	DRAWN BY: C. Heywood	SHEET: 17 OF 18
CREATED: 3/29/2019	MODIFIED: 11/3/2026	

200018770.idw

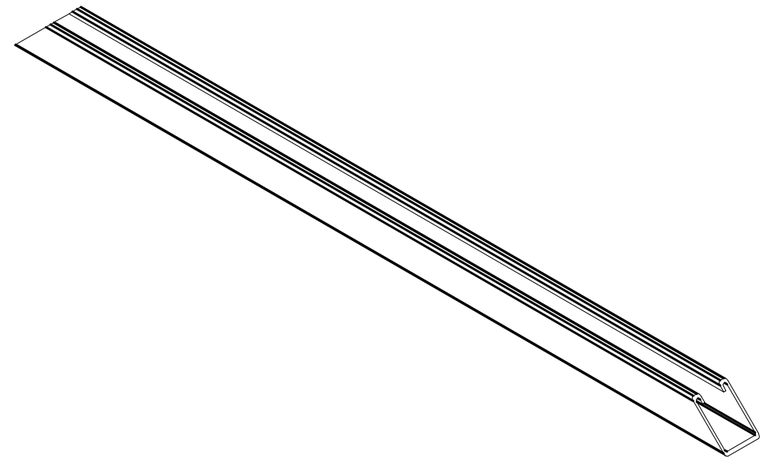

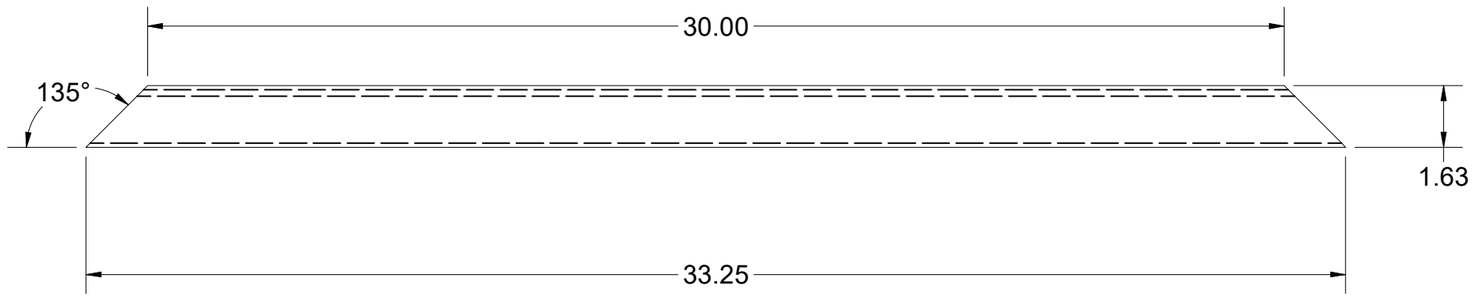

BEND TABLE				MATERIAL IFS: 100007972			
BEND RADIUS	V-OPENING	BEND ANGLE	BEND DEDUCTION	MATERIAL THK:			
				MAT DESCRIPTION: Steel, Mild			

Infrastructure
JENSEN
527 Dunn Circle, Sparks, NV 89431
775-352-2716 FAX: 755-358-8127
JENSENMETALTECH.COM

©2026 Jensen Infrastructure - All rights reserved.
All materials appearing as Jensen Infrastructure documents and the like are proprietary work product and are protected under U.S. copyright and other laws. Unless in conjunction with business conducted with Jensen Infrastructure , any use of Jensen Infrastructure work product without express, written consent is prohibited, and recipient is prohibited from distributing any and all work product to non-approved third parties under penalty of civil action.
This product shall only be produced in a Jensen Infrastructure facility.

NAME & DESCRIPTION: 200048525 Frame Component Steel Unistrut		REV: C-3
WEIGHT: 5.222 lbmass	DRAWN BY: C. Heywood	SHEET: 18 OF 18
CREATED: 3/29/2019	MODIFIED: 11/3/2026	

200018770.idw