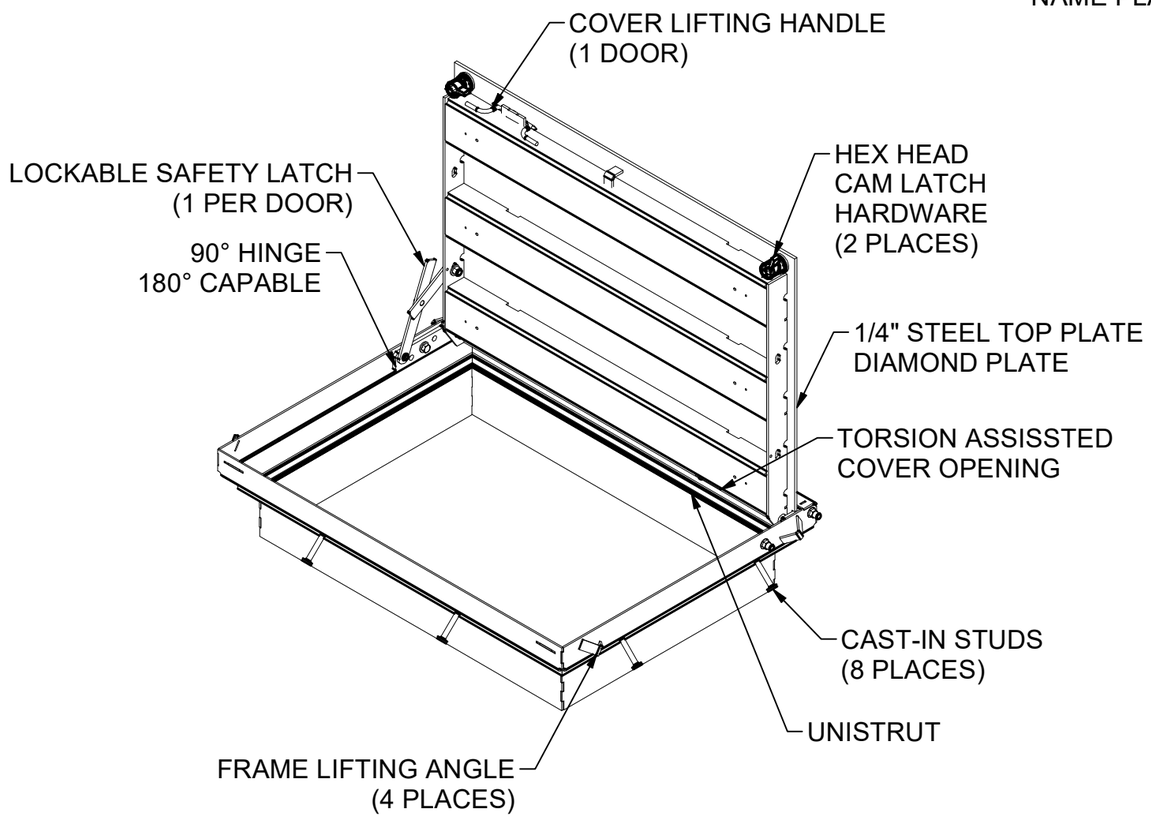

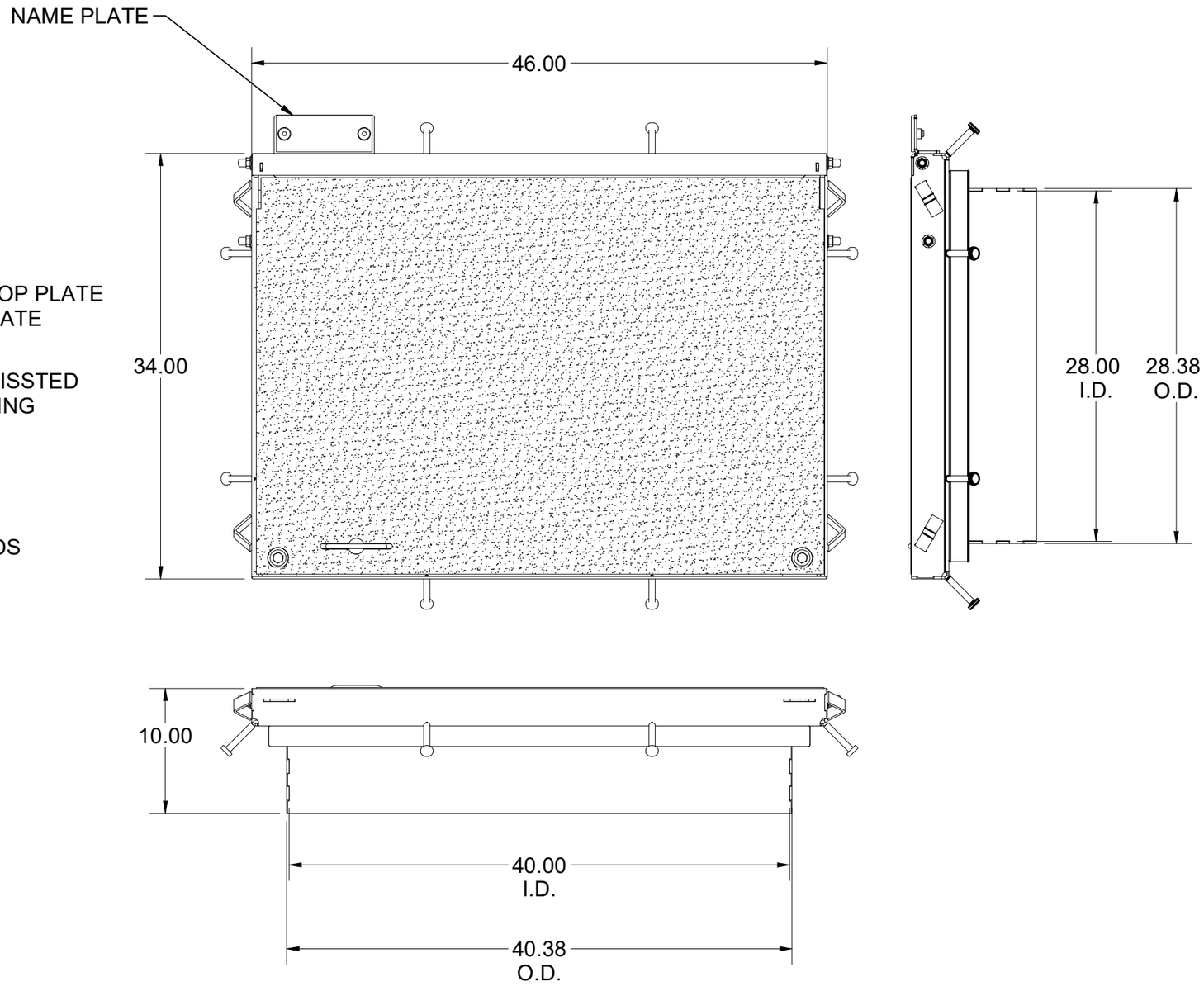

200018753.idw

LOADING CRITERIA: ASTM C1802 Load Level 05

16,000 lb load on 10" x 20" footprint, with 30% impact restricted to unrestricted parking lanes and alleyways where traffic speed is limited to 15 miles per hour.

SURFACE:	TraxPlate™	FINISH:	Galvanized
WEIGHT:	332.78 lbs	MARKING:	None

Infrastructure
JENSEN
527 Dunn Circle, Sparks, NV 89431
775-352-2716 FAX: 755-358-8127
JENSENMETALTECH.COM

©2026 Jensen Infrastructure - All rights reserved.
All materials appearing as Jensen Infrastructure documents and the like are proprietary work product and are protected under U.S. copyright and other laws. Unless in conjunction with business conducted with Jensen Infrastructure , any use of Jensen Infrastructure work product without express, written consent is prohibited, and recipient is prohibited from distributing any and all work product to non-approved third parties under penalty of civil action.
This product shall only be produced in a Jensen Infrastructure facility.

DESCRIPTION: CAS1-2840-CH5-TRX-G-CL-WR-OH10

28x40 Standard Cover Assembly (ASTM C1802 Load Level 05, Steel, Hinged, Handle (1 Per Door), TraxPlate™, Galvanized, N/A, N/A) 10

PART NUMBER:	200018753	DRAWN BY:	C. Heywood
CREATED:	3/29/2019	MODIFIED:	9/30/2026

REV: E-2-1

SHEET: 1

BILL OF MATERIALS

ITEM	ITEM QTY	QTY	PART NUMBER	DESCRIPTION	PART NAME
1	1	1	200050590	DAS1-SD-2840-H5-TRX-R	200050590
2	1	1	200050594	FAS-2840-CH5-R-OH13	200050594
3	4	4	100011418	WASHER FLAT 1/2 NARROW ZINC	100011418
4	2	2	100011407	Hex Bolt 1/2-13 UNC ZINC - PT - 2.25"	100011407
5	4	4	100007939	CAP VINYL .467 X 1/2	100007939
6	1	1	100007933	SAFETY LATCH ASSY FOR UNI AND 90 D HINGE	100007933
7	2	2	100007918	Cotter Pin 0.094x1.25" 18-8SS	100007918
8	2	2	100007915	SPRING COMPRESSION 055 X 5/8 X 7/8 LONG	100007915
9	1	1	100007876	Bolt Shoulder Socket Head - 3/8-16 UNC - SD-0.5" - SL-0.3125" - Grade 5 - Zinc	100007876
10	2	2	100007873	BOLT SHCS 3/8-16 X 1-1/4 PLATED	100007873
11	2	2	100007869	BOLT SHCS 1/2-13 X 1-3/4 SS	100007869
12	2	2	100007859	RIVET NUT 3/8-16 FLAT KNURLED	100007859
13	2	2	100007857	NUT FINGER 1/2-13 BRASS	100007857
14	2	2	100007733	Bolt Socket Flat Countersunk Head - 1/2-13 UNC - Grade 5 - Zinc - FT - 1"	100007733
15	2	2	100007729	HEX NUT SLOTTED CASTLE HEAD 1/2-13 SS	100007729
16	1	1	100007727	TORSION HEX ROD .5 x 36in RAW	100007727
17	1	1	100007671	SPRING MOUNT ASSY .500	100007671
18	1	1	100007666	Hinge Assembly, Right, Steel	100007666
19	1	1	100007659	Hinge Assembly, Left, 1/2, Steel	100007659
20	1	1	100007492	HEX NUT NYLOCK - 1/2-13 UNC - GR5 - ZINC	100007492
21	1	1	100007391	NAME PLATE STEEL - BLANK	100007391
22	2	2	100003823	BOLT HEX 1/2-13 UNC 1.5 ZINC	100003823
23	4	4	100026256	LOW-STRENGTH STEEL FLANGE NUT, 1/2" - 13 THREAD SIZE	100026256

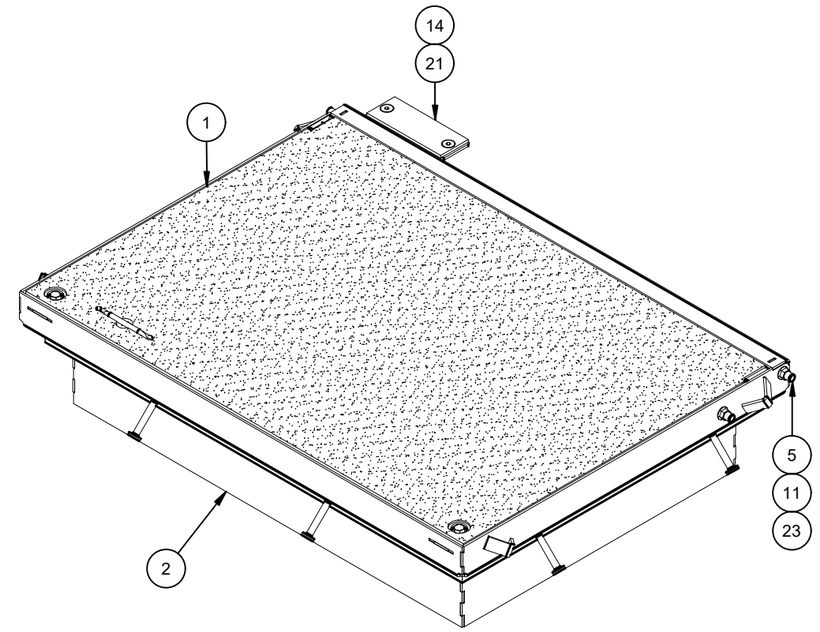

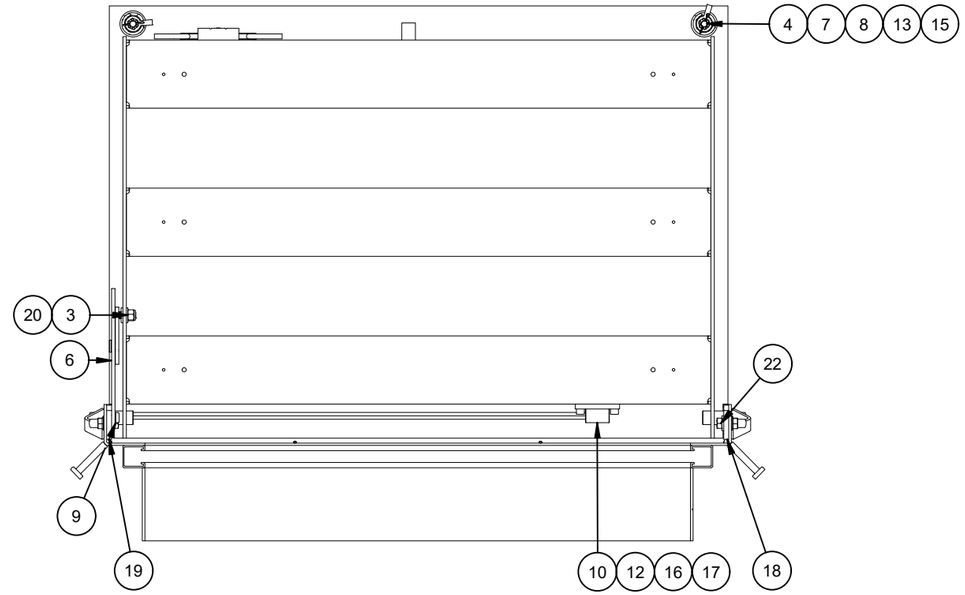

REVISION HISTORY		
DESCRIPTION	DATE	REVISED BY
SHORTENED STIFFENING MEMBERS FROM 2.81" TO 2.50". INCREASED FILLET LENGTH ON DOOR STIFFENERS FROM 3" TO 3.75". REPLACED WELDED FRAME PEM NUTS WITH BOLTED FLANGE NUTS	12/13/2022	
61555-2: CORRECTED TOP PLATE MATERIAL. CLEANED UP FRAME. UPDATED CATCH PLATES.	9/29/2026	C. HEYWOOD

MATERIAL FINISH: Galvanized

MATERIAL SURFACE: TraxPlate™

Infrastructure JENSEN

527 Dunn Circle, Sparks, NV 89431
775-352-2716 FAX: 755-358-8127
JENSENMETALTECH.COM

©2026 Jensen Infrastructure - All rights reserved.
All materials appearing as Jensen Infrastructure documents and the like are proprietary work product and are protected under U.S. copyright and other laws. Unless in conjunction with business conducted with Jensen Infrastructure , any use of Jensen Infrastructure work product without express, written consent is prohibited, and recipient is prohibited from distributing any and all work product to non-approved third parties under penalty of civil action.
This product shall only be produced in a Jensen Infrastructure facility.

PART NUMBER & DESCRIPTION:	200018753 CAS1-2840-CH5-TRX-G-CL-WR-OH10		REV: E-2-1
WEIGHT:	332.78 Lbs	DRAWN BY: C. Heywood	SHEET: 2
CREATED:	3/29/2019	MODIFIED: 9/30/2026	

200018753.idw

BURN LIST - BOM

PART NAME	ITEM QTY	QTY	DESCRIPTION	STOCK NUMBER	MATERIAL	MASS	SHEET
200050591	2	9.627 lbmass	Door Component Steel Side Bar	100007735	STL ASTM A36 SM-HRPO RAW .250	4.814 lbmass	07
200050592	1	126.599 lbmass	Door Component Steel Plate, Top	100007835	STL ASTM A36 SM-HRPO RAW .3125	126.599 lbmass	08
200050593	3	64.230 lbmass	Door Component Steel Channel	100007821	SHT STL GR80 SM-HRPO RAW .1875	21.410 lbmass	09
200050595	1	13.383 lbmass	Frame Component Steel Frame Front, Cast In	100007734	STL ASTM A36 SM-HRPO 60X120 RAW .1875	13.383 lbmass	10
200050596	1	16.962 lbmass	Frame Component Steel Frame End, Cast In	100007734	STL ASTM A36 SM-HRPO 60X120 RAW .1875	16.962 lbmass	11
200050597	1	9.735 lbmass	Frame Component Steel Frame Side, Cast In	100007734	STL ASTM A36 SM-HRPO 60X120 RAW .1875	9.735 lbmass	12
200050598	1	9.735 lbmass	Frame Component Steel Frame Side, Cast In	100007734	STL ASTM A36 SM-HRPO 60X120 RAW .1875	9.735 lbmass	13
200050599	2	16.072 lbmass	Frame Component Steel Skirt Extension	100007734	STL ASTM A36 SM-HRPO 60X120 RAW .1875	8.036 lbmass	14
200050600	2	22.945 lbmass	Frame Component Steel Skirt Extension	100007734	STL ASTM A36 SM-HRPO 60X120 RAW .1875	11.473 lbmass	15
200080040	2	0.214 lbmass	Frame Cam Latch Catch Plate - A36 - 0.60" Overhang	100007734	STL ASTM A36 SM-HRPO 60X120 RAW .1875	0.107 lbmass	18

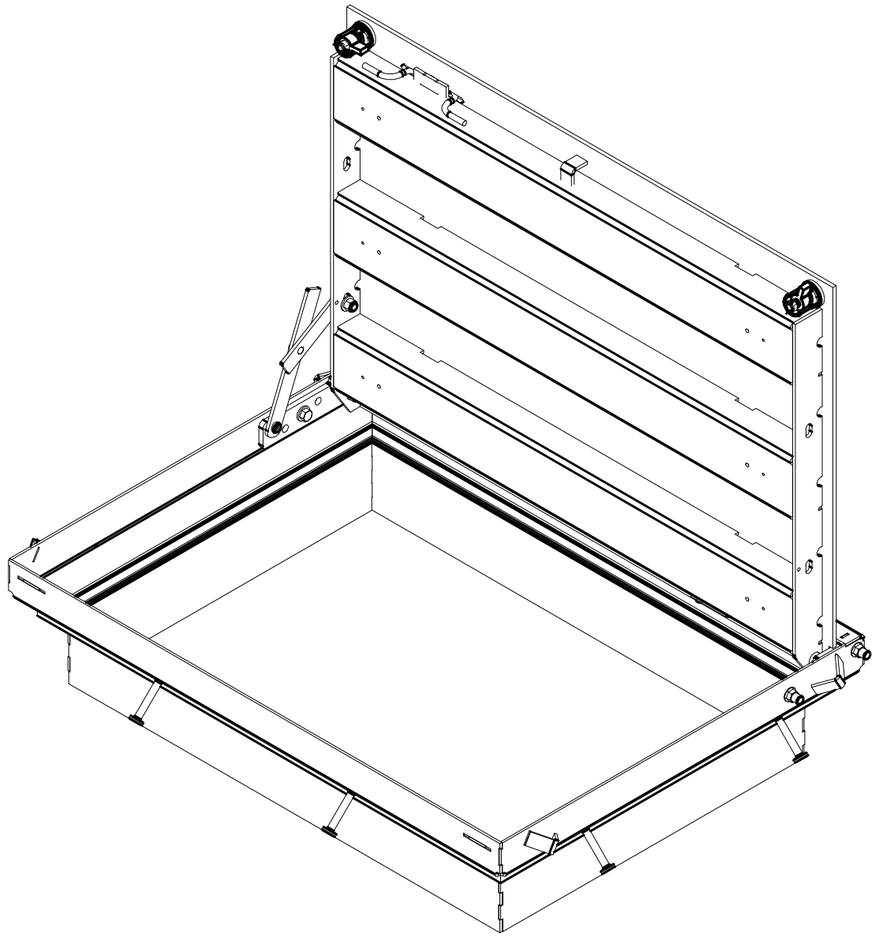

200018753.idw

MATERIAL FINISH: Galvanized

MATERIAL SURFACE: TraxPlate™

Infrastructure JENSEN
527 Dunn Circle, Sparks, NV 89431
775-352-2716 FAX: 755-358-8127
JENSENMETALTECH.COM

©2026 Jensen Infrastructure - All rights reserved.
All materials appearing as Jensen Infrastructure documents and the like are proprietary work product and are protected under U.S. copyright and other laws. Unless in conjunction with business conducted with Jensen Infrastructure , any use of Jensen Infrastructure work product without express, written consent is prohibited, and recipient is prohibited from distributing any and all work product to non-approved third parties under penalty of civil action.
This product shall only be produced in a Jensen Infrastructure facility.

PART NUMBER & DESCRIPTION: 200018753
CAS1-2840-CH5-TRX-G-CL-WR-OH10

REV: E-2-1

WEIGHT: 332.78 Lbs

DRAWN BY: C. Heywood

CREATED: 3/29/2019

MODIFIED: 9/30/2026

SHEET: 3

CUT LIST - BOM

PART NAME	ITEM QTY	BASE QTY	QTY	DESCRIPTION	PART NUMBER	MASS	SHEET
100007972	2	31.25 in	62.5000 in	STRUT C-CHANNEL 1-5/8 X 1-5/8 12GA SOLID RAW	100007972	5.1315 lbmass	
100007972	2	43.25 in	86.5000 in	STRUT C-CHANNEL 1-5/8 X 1-5/8 12GA SOLID RAW	100007972	7.1020 lbmass	

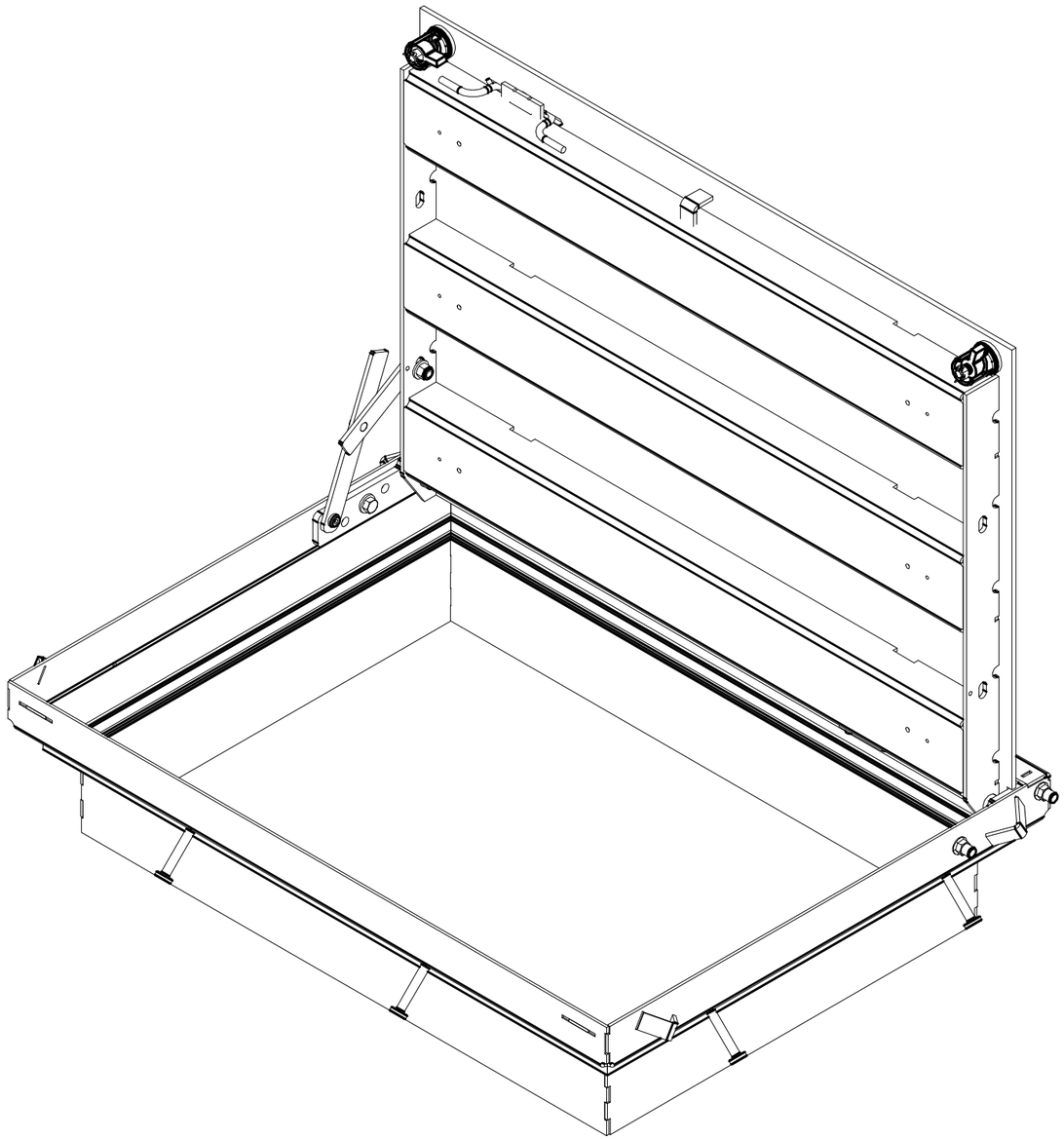

200018753.idw

MATERIAL FINISH:
Galvanized

MATERIAL SURFACE:
TraxPlate™

Infrastructure
JENSEN
527 Dunn Circle, Sparks, NV 89431
775-352-2716 FAX: 755-358-8127
JENSENMETALTECH.COM

©2026 Jensen Infrastructure - All rights reserved.
All materials appearing as Jensen Infrastructure documents and the like are proprietary work product and are protected under U.S. copyright and other laws. Unless in conjunction with business conducted with Jensen Infrastructure , any use of Jensen Infrastructure work product without express, written consent is prohibited, and recipient is prohibited from distributing any and all work product to non-approved third parties under penalty of civil action.
This product shall only be produced in a Jensen Infrastructure facility.

PART NUMBER & DESCRIPTION: 200018753
CAS1-2840-CH5-TRX-G-CL-WR-OH10

REV: E-2-1

WEIGHT: 332.78 Lbs

DRAWN BY: C. Heywood

CREATED: 3/29/2019

MODIFIED: 9/30/2026

SHEET: 4

BILL OF MATERIALS

ITEM	ITEM QTY	QTY	PART NUMBER	DESCRIPTION	PART NAME
1	1	126.599 lbmass	100007835	Door Component Steel Plate, Top	200050592
2	2	9.627 lbmass	100007735	Door Component Steel Side Bar	200050591
3	3	64.230 lbmass	100007821	Door Component Steel Channel	200050593
4	1	1	100007644	LEAF PULL HANDLE A36 3/8IN DIAMETER	100007644
5	1	1	100007647	LIFTING BRACKET STEEL LEAF	100007647
6	1	1	100007646	HANDLE RETAINER STL	100007646
7	2	2	100007970	CAM TOWER CAST STEEL	100007970

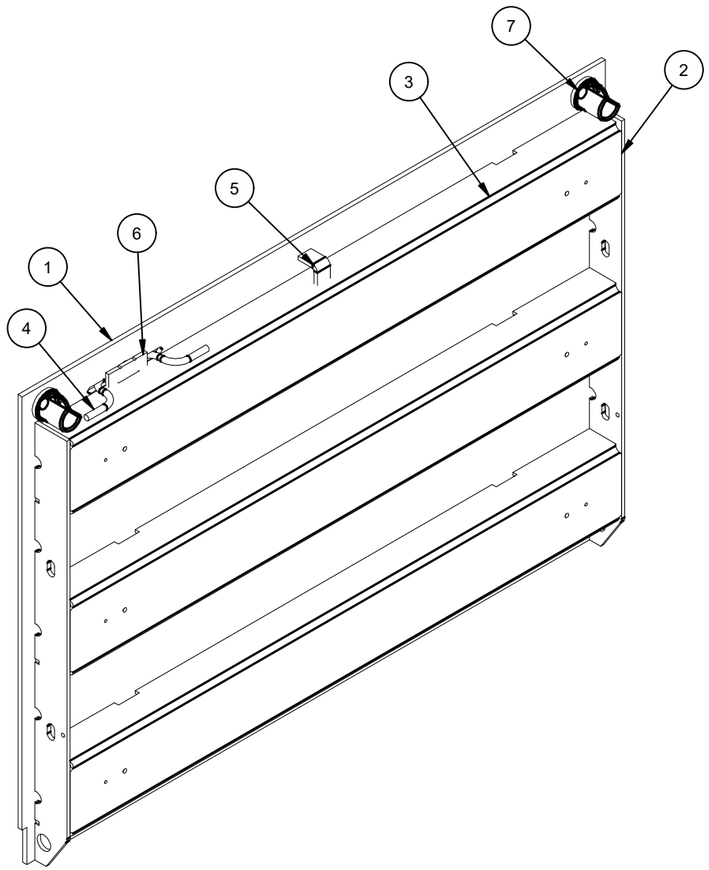

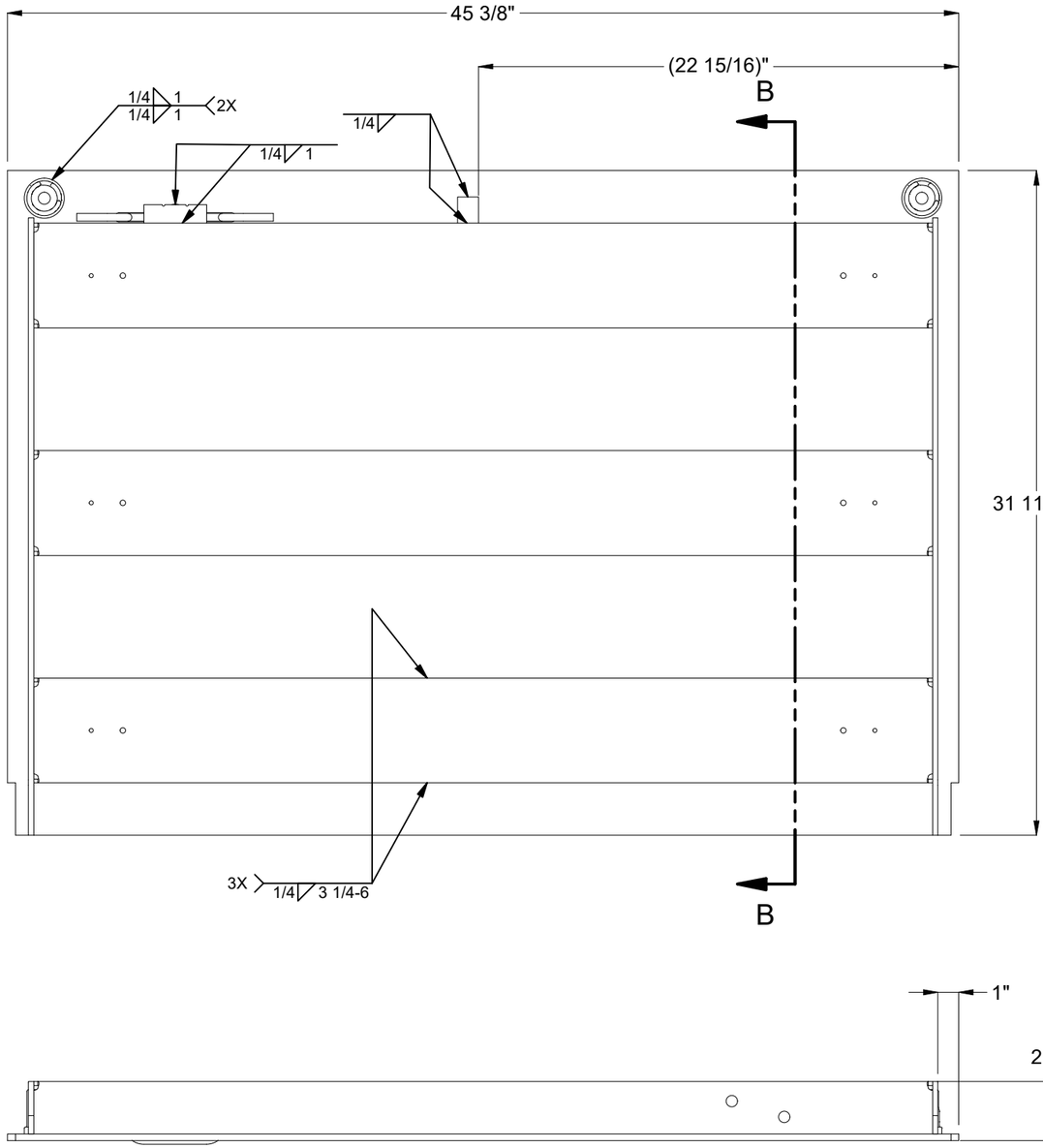

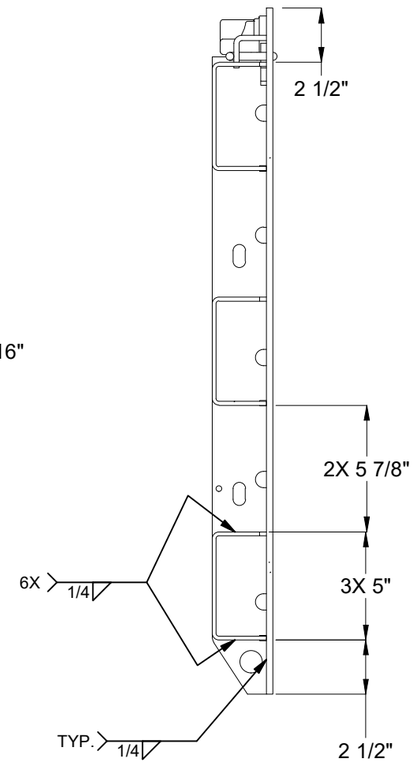

SECTION B-B

MATERIAL FINISH: Raw	Infrastructure JENSEN 527 Dunn Circle, Sparks, NV 89431 775-352-2716 FAX: 755-358-8127 *JENSENMETALTECH.COM*	©2026 Jensen Infrastructure - All rights reserved. All materials appearing as Jensen Infrastructure documents and the like are proprietary work product and are protected under U.S. copyright and other laws. Unless in conjunction with business conducted with Jensen Infrastructure , any use of Jensen Infrastructure work product without express, written consent is prohibited, and recipient is prohibited from distributing any and all work product to non-approved third parties under penalty of civil action. This product shall only be produced in a Jensen Infrastructure facility.	PART NUMBER & DESCRIPTION: 200050590 DAS1-SD-2840-H5-TRX-R / REV: E-2-1
MATERIAL SURFACE: TraxPlate™			WEIGHT: 202.21 Lbs / DRAWN BY: C. Heywood / SHEET: 5
			CREATED: 3/29/2019 / MODIFIED: 9/30/2026

200018753.idw

BILL OF MATERIALS

ITEM	ITEM QTY	QTY	PART NUMBER	DESCRIPTION	PART NAME
1	1	9.735 lbmass	100007734	Frame Component Steel Frame Side, Cast In	200050597
2	1	9.735 lbmass	100007734	Frame Component Steel Frame Side, Cast In	200050598
3	1	16.962 lbmass	100007734	Frame Component Steel Frame End, Cast In	200050596
4	1	13.383 lbmass	100007734	Frame Component Steel Frame Front, Cast In	200050595
5	2	16.072 lbmass	100007734	Frame Component Steel Skirt Extension	200050599
6	2	22.945 lbmass	100007734	Frame Component Steel Skirt Extension	200050600
7	2	2	200018691	FRAME BOLT DOUBLER SLOT	200018691
8	2	0.214 lbmass	100007734	Frame Cam Latch Catch Plate - A36 - 0.60" Overhang	200080040
9	4	4	100007641	FRAME LIFTING BRACKET	100007641
10	1	1	100007667	NAME PLATE FRAME ANGLE	100007667
11	8	8	100007886	STUD NELSON WELD H4L-HEADED A36 1/2X3-1/8	100007886
12	2	2	100007728	NUT SELF-CLINCH 1/2-13 S-0813-1 RAW	100007728
13	2	86.5000 in	100007972	STRUT C-CHANNEL 1-5/8 X 1-5/8 12GA SOLID RAW	100007972
14	2	62.5000 in	100007972	STRUT C-CHANNEL 1-5/8 X 1-5/8 12GA SOLID RAW	100007972

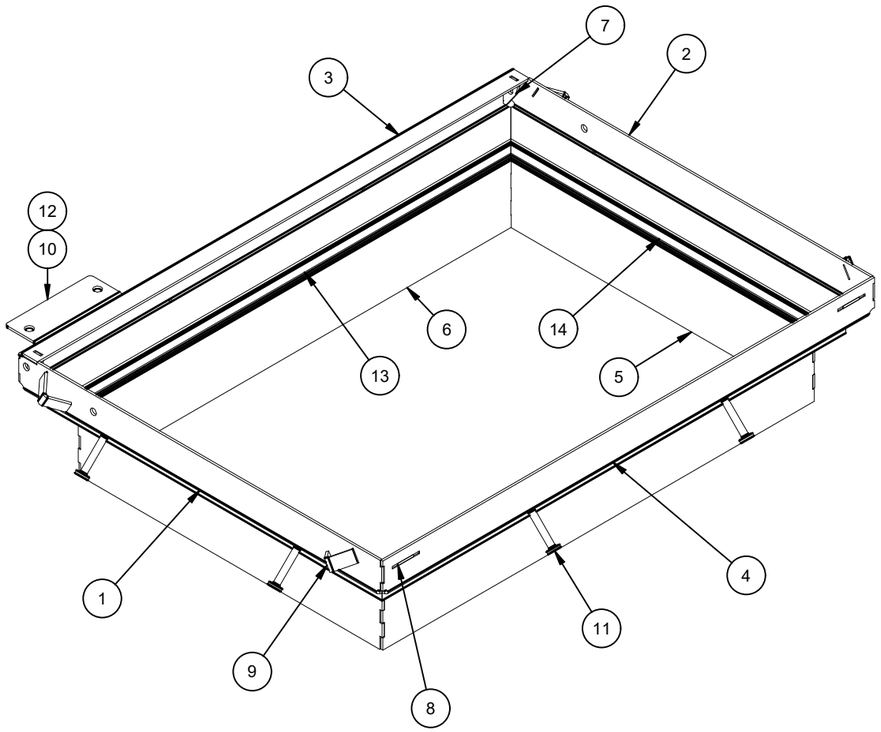

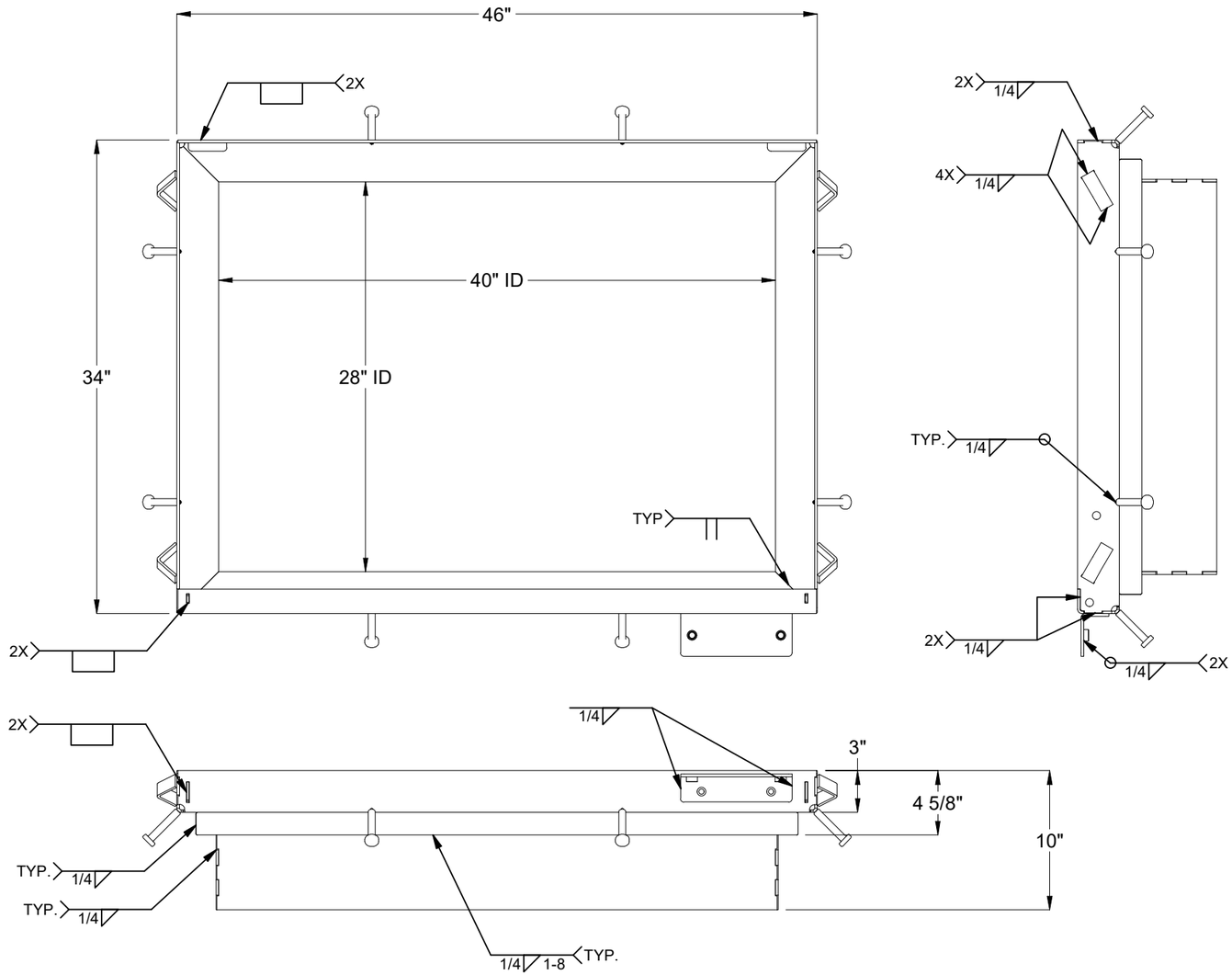

200018753.idw

MATERIAL FINISH: Raw	Infrastructure JENSEN 527 Dunn Circle, Sparks, NV 89431 775-352-2716 FAX: 755-358-8127 *JENSENMETALTECH.COM*	©2026 Jensen Infrastructure - All rights reserved. All materials appearing as Jensen Infrastructure documents and the like are proprietary work product and are protected under U.S. copyright and other laws. Unless in conjunction with business conducted with Jensen Infrastructure , any use of Jensen Infrastructure work product without express, written consent is prohibited, and recipient is prohibited from distributing any and all work product to non-approved third parties under penalty of civil action. This product shall only be produced in a Jensen Infrastructure facility.	PART NUMBER & DESCRIPTION: 200050594 FAS-2840-CH5-R-OH13 — REV: E-2-1
MATERIAL SURFACE: Smooth			WEIGHT: 117.23 Lbs — DRAWN BY: C. Heywood — SHEET: 6
			CREATED: 3/29/2019 — MODIFIED: 9/30/2026

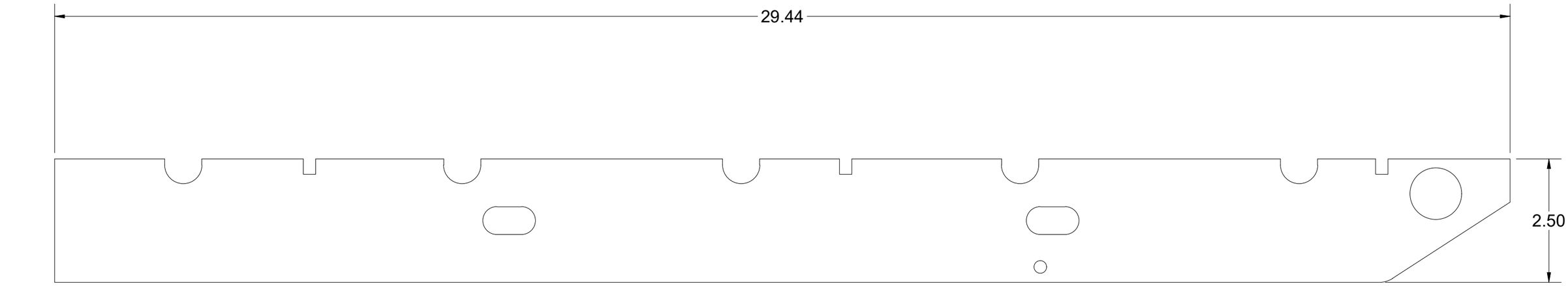

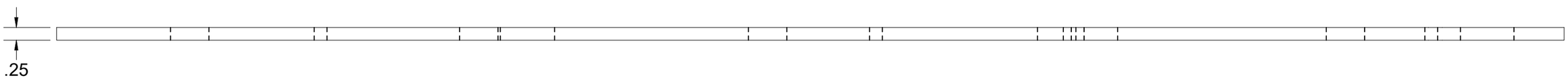

BEND TABLE				MATERIAL IFS: 100007735
BEND RADIUS	V-OPENING	BEND ANGLE	BEND DEDUCTION	MATERIAL THK: 0.25
-	-	- 0	-	MAT DESCRIPTION: STL ASTM A36 SM-HRPO RAW .250

Infrastructure
JENSEN
527 Dunn Circle, Sparks, NV 89431
775-352-2716 FAX: 755-358-8127
JENSENMETALTECH.COM

©2026 Jensen Infrastructure - All rights reserved.
All materials appearing as Jensen Infrastructure documents and the like are proprietary work product and are protected under U.S. copyright and other laws. Unless in conjunction with business conducted with Jensen Infrastructure , any use of Jensen Infrastructure work product without express, written consent is prohibited, and recipient is prohibited from distributing any and all work product to non-approved third parties under penalty of civil action.
This product shall only be produced in a Jensen Infrastructure facility.

NAME & DESCRIPTION: 200050591 Door Component Steel Side Bar		REV: E-2-1
WEIGHT: 4.814 lbmass	DRAWN BY: C. Heywood	SHEET: 7 OF 18
CREATED: 3/29/2019	MODIFIED: 9/30/2026	

200018753.idw

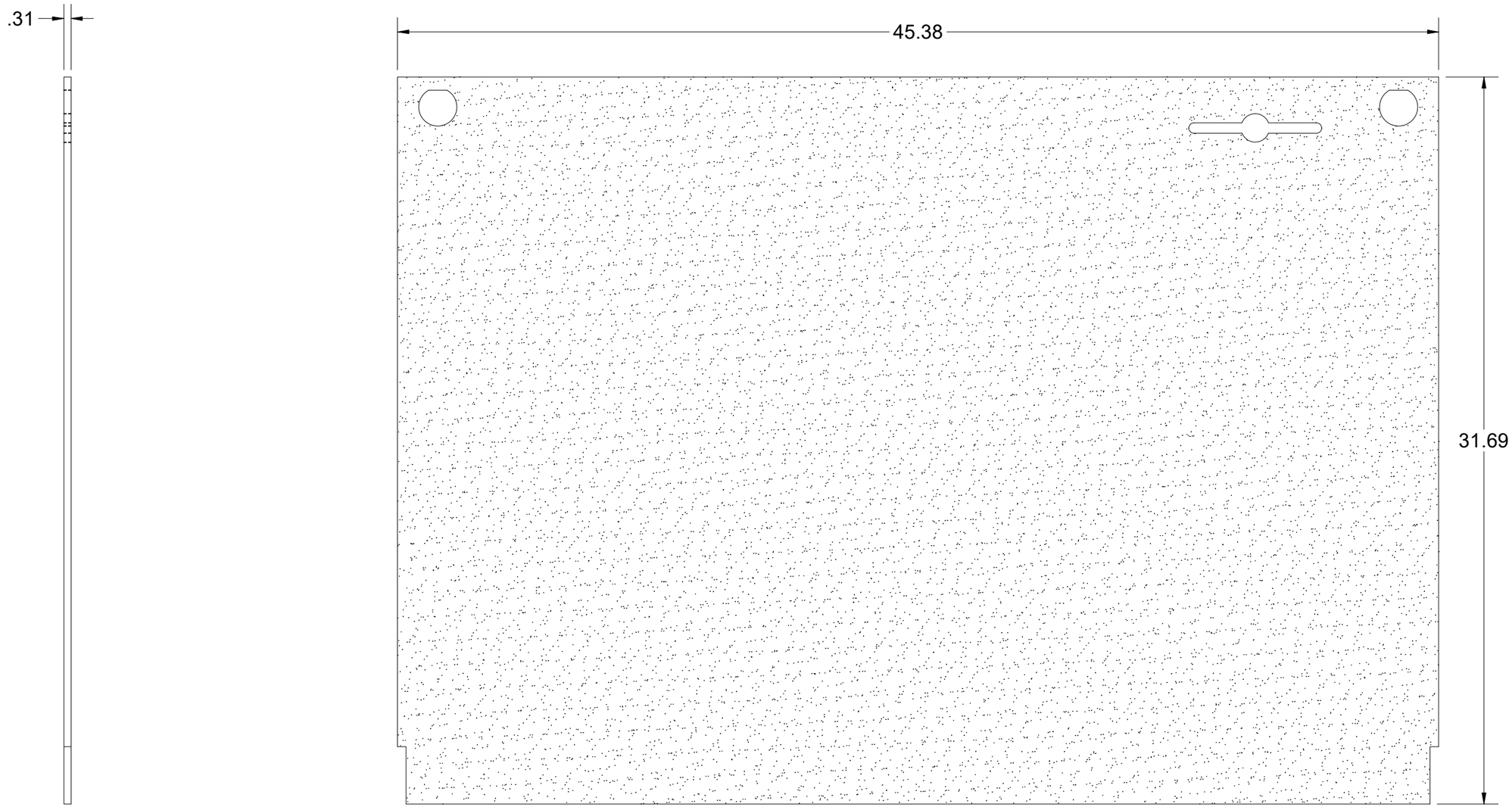

20001875 3.idw

BEND TABLE				MATERIAL IFS: 100007835			
BEND RADIUS	V-OPENING	BEND ANGLE	BEND DEDUCTION	MATERIAL THK: 0.3125			
-	-	- 0	-	MAT DESCRIPTION: STL ASTM A36 SM-HRPO RAW .3125			

Infrastructure
JENSEN
527 Dunn Circle, Sparks, NV 89431
775-352-2716 FAX: 755-358-8127
JENSENMETALTECH.COM

©2026 Jensen Infrastructure - All rights reserved.
All materials appearing as Jensen Infrastructure documents and the like are proprietary work product and are protected under U.S. copyright and other laws. Unless in conjunction with business conducted with Jensen Infrastructure , any use of Jensen Infrastructure work product without express, written consent is prohibited, and recipient is prohibited from distributing any and all work product to non-approved third parties under penalty of civil action.
This product shall only be produced in a Jensen Infrastructure facility.

NAME & DESCRIPTION: 200050592 Door Component Steel Plate, Top		REV: E-2-1
WEIGHT: 126.599 lbmass	DRAWN BY: C. Heywood	SHEET: 8 OF 18
CREATED: 3/29/2019	MODIFIED: 9/30/2026	

NON-SYMMETRIC

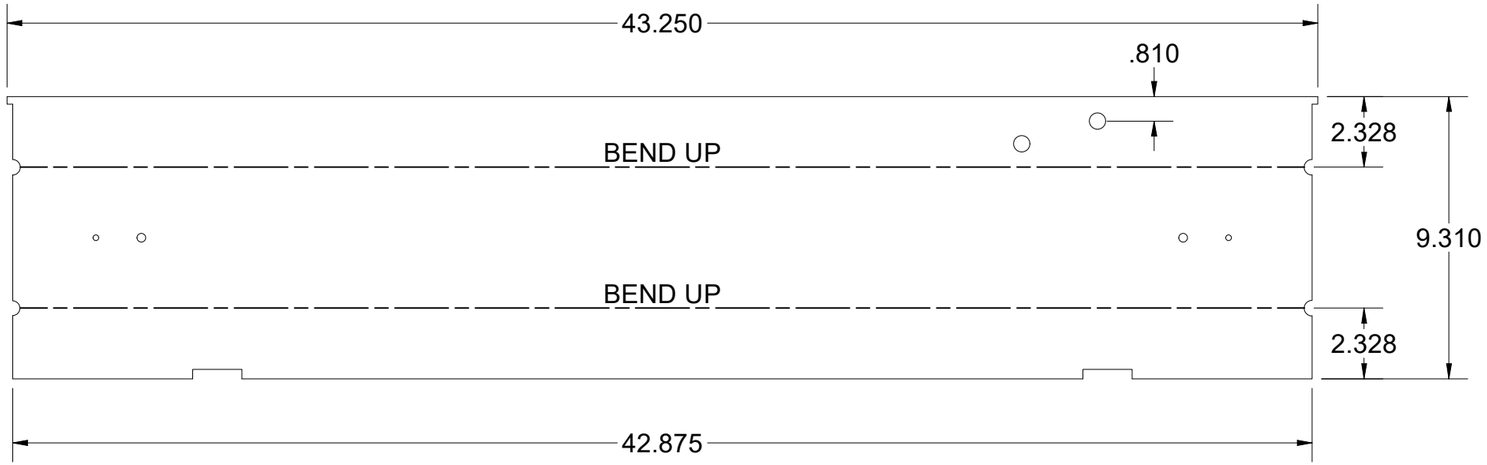

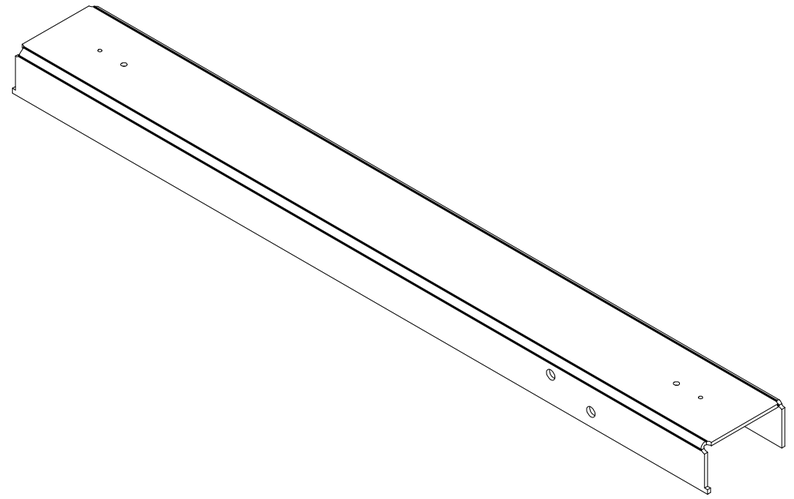



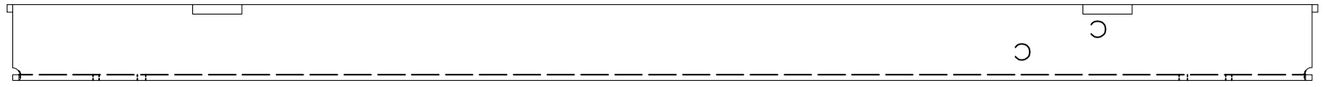

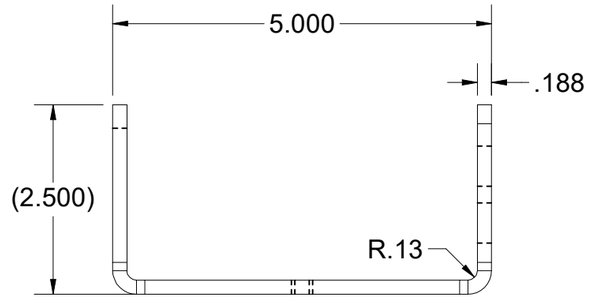

BEND TABLE			
BEND RADIUS	V-OPENING	BEND ANGLE	BEND DEDUCTION
0.125	2	90	0.345

MATERIAL IFS: 100007821

MATERIAL THK: 0.1875

MAT DESCRIPTION: SHT STL GR80 SM-HRPO RAW .1875

Infrastructure JENSEN

527 Dunn Circle, Sparks, NV 89431
775-352-2716 FAX: 755-358-8127
JENSENMETALTECH.COM

©2026 Jensen Infrastructure - All rights reserved. All materials appearing as Jensen Infrastructure documents and the like are proprietary work product and are protected under U.S. copyright and other laws. Unless in conjunction with business conducted with Jensen Infrastructure , any use of Jensen Infrastructure work product without express, written consent is prohibited, and recipient is prohibited from distributing any and all work product to non-approved third parties under penalty of civil action. This product shall only be produced in a Jensen Infrastructure facility.

NAME & DESCRIPTION: 200050593 Door Component Steel Channel

REV: E-2-1

WEIGHT: 21.410 lbmass

DRAWN BY: C. Heywood

CREATED: 3/29/2019

MODIFIED: 9/30/2026

SHEET: 9 OF 18

200018753.idw

SYMMETRIC

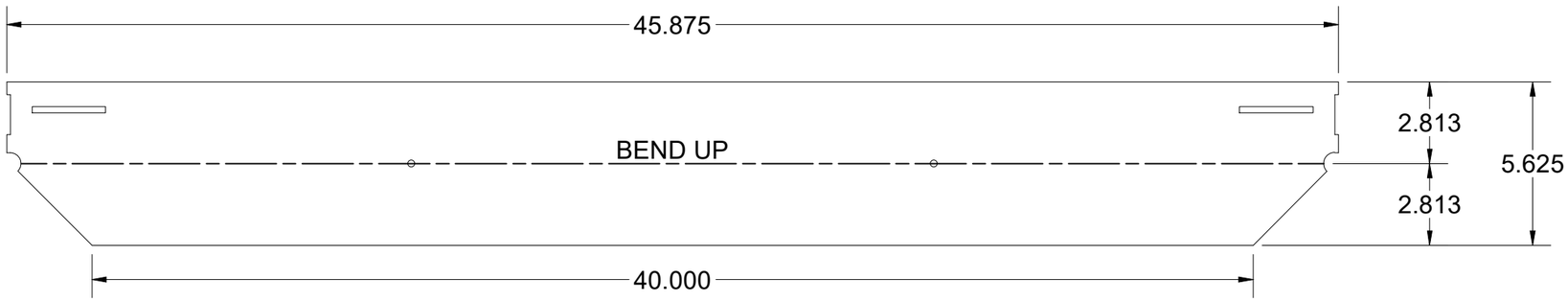

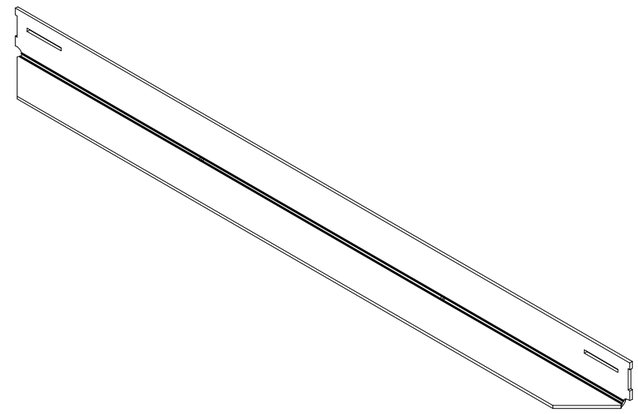



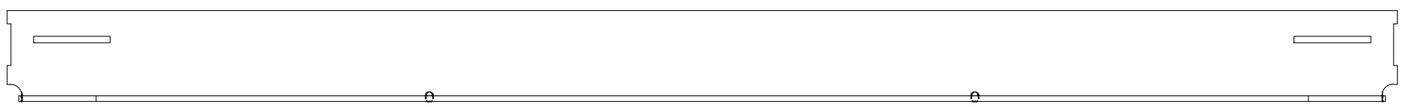

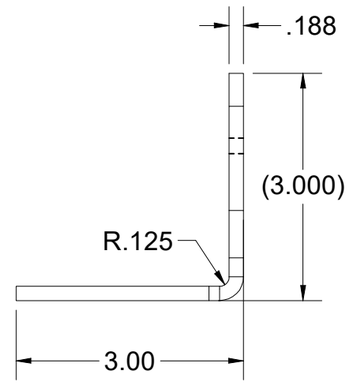

BEND TABLE				MATERIAL IFS: 100007734
BEND RADIUS	V-OPENING	BEND ANGLE	BEND DEDUCTION	MATERIAL THK: 0.1875
0.125	2	90	0.375	MAT DESCRIPTION: STL ASTM A36 SM-HRPO 60X120 RAW .1875

Infrastructure JENSEN
527 Dunn Circle, Sparks, NV 89431
775-352-2716 FAX: 755-358-8127
JENSENMETALTECH.COM

©2026 Jensen Infrastructure - All rights reserved.
All materials appearing as Jensen Infrastructure documents and the like are proprietary work product and are protected under U.S. copyright and other laws. Unless in conjunction with business conducted with Jensen Infrastructure , any use of Jensen Infrastructure work product without express, written consent is prohibited, and recipient is prohibited from distributing any and all work product to non-approved third parties under penalty of civil action.
This product shall only be produced in a Jensen Infrastructure facility.

NAME & DESCRIPTION: 200050595 Frame Component Steel Frame Front, Cast In		REV: E-2-1
WEIGHT: 13.383 lbmass	DRAWN BY: C. Heywood	SHEET: 10 OF 18
CREATED: 3/29/2019	MODIFIED: 9/30/2026	

200018753.idw

NON-SYMMETRIC

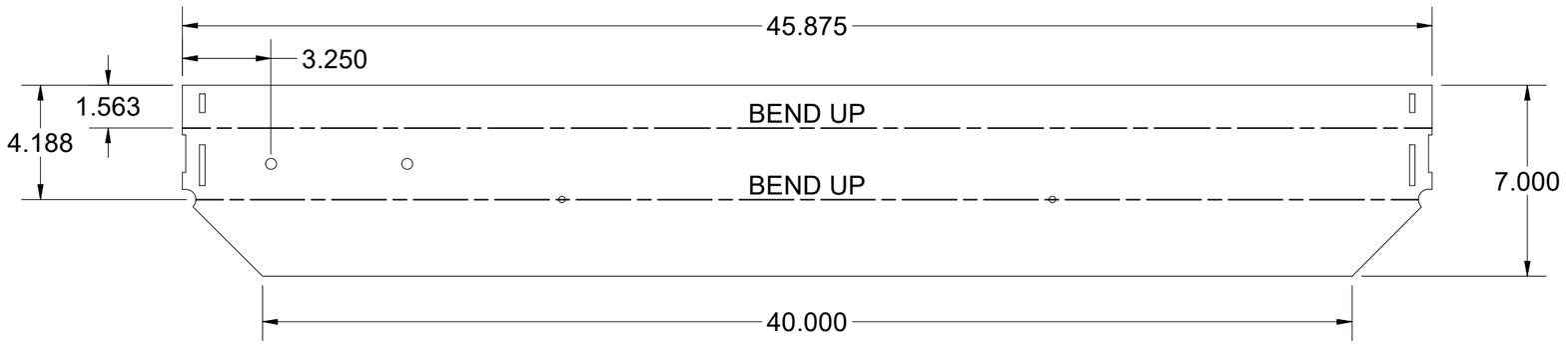

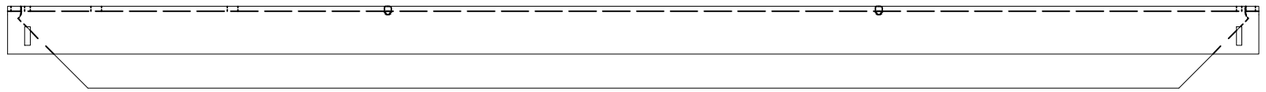



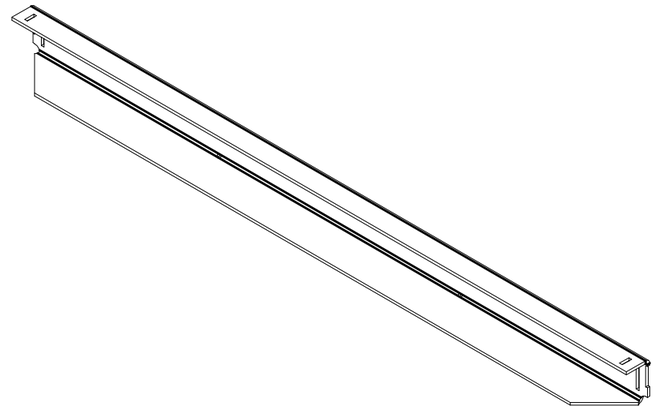

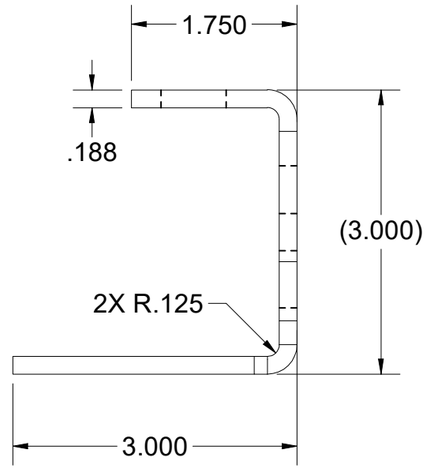

BEND TABLE				MATERIAL IFS: 100007734
BEND RADIUS	V-OPENING	BEND ANGLE	BEND DEDUCTION	MATERIAL THK: 0.1875
0.125	2	90	0.375	MAT DESCRIPTION: STL ASTM A36 SM-HRPO 60X120 RAW .1875

Infrastructure JENSEN

527 Dunn Circle, Sparks, NV 89431
775-352-2716 FAX: 755-358-8127
JENSENMETALTECH.COM

©2026 Jensen Infrastructure - All rights reserved.
All materials appearing as Jensen Infrastructure documents and the like are proprietary work product and are protected under U.S. copyright and other laws. Unless in conjunction with business conducted with Jensen Infrastructure , any use of Jensen Infrastructure work product without express, written consent is prohibited, and recipient is prohibited from distributing any and all work product to non-approved third parties under penalty of civil action.
This product shall only be produced in a Jensen Infrastructure facility.

NAME & DESCRIPTION: 200050596 Frame Component Steel Frame End, Cast In		REV: E-2-1
WEIGHT: 16.962 lbmass	DRAWN BY: C. Heywood	SHEET: 11 OF 18
CREATED: 3/29/2019	MODIFIED: 9/30/2026	

NON-SYMMETRIC

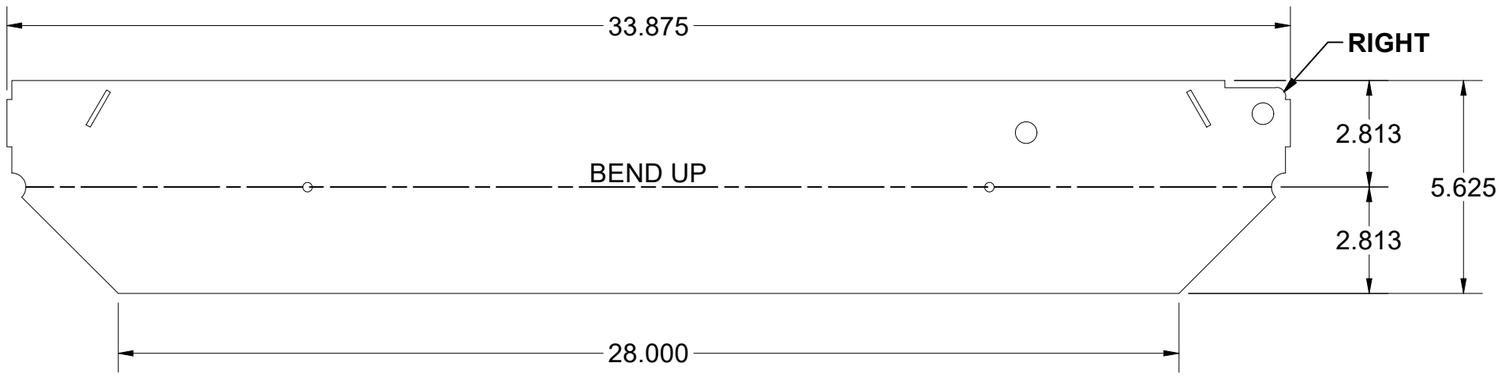

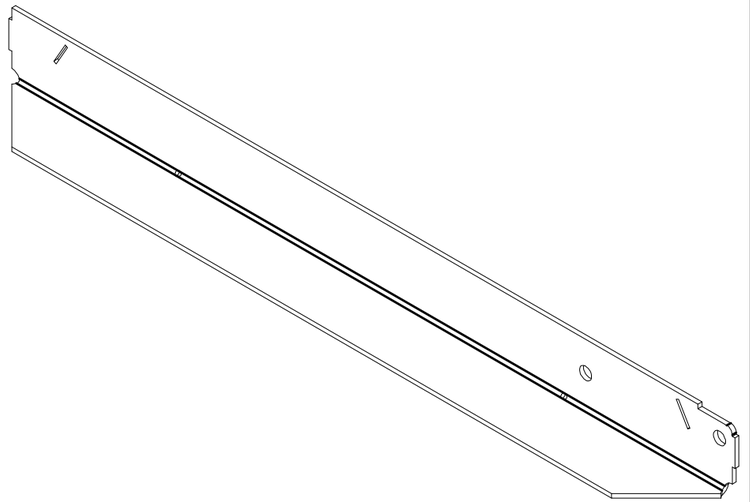

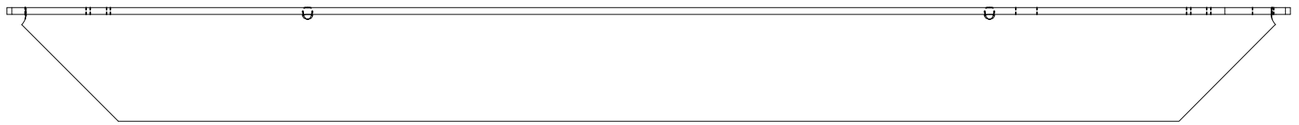

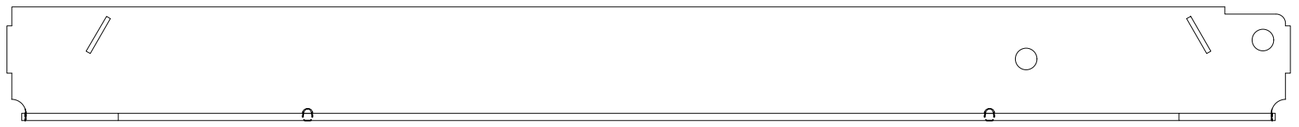

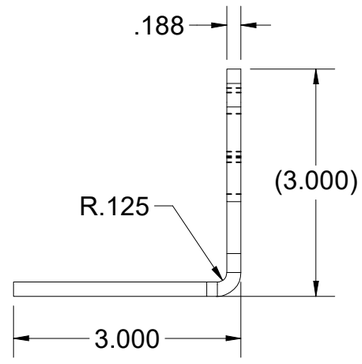

BEND TABLE				MATERIAL IFS: 100007734
BEND RADIUS	V-OPENING	BEND ANGLE	BEND DEDUCTION	MATERIAL THK: 0.1875
0.125	2	90	0.375	MAT DESCRIPTION: STL ASTM A36 SM-HRPO 60X120 RAW .1875

Infrastructure JENSEN

527 Dunn Circle, Sparks, NV 89431
775-352-2716 FAX: 755-358-8127
JENSENMETALTECH.COM

©2026 Jensen Infrastructure - All rights reserved.
All materials appearing as Jensen Infrastructure documents and the like are proprietary work product and are protected under U.S. copyright and other laws. Unless in conjunction with business conducted with Jensen Infrastructure , any use of Jensen Infrastructure work product without express, written consent is prohibited, and recipient is prohibited from distributing any and all work product to non-approved third parties under penalty of civil action.
This product shall only be produced in a Jensen Infrastructure facility.

NAME & DESCRIPTION:		REV:
200050597 Frame Component Steel Frame Side, Cast In		E-2-1
WEIGHT: 9.735 lbmass	DRAWN BY: C. Heywood	SHEET: 12 OF 18
CREATED: 3/29/2019	MODIFIED: 9/30/2026	

200018753.idw

NON-SYMMETRIC

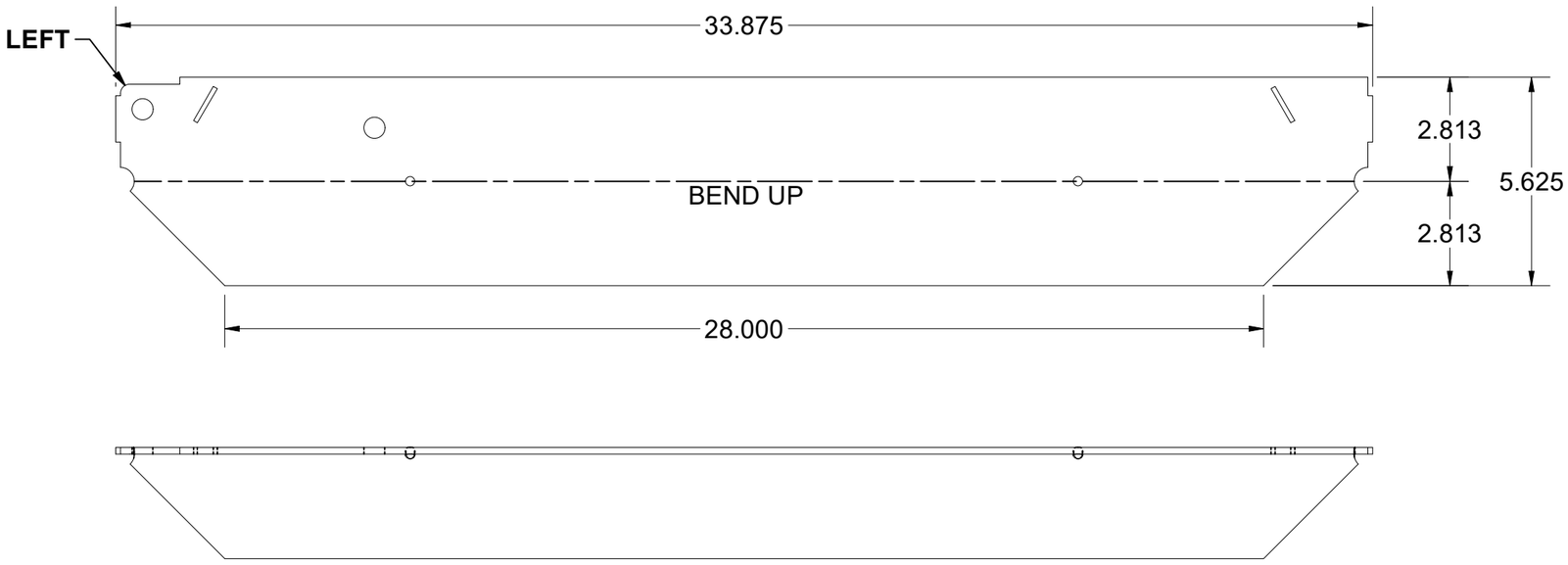

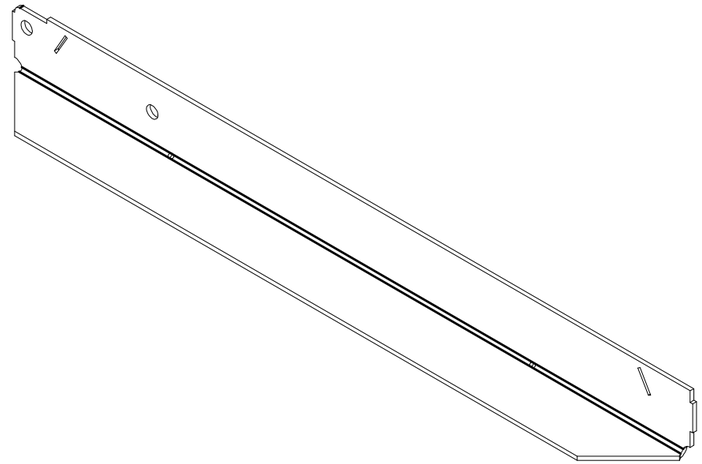

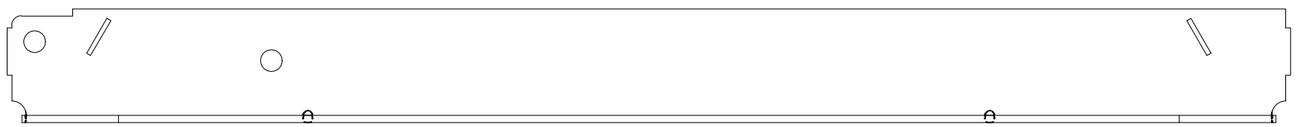

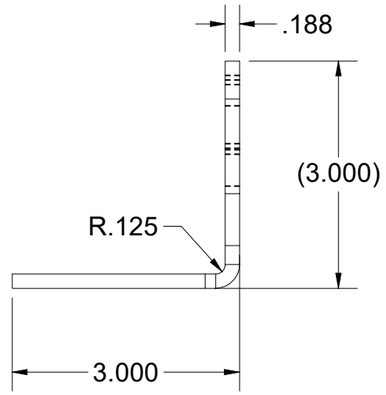

BEND TABLE				MATERIAL IFS: 100007734
BEND RADIUS	V-OPENING	BEND ANGLE	BEND DEDUCTION	MATERIAL THK: 0.1875
0.125	2	90	0.375	MAT DESCRIPTION: STL ASTM A36 SM-HRPO 60X120 RAW .1875

Infrastructure JENSEN

527 Dunn Circle, Sparks, NV 89431
775-352-2716 FAX: 755-358-8127
JENSENMETALTECH.COM

©2026 Jensen Infrastructure - All rights reserved. All materials appearing as Jensen Infrastructure documents and the like are proprietary work product and are protected under U.S. copyright and other laws. Unless in conjunction with business conducted with Jensen Infrastructure , any use of Jensen Infrastructure work product without express, written consent is prohibited, and recipient is prohibited from distributing any and all work product to non-approved third parties under penalty of civil action. This product shall only be produced in a Jensen Infrastructure facility.

NAME & DESCRIPTION:	200050598 Frame Component Steel Frame Side, Cast In		REV:
WEIGHT: 9.735 lbmass		DRAWN BY: C. Heywood	SHEET: 13 OF 18
CREATED: 3/29/2019		MODIFIED: 9/30/2026	

200018753.idw





BEND TABLE			
BEND RADIUS	V-OPENING	BEND ANGLE	BEND DEDUCTION
-	-	- 0	-

MATERIAL IFS: 100007734

MATERIAL THK: 0.1875

MAT DESCRIPTION: STL ASTM A36 SM-HRPO 60X120 RAW .1875

Infrastructure
JENSEN
527 Dunn Circle, Sparks, NV 89431
775-352-2716 FAX: 755-358-8127
JENSENMETALTECH.COM

©2026 Jensen Infrastructure - All rights reserved.
All materials appearing as Jensen Infrastructure documents and the like are proprietary work product and are protected under U.S. copyright and other laws. Unless in conjunction with business conducted with Jensen Infrastructure , any use of Jensen Infrastructure work product without express, written consent is prohibited, and recipient is prohibited from distributing any and all work product to non-approved third parties under penalty of civil action.
This product shall only be produced in a Jensen Infrastructure facility.

NAME & DESCRIPTION: 200050599
Frame Component Steel Skirt Extension

REV: E-2-1

WEIGHT: 8.036 lbmass

DRAWN BY: C. Heywood

CREATED: 3/29/2019

MODIFIED: 9/30/2026

SHEET: 14 OF 18

200018753.idw

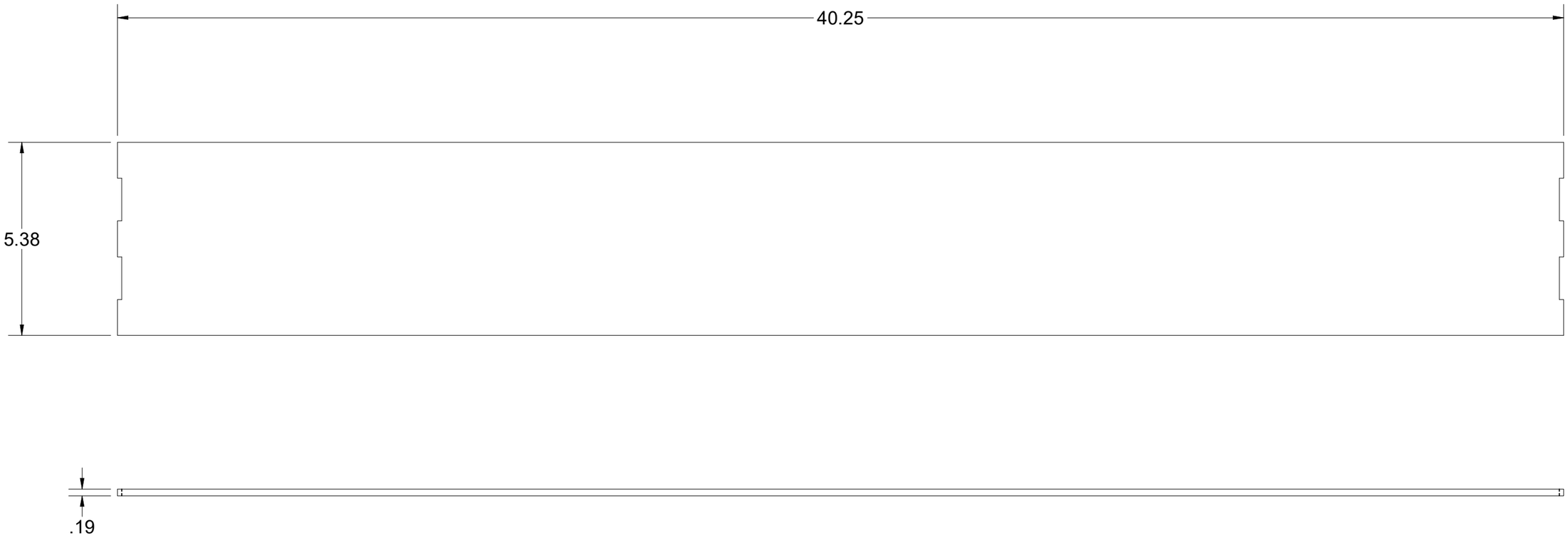

BEND TABLE				MATERIAL IFS: 100007734
BEND RADIUS	V-OPENING	BEND ANGLE	BEND DEDUCTION	MATERIAL THK: 0.1875
-	-	- 0	-	MAT DESCRIPTION: STL ASTM A36 SM-HRPO 60X120 RAW .1875

Infrastructure
JENSEN
527 Dunn Circle, Sparks, NV 89431
775-352-2716 FAX: 755-358-8127
JENSENMETALTECH.COM

©2026 Jensen Infrastructure - All rights reserved.
All materials appearing as Jensen Infrastructure documents and the like are proprietary work product and are protected under U.S. copyright and other laws. Unless in conjunction with business conducted with Jensen Infrastructure , any use of Jensen Infrastructure work product without express, written consent is prohibited, and recipient is prohibited from distributing any and all work product to non-approved third parties under penalty of civil action.
This product shall only be produced in a Jensen Infrastructure facility.

NAME & DESCRIPTION: 200050600 Frame Component Steel Skirt Extension		REV: E-2-1
WEIGHT: 11.473 lbmass	DRAWN BY: C. Heywood	SHEET: 15 OF 18
CREATED: 3/29/2019	MODIFIED: 9/30/2026	

200018753.idw

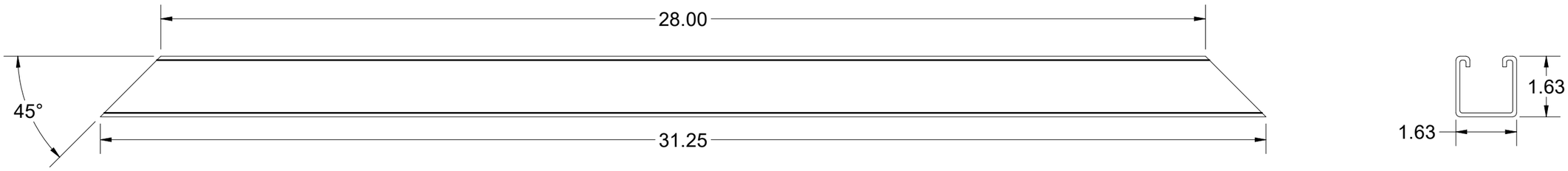

BEND TABLE				MATERIAL IFS:			
BEND RADIUS	V-OPENING	BEND ANGLE	BEND DEDUCTION	MATERIAL THK:			
				MAT DESCRIPTION:			

Infrastructure
JENSEN
527 Dunn Circle, Sparks, NV 89431
775-352-2716 FAX: 755-358-8127
JENSENMETALTECH.COM

©2026 Jensen Infrastructure - All rights reserved.
All materials appearing as Jensen Infrastructure documents and the like are proprietary work product and are protected under U.S. copyright and other laws. Unless in conjunction with business conducted with Jensen Infrastructure , any use of Jensen Infrastructure work product without express, written consent is prohibited, and recipient is prohibited from distributing any and all work product to non-approved third parties under penalty of civil action.
This product shall only be produced in a Jensen Infrastructure facility.

NAME & DESCRIPTION:	200050601 Frame Component Steel Unistrut		REV:
WEIGHT:	4.893 lbmass	DRAWN BY: C. Heywood	SHEET: 16 OF 18
CREATED:	3/29/2019	MODIFIED: 9/30/2026	

200018753.idw

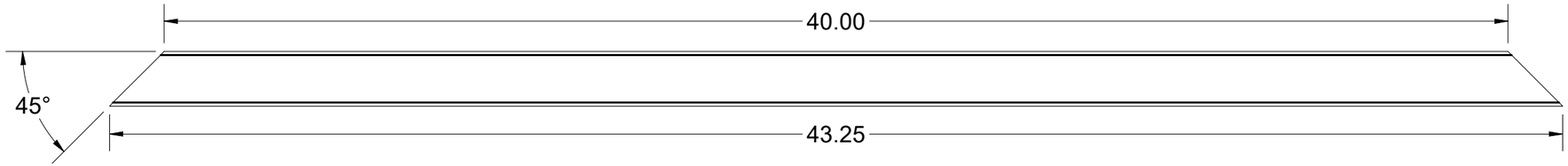

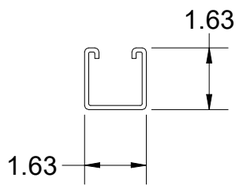

BEND TABLE				MATERIAL IFS:			
BEND RADIUS	V-OPENING	BEND ANGLE	BEND DEDUCTION	MATERIAL THK:			
				MAT DESCRIPTION:			

Infrastructure
JENSEN
527 Dunn Circle, Sparks, NV 89431
775-352-2716 FAX: 755-358-8127
JENSENMETALTECH.COM

©2026 Jensen Infrastructure - All rights reserved.
All materials appearing as Jensen Infrastructure documents and the like are proprietary work product and are protected under U.S. copyright and other laws. Unless in conjunction with business conducted with Jensen Infrastructure , any use of Jensen Infrastructure work product without express, written consent is prohibited, and recipient is prohibited from distributing any and all work product to non-approved third parties under penalty of civil action.
This product shall only be produced in a Jensen Infrastructure facility.

NAME & DESCRIPTION:	200050602 Frame Component Steel Unistrut	REV:	E-2-1
WEIGHT:	6.864 lbmass	DRAWN BY:	C. Heywood
CREATED:	3/29/2019	MODIFIED:	9/30/2026
		SHEET:	17 OF 18

200018753.idw

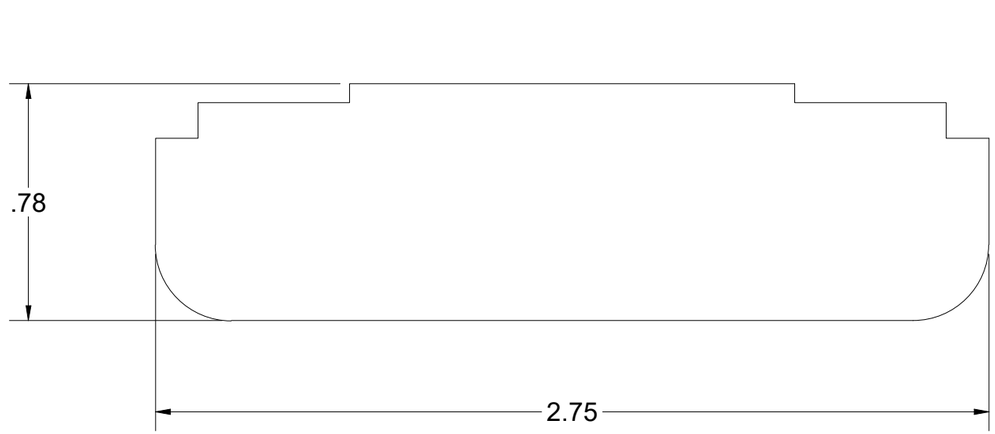

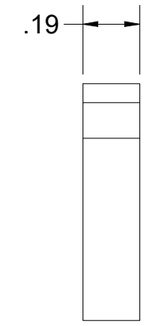

BEND TABLE				MATERIAL IFS: 100007734				
BEND RADIUS	V-OPENING	BEND ANGLE	BEND DEDUCTION	MATERIAL THK: 0.1875				
-	-	- 0	-	MAT DESCRIPTION: STL ASTM A36 SM-HRPO 60X120 RAW .1875				

Infrastructure JENSEN
527 Dunn Circle, Sparks, NV 89431
775-352-2716 FAX: 755-358-8127
JENSENMETALTECH.COM

©2026 Jensen Infrastructure - All rights reserved.
All materials appearing as Jensen Infrastructure documents and the like are proprietary work product and are protected under U.S. copyright and other laws. Unless in conjunction with business conducted with Jensen Infrastructure , any use of Jensen Infrastructure work product without express, written consent is prohibited, and recipient is prohibited from distributing any and all work product to non-approved third parties under penalty of civil action.
This product shall only be produced in a Jensen Infrastructure facility.

NAME & DESCRIPTION: 200080040 Frame Cam Latch Catch Plate - A36 - 0.60" Overhang		REV: E-2-1
WEIGHT: 0.107 lbmass	DRAWN BY: C. Heywood	SHEET: 18 OF 18
CREATED: 3/29/2019	MODIFIED: 9/30/2026	

200018753.idw