BILL OF MATERIALS

ITEM	QTY	PART NUMBER	DESCRIPTION
1	1	100009976	PIPE FITTING PVC SDR35 SAN TEE 4DIA
2	13.000 in	100002510	PIPE PVC 4IN DIA SDR35 ASTM D-3034 SOLVENT WELD SEWER DRAIN

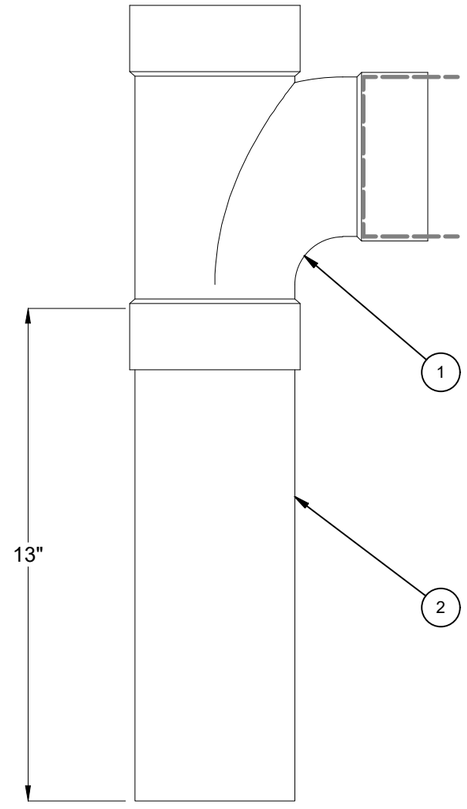

ELEVATION VIEW

200018630.idw

BURY DEPTH:	to		
WATER LEVEL:	WEIGHT:	2.04 Lbs	
DESIGN SPEC:	LOADING SPEC:		
AGENCY:	AGENCY SPEC:		

JENSEN PRECAST EST. 1968

WWW.JENSENPRECAST.COM

©2019 Jensen Precast- All rights reserved.
All materials appearing as Jensen Precast documents and the like are proprietary work product and are protected under U.S. copyright and other laws.
Unless in conjunction with business conducted with Jensen Precast, any use of Jensen Precast work product without express, written consent is prohibited, and recipient is prohibited from distributing any and all work product to non-approved third parties under penalty of civil action.

DESCRIPTION: JS 3000 4" PLUMBING ASSEMBLY SEPTIC OUTLET PLUMBING LAYOUT			REV: B-1
PART NUMBER:	200018630	DRAWN BY: E. Fine	SHEET: 1 OF 1
CREATED:	2/19/2019	MODIFIED: 8/2/2022	