BILL OF MATERIALS

ITEM	UNIT QTY	QTY	PART NUMBER	DESCRIPTION	PART NAME
2	72.575 lbmass	72.575 lbmass	100007736	Door Component Steel Plate, Top	200018203
4	11.083 lbmass	33.248 lbmass	100007735	Door Component Steel Perimeter Rail	200018204
3	6.243 lbmass	12.486 lbmass	100007735	Door Component Steel Perimeter Rail	200018205
1	1	1	200018206	PICK HOLE ANGLE	200018206

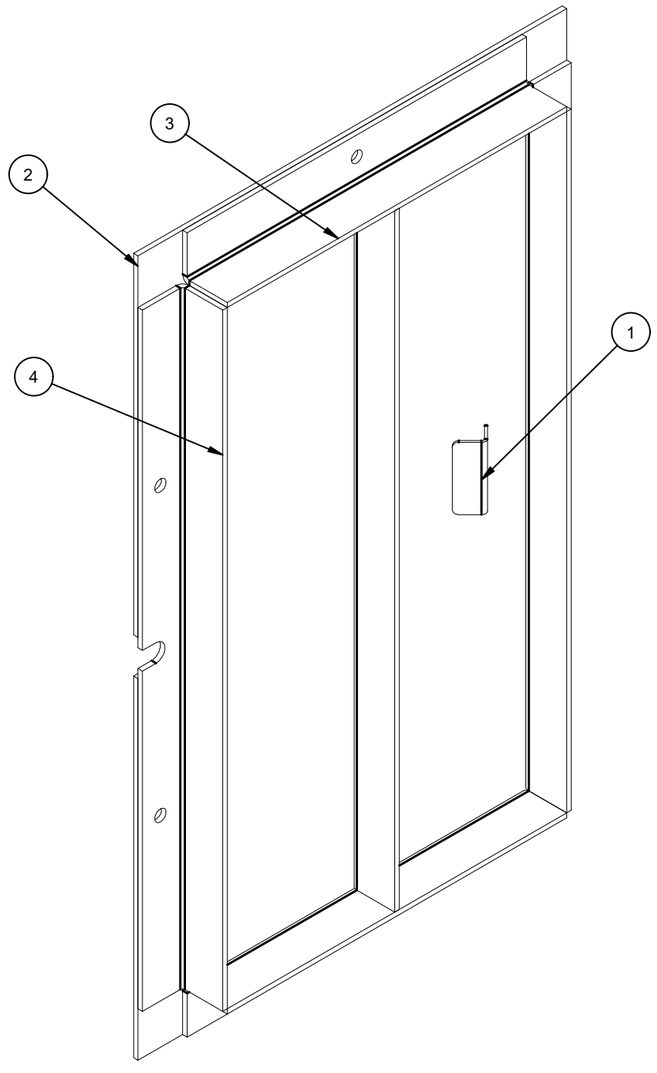

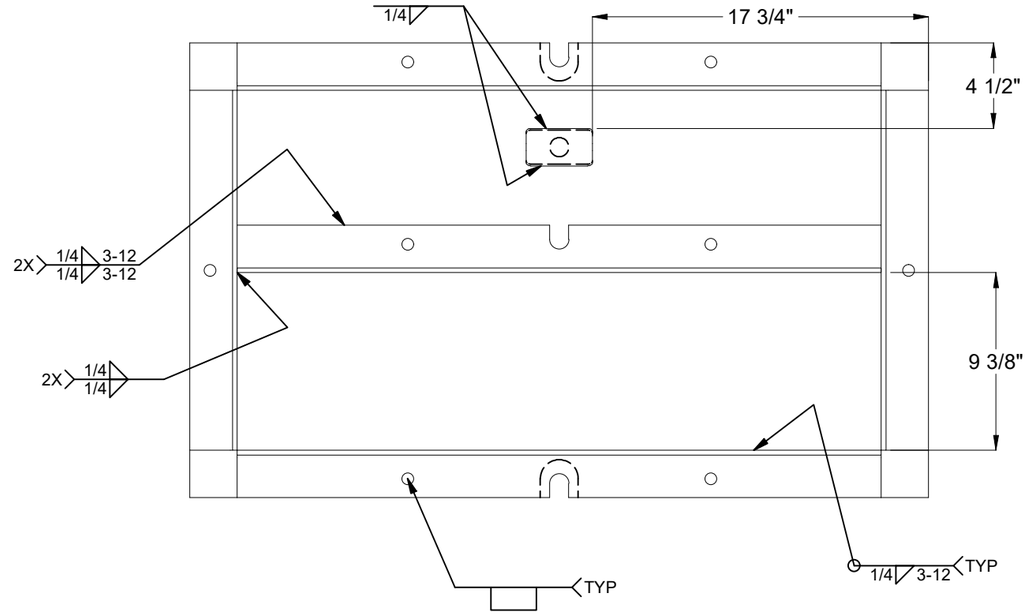

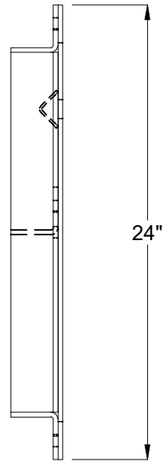

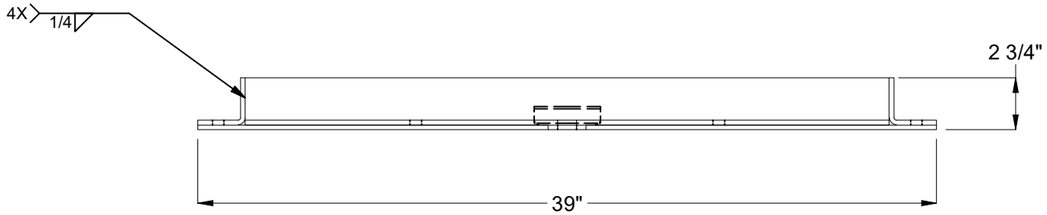

200018202.idw

REVISION HISTORY	
DESCRIPTION	DATE
ECR 57291-1 REMOVED PICK HOLE ANGLE ROM PRINT PACK. FIXED PICK HOLE ANGLE ORIENTATION.	7/24/24

MATERIAL FINISH: Galvanized

MATERIAL SURFACE: Diamond Plate

JENSEN METALTECH

450 E. GLENDALE AVE. SPARKS. NV 89431
775-352-2716 FAX: 755-358-8127
JENSENMETALTECH.COM

©2024 Jensen Precast- All rights reserved. All materials appearing as Jensen Precast documents and the like are proprietary work product and are protected under U.S. copyright and other laws. Unless in conjunction with business conducted with Jensen Precast, any use of Jensen Precast work product without express, written consent is prohibited, and recipient is prohibited from distributing any and all work product to non-approved third parties under penalty of civil action.

PART NUMBER & DESCRIPTION: 200018202 DAS1-SD-2136-D2-DP-G-BD

REV: B-1

WEIGHT: 118.62 Lbs

DRAWN BY: E. Massey

SHEET: 1

CREATED: 1/21/2019

MODIFIED: 7/24/2024

BURN LIST - BOM

PART NAME	PART NUMBER	ITEM QTY	DESCRIPTION	STOCK NUMBER	MATERIAL	MASS	SHEET
200018203	100007736	1	Door Component Steel Plate, Top	100007736	SHT STL CQ DP RAW .25	72.575 lbmass	03
200018204	100007735	3	Door Component Steel Perimeter Rail	100007735	STL ASTM A36 SM-HRPO RAW .250	11.083 lbmass	04
200018205	100007735	2	Door Component Steel Perimeter Rail	100007735	STL ASTM A36 SM-HRPO RAW .250	6.243 lbmass	05

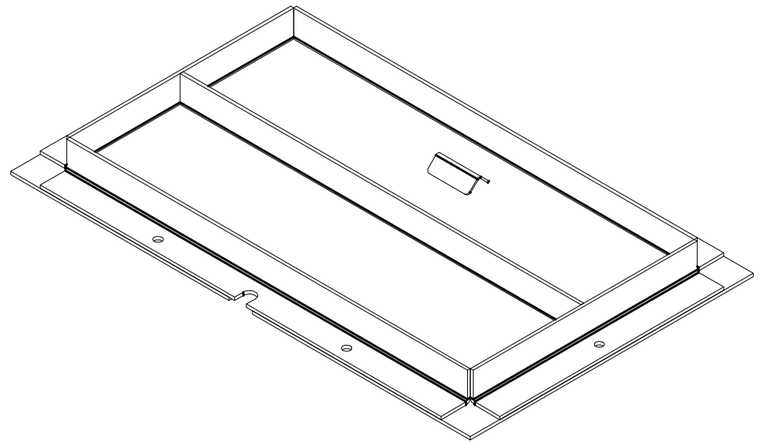

200018202.idw

MATERIAL FINISH: Galvanized

MATERIAL SURFACE: Diamond Plate

JENSEN METALTECH
450 E. GLENDALE AVE. SPARKS. NV 89431
775-352-2716 FAX: 755-358-8127
JENSENMETALTECH.COM

©2024 Jensen Precast- All rights reserved.
All materials appearing as Jensen Precast documents and the like are proprietary work product and are protected under U.S. copyright and other laws.
Unless in conjunction with business conducted with Jensen Precast, any use of Jensen Precast work product without express, written consent is prohibited, and recipient is prohibited from distributing any and all work product to non-approved third parties under penalty of civil action.

PART NUMBER & DESCRIPTION: 200018202 DAS1-SD-2136-D2-DP-G-BD

REV: B-1

WEIGHT: 118.62 Lbs

DRAWN BY: E. Massey

CREATED: 1/21/2019

MODIFIED: 7/24/2024

SHEET: 2

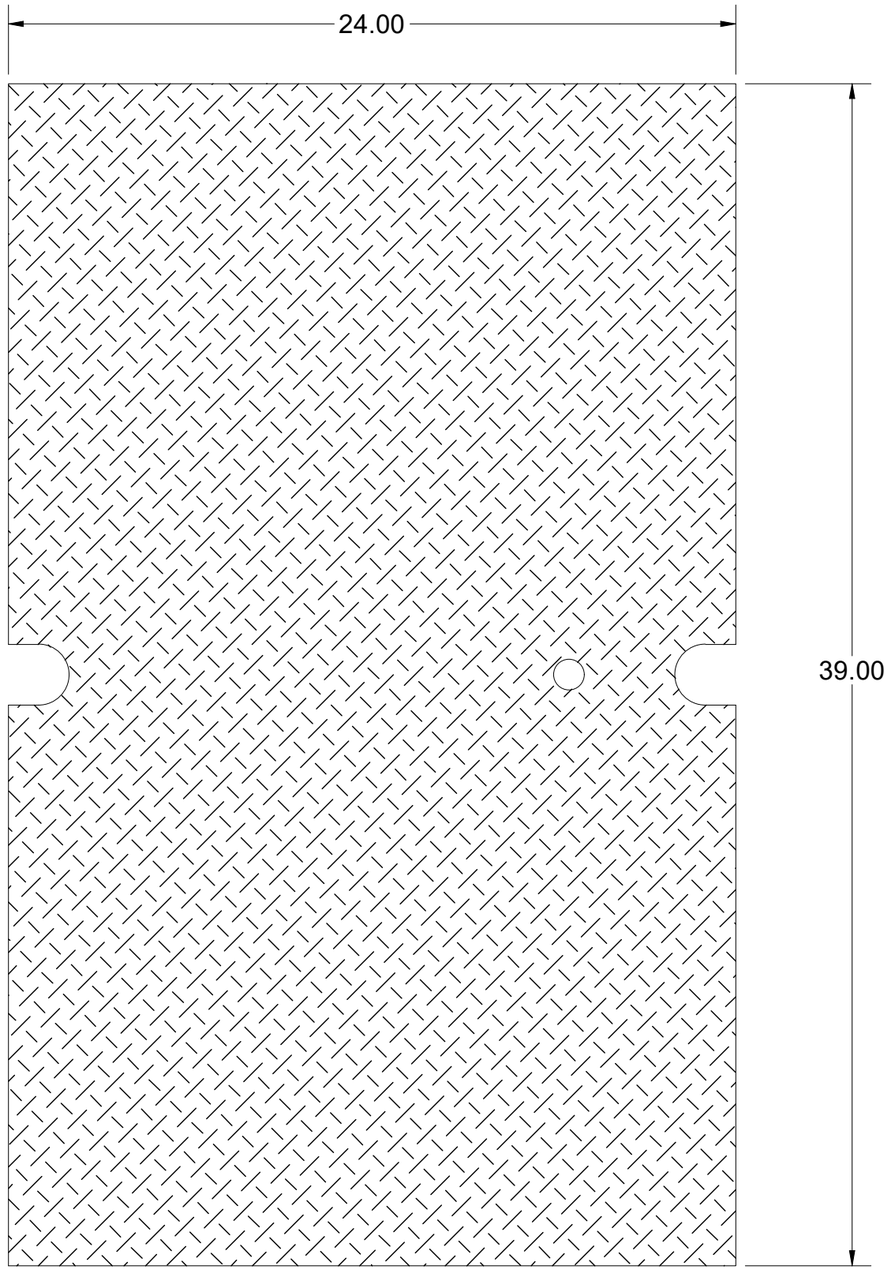

200018202.idw

BEND TABLE			
BEND RADIUS	V-OPENING	BEND ANGLE	BEND DEDUCTION
-	-	-	-

MATERIAL IFS: 100007736

MATERIAL THK: 0.25

MAT DESCRIPTION: SHT STL CQ DP RAW .25

JENSEN METALTECH
450 E. GLENDALE AVE. SPARKS. NV 89431
775-352-2716 FAX: 755-358-8127
JENSENMETALTECH.COM

©2024 Jensen Precast- All rights reserved.
All materials appearing as Jensen Precast documents and the like are proprietary work product and are protected under U.S. copyright and other laws.
Unless in conjunction with business conducted with Jensen Precast, any use of Jensen Precast work product without express, written consent is prohibited, and recipient is prohibited from distributing any and all work product to non-approved third parties under penalty of civil action.

NAME & DESCRIPTION: 200018203
Door Component Steel Plate, Top

REV: B-1

WEIGHT: 72.575 lbmass

DRAWN BY: E. Massey

CREATED: 1/21/2019

MODIFIED: 7/24/2024

SHEET: 3 OF 5

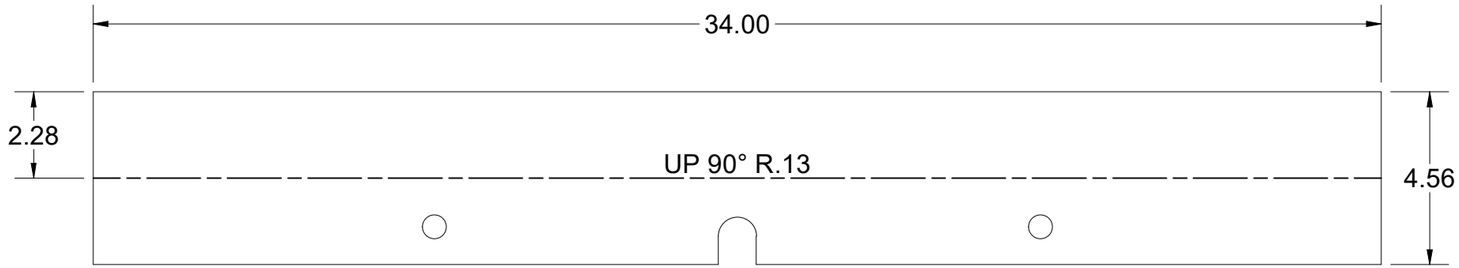

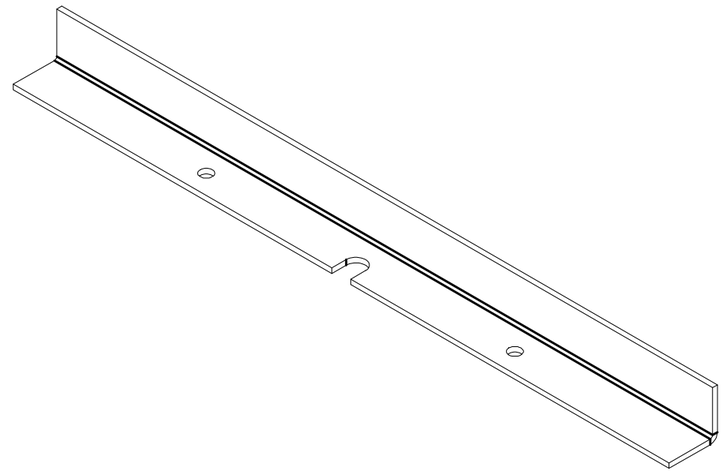

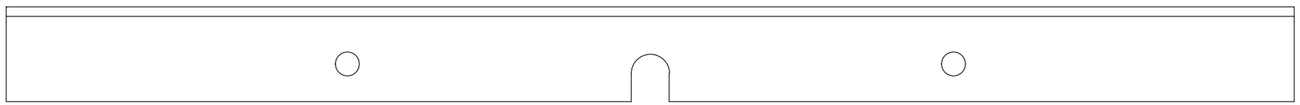

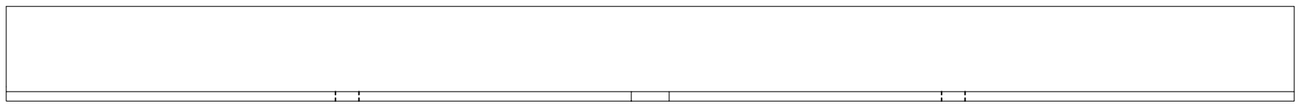

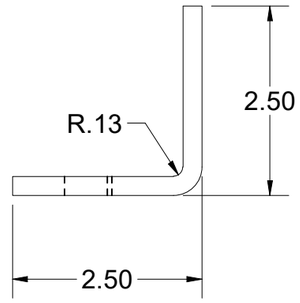

200018202.idw

BEND TABLE				MATERIAL IFS: 100007735
BEND RADIUS	V-OPENING	BEND ANGLE	BEND DEDUCTION	MATERIAL THK: 0.25
0.125	2	90	0.440	MAT DESCRIPTION: STL ASTM A36 SM-HRPO RAW .250

JENSEN METALTECH
450 E. GLENDALE AVE. SPARKS. NV 89431
775-352-2716 FAX: 755-358-8127
JENSENMETALTECH.COM

©2024 Jensen Precast- All rights reserved.
All materials appearing as Jensen Precast documents and the like are proprietary work product and are protected under U.S. copyright and other laws.
Unless in conjunction with business conducted with Jensen Precast, any use of Jensen Precast work product without express, written consent is prohibited, and recipient is prohibited from distributing any and all work product to non-approved third parties under penalty of civil action.

NAME & DESCRIPTION: 200018204 Door Component Steel Perimeter Rail		REV: B-1
WEIGHT: 11.083 lbmass	DRAWN BY: E. Massey	SHEET: 4 OF 5
CREATED: 1/21/2019	MODIFIED: 7/24/2024	

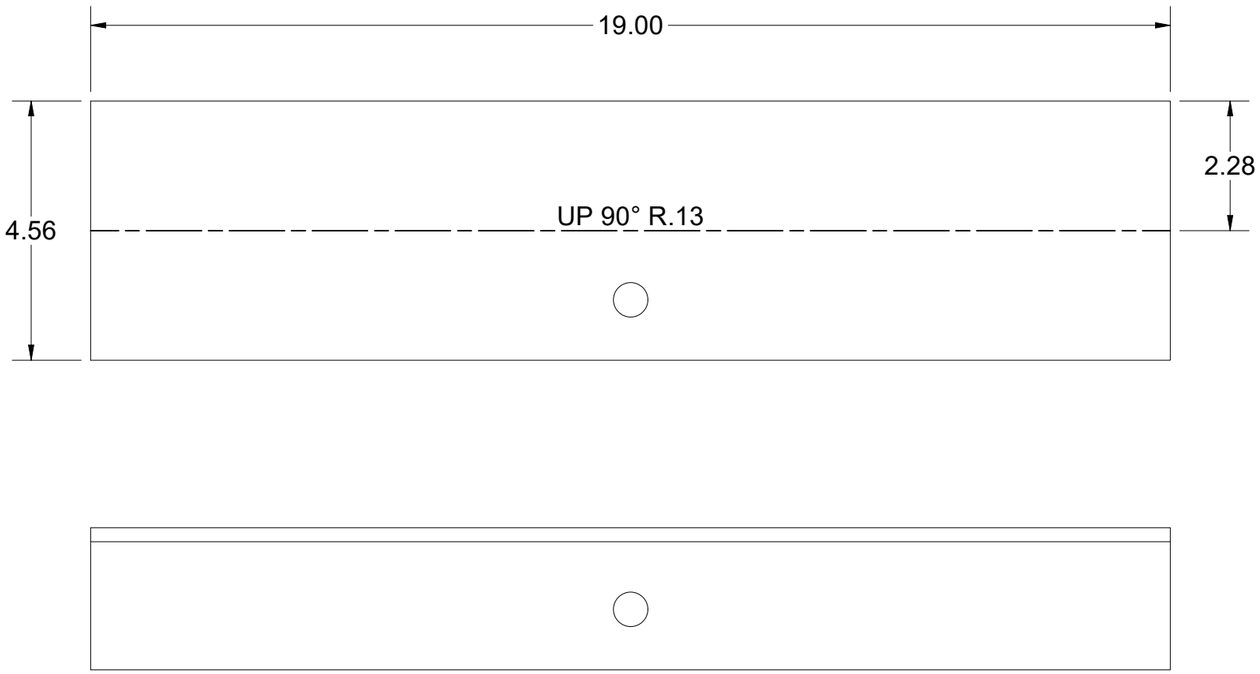

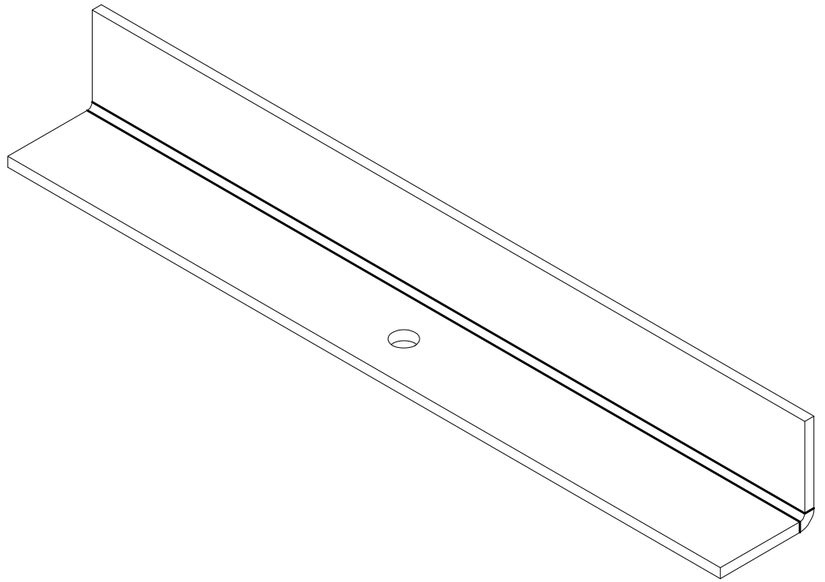

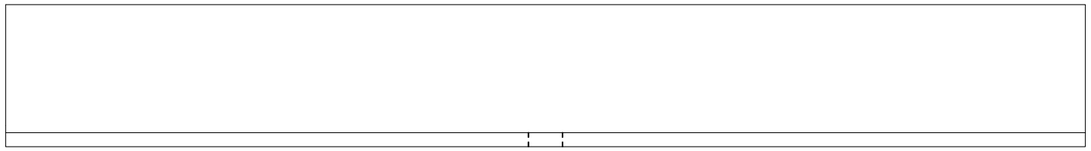

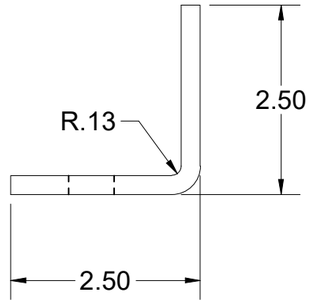

BEND TABLE				MATERIAL IFS: 100007735
BEND RADIUS	V-OPENING	BEND ANGLE	BEND DEDUCTION	MATERIAL THK: 0.25
0.125	2	90	0.440	MAT DESCRIPTION: STL ASTM A36 SM-HRPO RAW .250

JENSEN METALTECH
450 E. GLENDALE AVE. SPARKS. NV 89431
775-352-2716 FAX: 755-358-8127
JENSENMETALTECH.COM

©2024 Jensen Precast- All rights reserved.
All materials appearing as Jensen Precast documents and the like are proprietary work product and are protected under U.S. copyright and other laws.
Unless in conjunction with business conducted with Jensen Precast, any use of Jensen Precast work product without express, written consent is prohibited, and recipient is prohibited from distributing any and all work product to non-approved third parties under penalty of civil action.

NAME & DESCRIPTION: 200018205 Door Component Steel Perimeter Rail		REV: B-1
WEIGHT: 6.243 lbmass	DRAWN BY: E. Massey	SHEET: 5 OF 5
CREATED: 1/21/2019	MODIFIED: 7/24/2024	

200018202.idw