NOTES
■ DESIGNED IN ACCORDANCE WITH AASHTO HS20-44 TRAFFIC BRIDGE LOADING USING 5,500 PSI COMPRESSIVE STRENGTH CONCRETE AND 60,000 PSI YIELD STRENGTH ASTM A-706 STEEL REINFORCEMENT PER CALCS. #2424-R12-DI-THINWALL
■ ALL PARTS TO BE STENCILED: MFG DATE / JOB NUMBER / PRODUCT ID / WEIGHT.

BILL OF MATERIALS

ITEM	UNIT QTY	QTY	PART NUMBER	DESCRIPTION
1	3.325 ft^3	3.325 ft^3	100024079	CONCRETE #19 SCC
2	1	1	100031490	FAS-2424-CD-G-OH02-BRKS
3	1	2	100002782	INSERT THREADED METAL 1/4-20 UNC 1.5IN
4	1	4	100002786	INSERT THREADED METAL 1/2-13 UNC 2-7/8IN
5	1	1	300155314	REINFORCING MAT 300155314

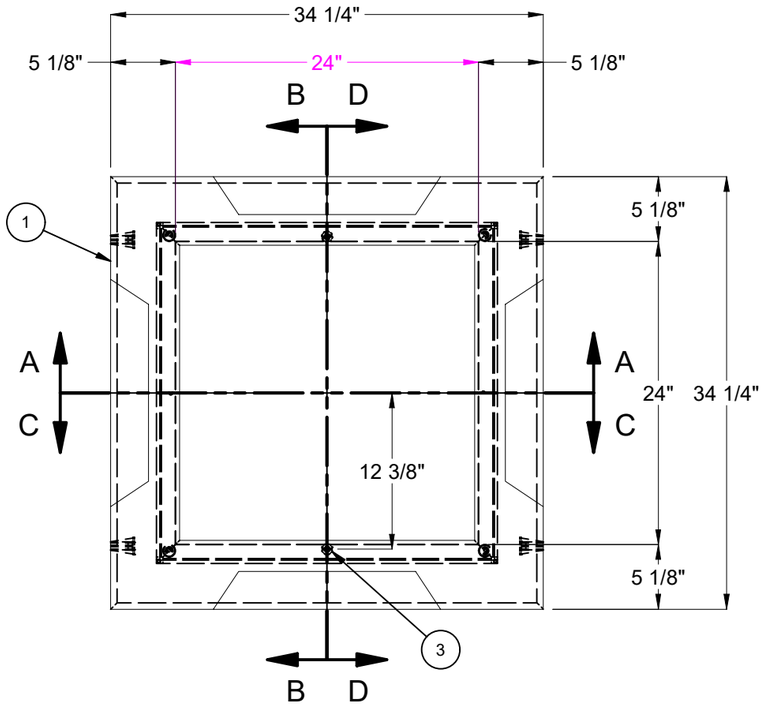

PLAN VIEW

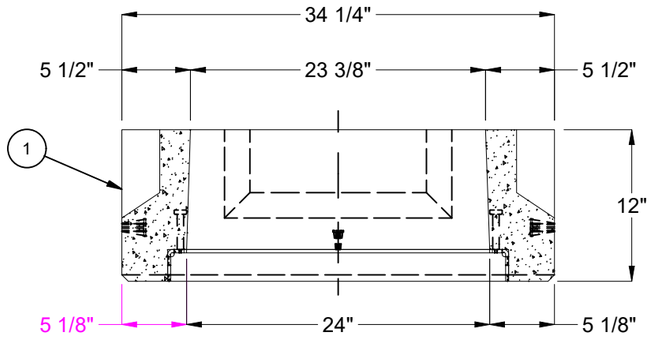

SECTION A-A

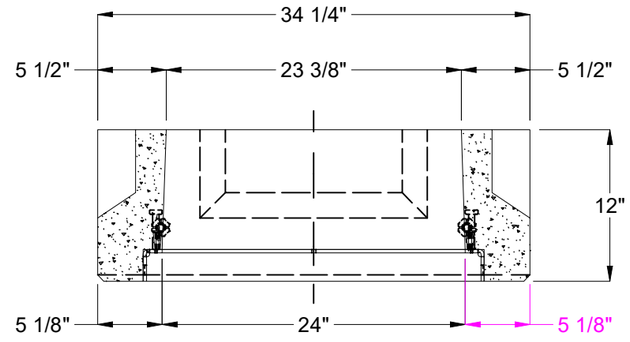

SECTION B-B

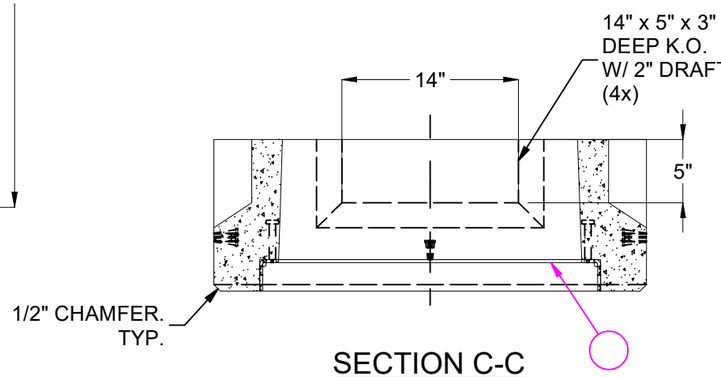

SECTION C-C

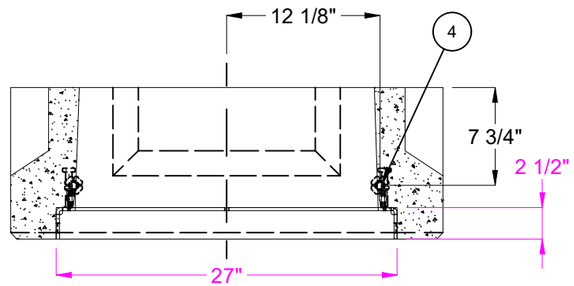

SECTION D-D

LIFTING NOTES
■ INSTALLATION: THIS CONCRETE PRODUCT IS DESIGNED TO BE LIFTED AT 5500 PSI WITH 4 LIFT CONNECTIONS EQUALLY LOADED TO 2 LIFTING POINTS AT A MINIMUM 60° SLING ANGLE, MEASURED FROM HORIZONTAL.
■ DEMOLDING: THIS CONCRETE PRODUCT IS DESIGNED TO BE LIFTED AT 2500 PSI WITH 4 LIFT CONNECTIONS EQUALLY LOADED TO 4 LIFTING POINTS AT A MINIMUM 60° SLING ANGLE, MEASURED FROM HORIZONTAL.
*All rigging shall be design by a qualified professional. Loading diagrams show illustrations of possible rigging setups to achieve the required sling angle and load leg equalization. Other valid rigging configurations are possible. A qualified professional must be consulted prior to lifting.

RIGGING DIAGRAMS*			
INSTALLATION	B	DEMOLDING	C
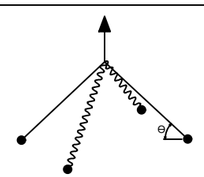		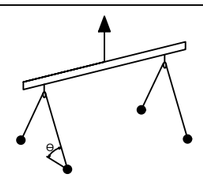	

REVISION HISTORY			
REV	DESCRIPTION	DATE	APPROVED
B-2	RELEASED IN INVENTOR	4/24/2024	

BURY DEPTH:	0.0' - 4.5' to Top		
WATER LEVEL:	Below Structure	APPROX. WEIGHT:	528.56 Lbs
DESIGN SPEC:	ACI 318,ASTM C857	LOADING SPEC:	A-16 (AASHTO HS20-44)
REINFORCEMENT TYPE:	Rebar	LIFTING TYPE:	Insert

JENSEN PRECAST EST. 1968

WWW.JENSENPRECAST.COM

©2024 Jensen Precast- All rights reserved.
All materials appearing as Jensen Precast documents and the like are proprietary work product and are protected under U.S. copyright and other laws.
Unless in conjunction with business conducted with Jensen Precast, any use of Jensen Precast work product without express, written consent is prohibited, and recipient is prohibited from distributing any and all work product to non-approved third parties under penalty of civil action.

DESCRIPTION:	Top Riser 2424x12 Knockout Cast-In Frame CASTING LAYOUT		REV: B-2
PART NUMBER:	200017666	DRAWN BY:	D. Mejia
CREATED:	3/12/2019	MODIFIED:	4/24/2024
			SHEET: 1 OF 1

200017666.idw