DESIGN NOTES:

- CONCRETE SHALL HAVE A 28 DAY MINIMUM COMPRESSIVE STRENGTH OF 5000 PSI
- SOIL UNIT WEIGHT DRY - 110 lbs/cu.ft.
- EQUIVALENT LATERAL PRESSURE DRY - 40 lbs/cu.ft.
- SOIL UNIT WEIGHT WET - 120 lbs/cu.ft.
- EQUIVALENT LATERAL PRESSURE WET - 80 lbs/cu.ft.

PRODUCTION NOTES:

- THIS PRODUCT SHALL ONLY BE PRODUCED IN A JENSEN INFRASTRUCTURE FACILITY
- LIFTING INSERTS SHALL BE INSTALLED PER MANUFACTURER'S REQUIREMENTS
- APPLIED FINISH - NONE
- INTERNAL LINER/COATING - NONE
- EXTERNAL LINER/COATING - NONE

BILL OF MATERIALS

ITEM	UNIT QTY	QTY	PART NUMBER	DESCRIPTION
1	96.236 ft^3	95.800 ft^3	100011425	CONCRETE MIX GENERIC 5000 PSI
2	1	4	100004660	PULL IRON OFFSET B783519 3.5H X 19L X.875DIA GALV
3	*Varies*	272.000 in	100024619	STRUT C-CHANNEL CONCRETE INSERT 1-5/8 X 1-5/8 12GA W/ANCHORS GALV
4	1	1	300120485	REINFORCING MAT 300120485
5	1	8	100002873	ANCHOR DOGBONE P52 4T X 4-1/4" GALV

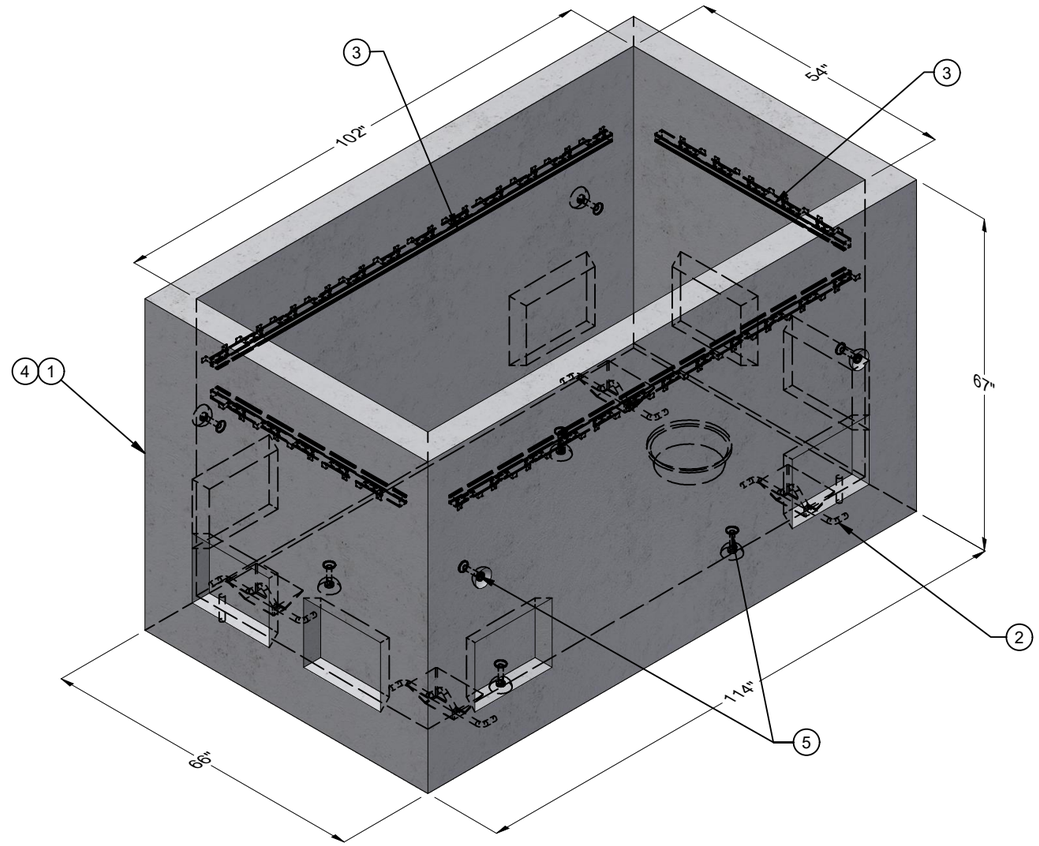

ISO REF

LIFTING NOTES
■ INSTALLATION: THIS CONCRETE PRODUCT IS DESIGNED TO BE LIFTED AT 2500 PSI WITH 4 LIFT CONNECTIONS EQUALLY LOADED TO 4 LIFTING POINTS AT A MINIMUM 60° SLING ANGLE, MEASURED FROM HORIZONTAL.
■ DEMOLDING: THIS CONCRETE PRODUCT IS DESIGNED TO BE LIFTED AT 2500 PSI WITH 4 LIFT CONNECTIONS EQUALLY LOADED TO 4 LIFTING POINTS AT A MINIMUM 90° SLING ANGLE, MEASURED FROM HORIZONTAL.
*All rigging shall be design by a qualified professional. Loading diagrams show illustrations of possible rigging setups to achieve the required sling angle and load leg equalization. Other valid rigging configurations are possible. A qualified professional must be consulted prior to lifting.

RIGGING DIAGRAMS*

INSTALLATION	C	DEMOLDING	E

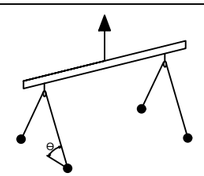

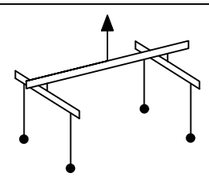

BURY DEPTH:	0.0' - 0.5' to Top		
WATER LEVEL:	3.0'	APPROX. WEIGHT:	14537.47 Lbs
DESIGN SPEC:	ASTM C857	LOADING SPEC:	A-16 (AASHTO HS20-44)
REINFORCEMENT TYPE:	Rebar	LIFTING TYPE:	Dogbone

Infrastructure
JENSEN
WWW.JENSENPRECAST.COM

© Jensen Infrastructure - All rights reserved.
All materials appearing as Jensen Infrastructure documents and the like are proprietary work product and are protected under U.S. copyright and other laws.
Unless in conjunction with business conducted with Jensen Infrastructure , any use of Jensen Infrastructure work product without express, written consent is prohibited, and recipient is prohibited from distributing any and all work product to non-approved third parties under penalty of civil action. This product shall only be produced in a Jensen Infrastructure facility.

CHANGE HISTORY

NO.	DESCRIPTION	DATE	BY
A	DRAWING CREATED 1902-15214-NCA	2/12/19	

DESCRIPTION:	Vault 54102x60 Rect. Bottom Section Sump Turlock Irrig Dist TID CASTING LAYOUT		REV: A
PART NUMBER:	200017609	DRAWN BY:	E. CAMERON
CREATED:	2/7/2019	MODIFIED:	3/15/2019
			SHEET: 1 OF 2

200017609.idw

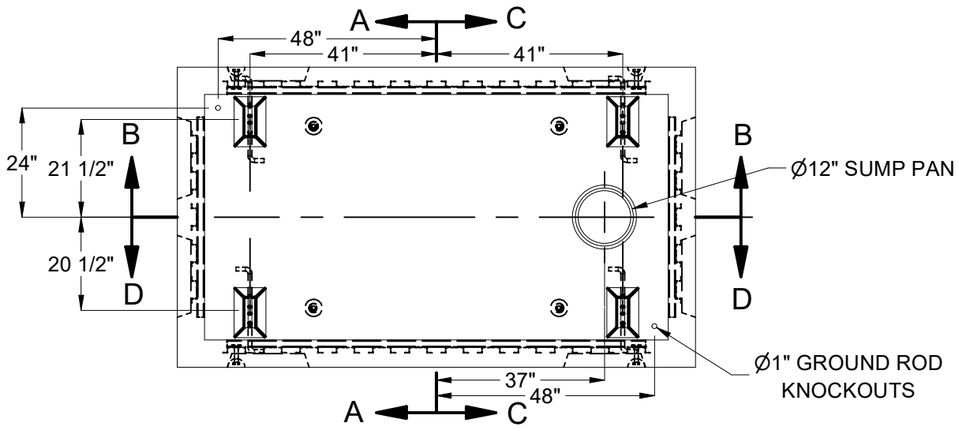

PLAN VIEW

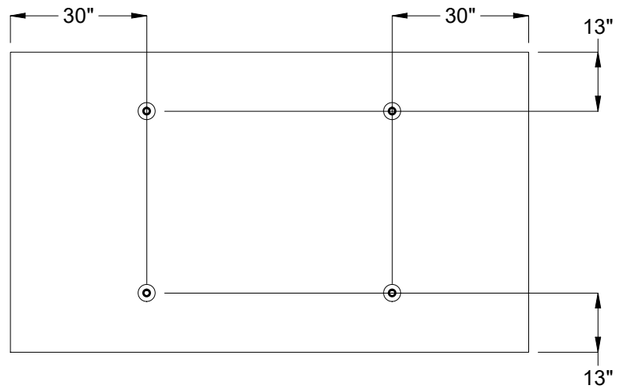

PLAN VIEW
DEMOLDING LIFTERS

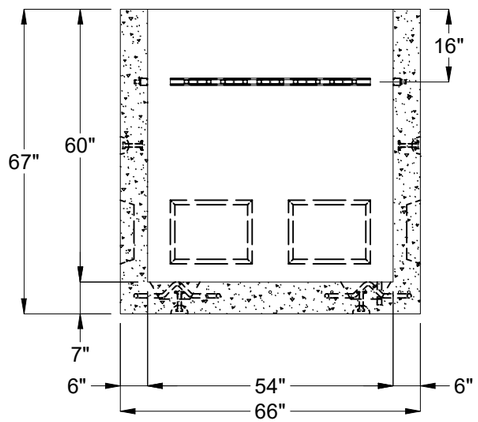

SECTION A-A

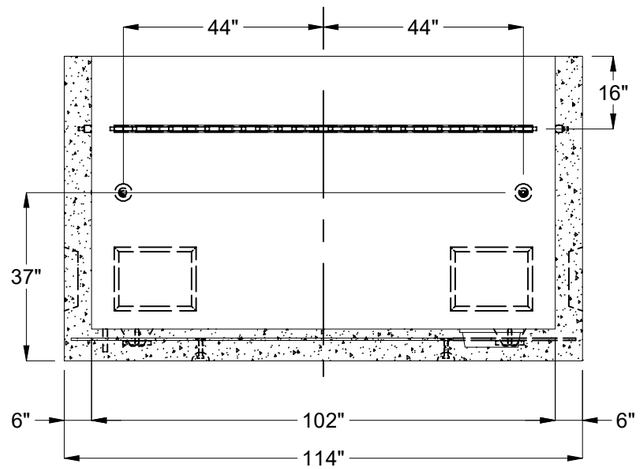

SECTION B-B

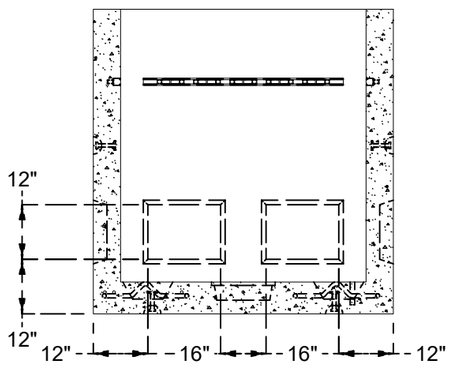

SECTION C-C

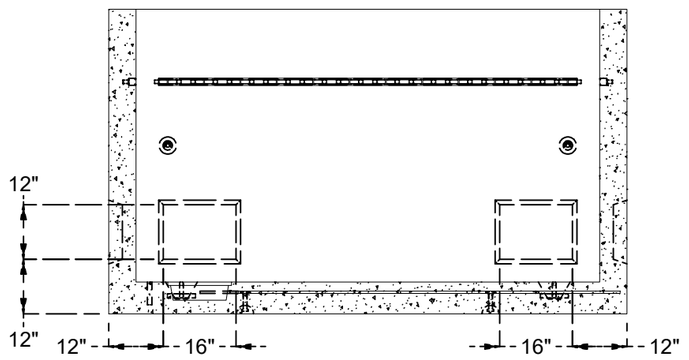

SECTION D-D

BURY DEPTH:	0.0' - 0.5' to Top		
WATER LEVEL:	3.0'	APPROX. WEIGHT:	14537.47 Lbs
DESIGN SPEC:	ASTM C857	LOADING SPEC:	A-16 (AASHTO HS20-44)
REINFORCEMENT TYPE:	Rebar	LIFTING TYPE:	Dogbone

Infrastructure
JENSEN
WWW.JENSENPRECAST.COM

© Jensen Infrastructure - All rights reserved.
All materials appearing as Jensen Infrastructure documents and the like are proprietary work product and are protected under U.S. copyright and other laws.
Unless in conjunction with business conducted with Jensen Infrastructure , any use of Jensen Infrastructure work product without express, written consent is prohibited, and recipient is prohibited from distributing any and all work product to non-approved third parties under penalty of civil action. This product shall only be produced in a Jensen Infrastructure facility.

DESCRIPTION:	Vault 54102x60 Rect. Bottom Section Sump Turlock Irrig Dist TID CASTING DRAWING		REV: A
PART NUMBER:	200017609	DRAWN BY:	E. CAMERON
CREATED:	2/7/2019	MODIFIED:	3/15/2019
			SHEET: 2 OF 2

200017609.idw