| DESIGN NOTES |
|---|
| ■ DESIGNED IN ACCORDANCE WITH AASHTO HS20-44 TRAFFIC BRIDGE LOADING USING 5,500 PSI COMPRESSIVE STRENGTH CONCRETE AND 60,000 PSI YIELD STRENGTH ASTM A-706 STEEL REINFORCEMENT PER CALCS. #33436. |
| ■ "GRD" STENCILED IN RED LETTERS (1 1/2" MIN. - 2" MAX.) |
| ■ ALL PARTS TO BE STENCILED: MFG DATE / PRODUCT ID / WEIGHT. |

## BILL OF MATERIALS

| ITEM | UNIT QTY | QTY | PART NUMBER | DESCRIPTION |
|---|---|---|---|---|
| 1 | 166.417 ft^3 | 166.417 ft^3 | 100006029 | CONCRETE 5500 PSI SCC ED |
| 2 | 1 | 4 | 100002963 | ANCHOR EYE DOGBONE P53 8T X 7-1/16" GALV |
| 3 | 1 | 4 | 100028399 | ANCHOR SWIFT LIFT TENSION BAR 8T 2500PSI DAYTON P60 |
| 4 | 1 | 4 | 100002879 | ANCHOR DOGBONE P52 8T X 4-3/4" GALV |
| 5 | 1 | 24 | 100005936 | TERMINATOR DUCT WITH SEAL 5IN T5001 |
| 6 | 1 | 52 | 100012720 | INSERT PLASTIC W/ BREAK OFF SNAP 0.5IN |
| 7 | 1 | 4 | 100003026 | PULL IRON OFFSET .875DIA 6H X 5W X 10.875L GALV |
| 8 | 1 | 2 | 100005932 | INSERT GROUND BRONZE BOTTLE ROCKET 1/2-13 UNC WITH 11IN COPPER ROD 12H69 |
| 9 | 1 | 4 | 100008247 | INSERT COIL THIN SLAB DOUBLE 4LEG 1 X 5 GALV CX-48 |
| 10 | 1 | 1 | 300120933 | REINFORCING MAT 300120933 |

200017101.idw

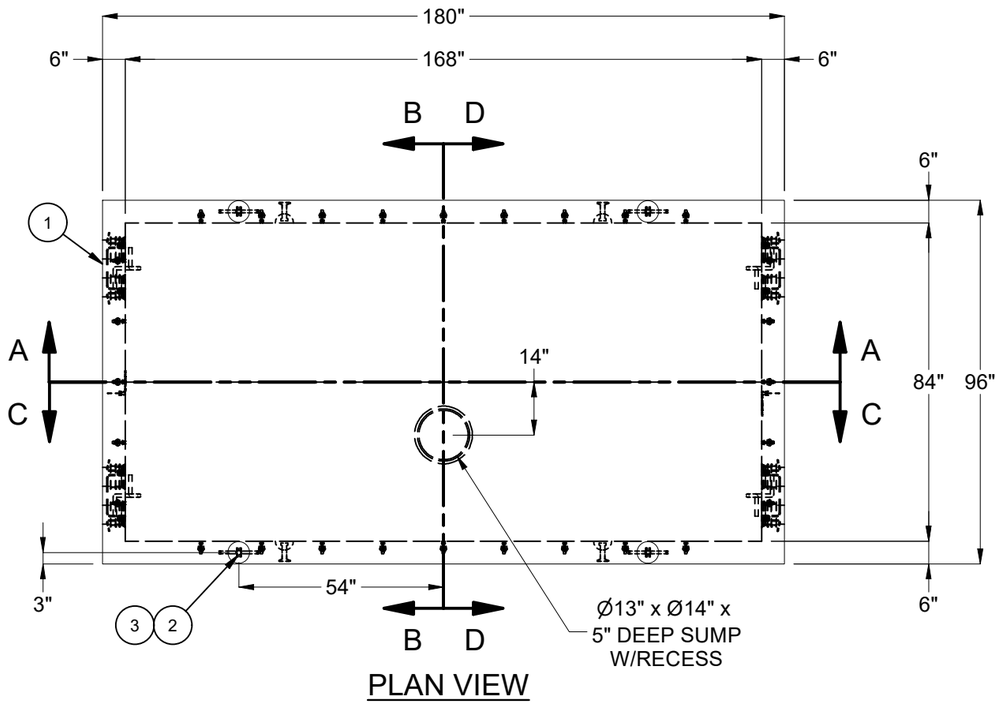


PLAN VIEW

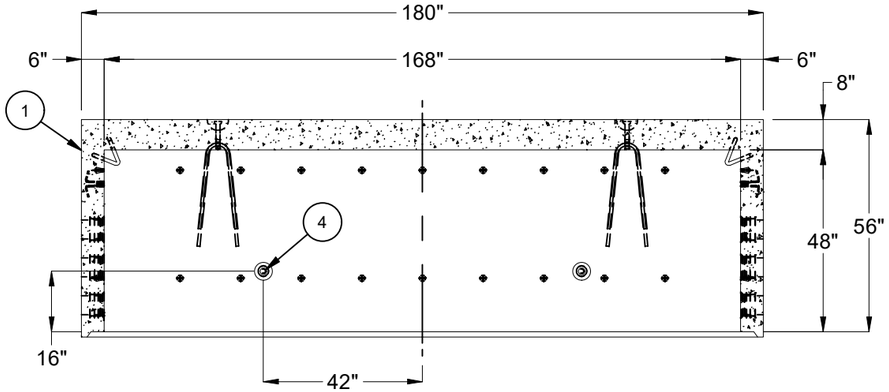


SECTION A-A

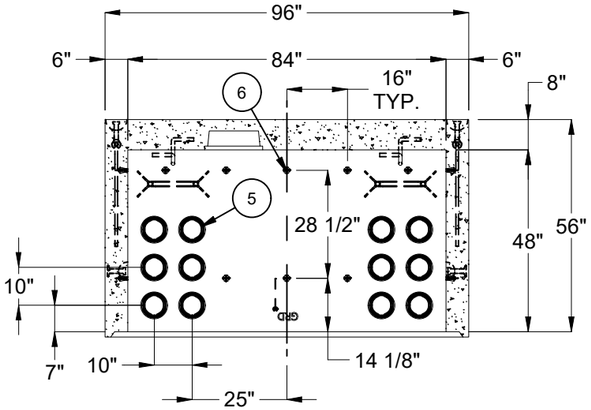


SECTION B-B

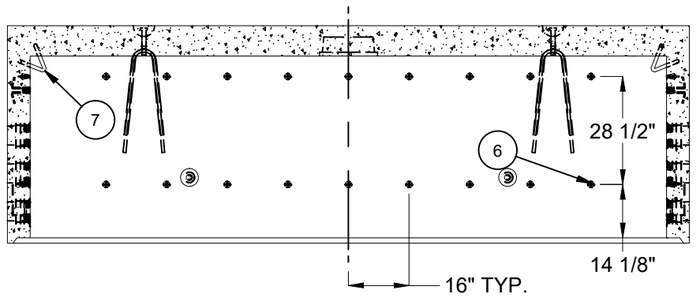


SECTION C-C

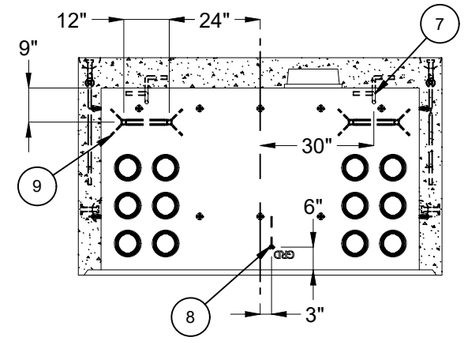


SECTION D-D

| LIFTING NOTES |
|---|
| ■ INSTALLATION: THIS CONCRETE PRODUCT IS DESIGNED TO BE LIFTED AT 5500 PSI WITH 4 LIFT CONNECTIONS EQUALLY LOADED TO 4 LIFTING POINTS AT A MINIMUM 60° SLING ANGLE, MEASURED FROM HORIZONTAL. |
| ■ DEMOLDING: THIS CONCRETE PRODUCT IS DESIGNED TO BE LIFTED AT 2500 PSI WITH 4 LIFT CONNECTIONS EQUALLY LOADED TO 4 LIFTING POINTS AT A MINIMUM 90° SLING ANGLE, MEASURED FROM HORIZONTAL. |
| *All rigging shall be design by a qualified professional. Loading diagrams show illustrations of possible rigging setups to achieve the required sling angle and load leg equalization. Other valid rigging configurations are possible. A qualified professional must be consulted prior to lifting. |

RIGGING DIAGRAMS*

| INSTALLATION | C | DEMOLDING | E |
|---|---|---|---|

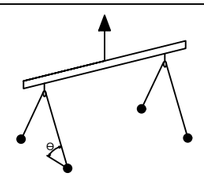

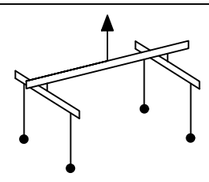

| | | | |
|---|---|---|---|
| BURY DEPTH: | 6.3' - 6.3' to Top | | |
| WATER LEVEL: | 3.0' | APPROX. WEIGHT: | 25087.57 Lbs |
| DESIGN SPEC: | ACI 318,ASTM C857 | LOADING SPEC: | A-16 (AASHTO HS20-44) |
| REINFORCEMENT TYPE: | Rebar | LIFTING TYPE: | Dogbone |

Infrastructure
JENSEN
WWW.JENSENINFRASTRUCTURE.COM

©2026 Jensen Infrastructure - All rights reserved.
All materials appearing as Jensen Infrastructure documents and the like are proprietary work product and are protected under U.S. copyright and other laws.
Unless in conjunction with business conducted with Jensen Infrastructure , any use of Jensen Infrastructure work product without express, written consent is prohibited, and recipient is prohibited from distributing any and all work product to non-approved third parties under penalty of civil action.
This product shall only be produced in a Jensen Infrastructure facility.

REVISION HISTORY

| REV | DESCRIPTION | DATE | APPROVED |
|---|---|---|---|
| D-1-1 | UPDATED DRAWING | 4/2/2026 | |

| | | | |
|---|---|---|---|
| DESCRIPTION: | Vault 84168x48 Rect. Bottom Section Terminators Sump Edison UGS SS541 TYPE 1 & 2 CASTING LAYOUT | | REV: D-1-1 |
| PART NUMBER: | 200017101 | DRAWN BY: | J. Prado |
| CREATED: | 3/2/2019 | MODIFIED: | 4/2/2026 |
| | | | SHEET: 1 OF 1 |