BILL OF MATERIALS

ITEM	UNIT QTY	QTY	PART NUMBER	DESCRIPTION
1	4.800 ft^3	4.800 ft^3	100025244	POLYMER CONCRETE - FIBER REINFORCED
2	1	2	200016652	STRUT C-CHANNEL 1-5/8 X 1-5/8 16CA SOLID GALV W/ ATTACHED REBAR
3	1	1	100002771	INSERT FERRULE LOOP 1/2 X 2-3/4 PLAIN FX-5
4	1	2	300120567	REINFORCING MAT 300120567

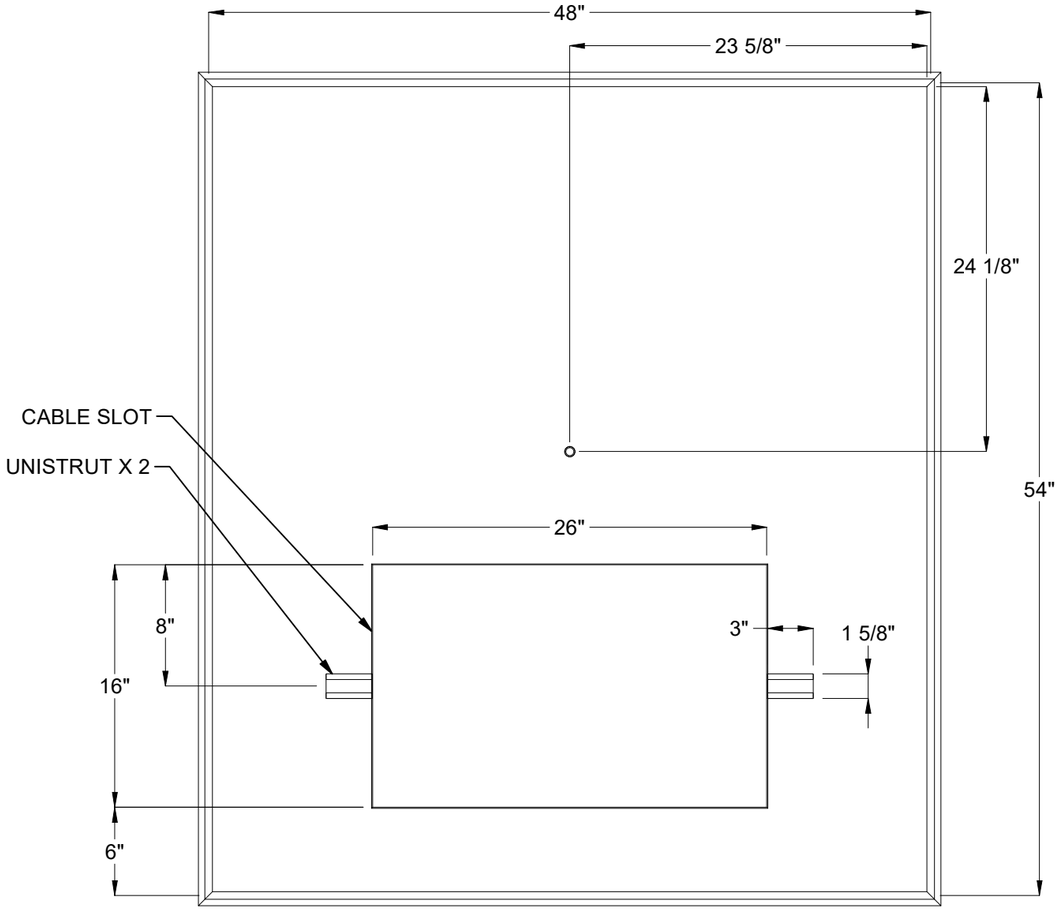

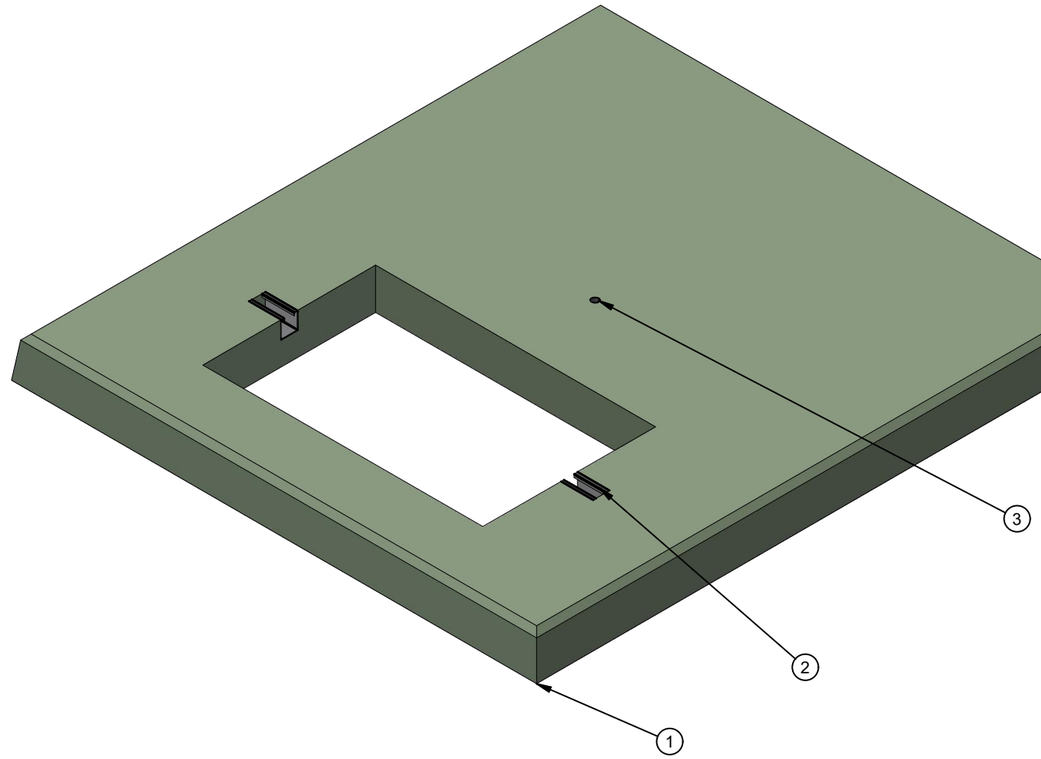

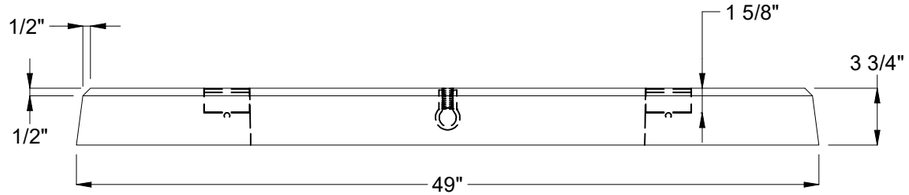

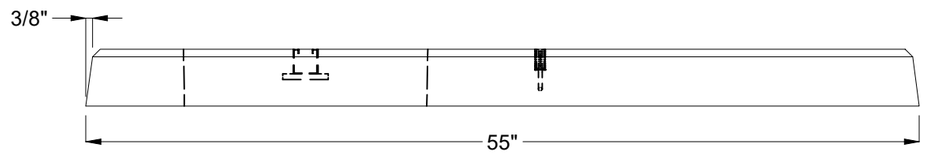

200016586.idw

PALLET QUANTITY:		APPROX. WEIGHT:	586.97 lbs	DESCRIPTION: PPC 4854-1626-3.75 Single Phase Unistrut Polymer Concrete Transformer Pad	REV: A
CERTIFICATION:		DESIGN/TEST LOAD:	2.4/2.4 kips		
DESIGN SPEC:	NVE MP-7	LOADING SPEC:		PART #: 200016586	DRAWN BY: J. Woods
AGENCY:	NVE	AGENCY SPEC:	MP-7 Rev. 9A	CREATED: 2/20/2019	MODIFIED: 2/26/2019

JENSEN COMPOSITES
825 STENERI WAY
SPARKS, NV 89431
WWW.JENSENPRECAST.COM

©2018 Jensen Precast- All rights reserved.
All materials appearing as Jensen Precast documents and the like are proprietary work product and are protected under U.S. copyright and other laws.
Unless in conjunction with business conducted with Jensen Precast, any use of Jensen Precast work product without express, written consent is prohibited, and recipient is prohibited from distributing any and all work product to non-approved third parties under penalty of civil action.

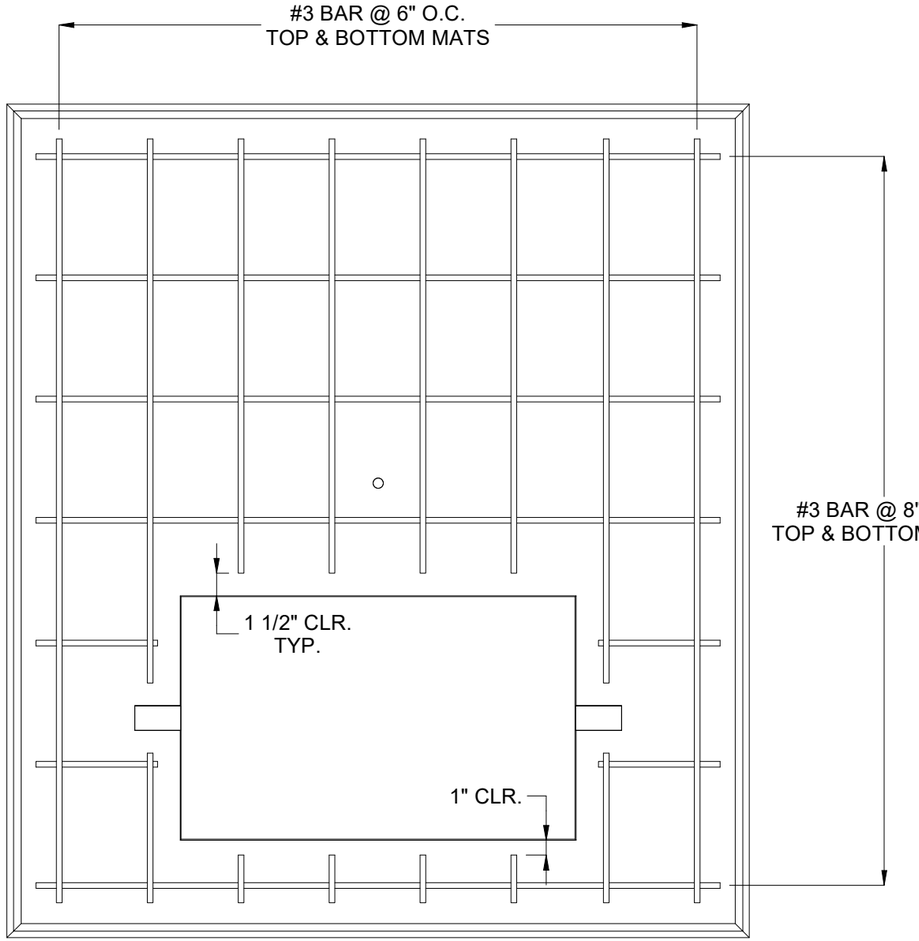

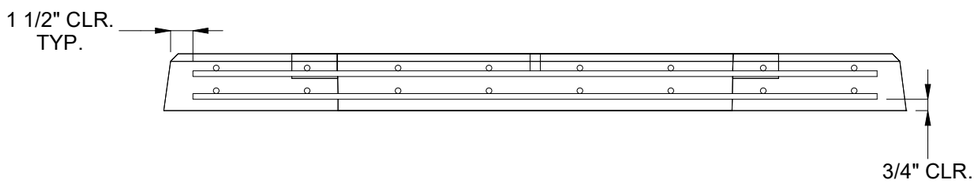

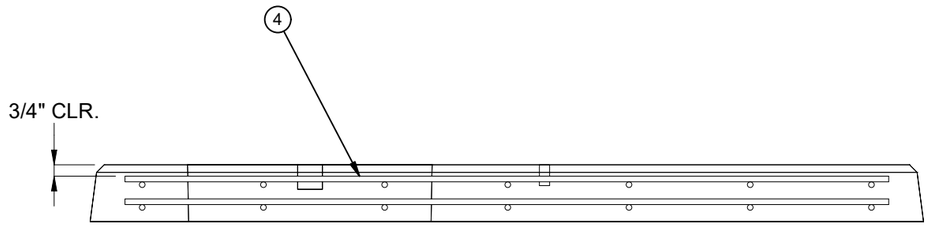

PALLET QUANTITY:		APPROX. WEIGHT:	586.97 lbs
CERTIFICATION:		DESIGN/TEST LOAD:	2.4/2.4 kips
DESIGN SPEC:	NVE MP-7	LOADING SPEC:	
AGENCY:	NVE	AGENCY SPEC:	MP-7 Rev. 9A

JENSEN COMPOSITES
825 STENERI WAY
SPARKS, NV 89431
WWW.JENSENPRECAST.COM

©2018 Jensen Precast- All rights reserved.
All materials appearing as Jensen Precast documents and the like are proprietary work product and are protected under U.S. copyright and other laws.
Unless in conjunction with business conducted with Jensen Precast, any use of Jensen Precast work product without express, written consent is prohibited, and recipient is prohibited from distributing any and all work product to non-approved third parties under penalty of civil action.

DESCRIPTION:	PPC 4854-1626-3.75 Single Phase Unistrut Polymer Concrete Transformer Pad		REV: A
PART #:	200016586	DRAWN BY:	J. Woods
CREATED:	2/20/2019	MODIFIED:	2/26/2019
			SHEET: 2 OF 2

200016586.idw