DESIGN NOTES
PART NUMBER AND LOAD RATING TO BE STENCILED UNDER LID AND ON INSIDE AND OUTSIDE OF BOX

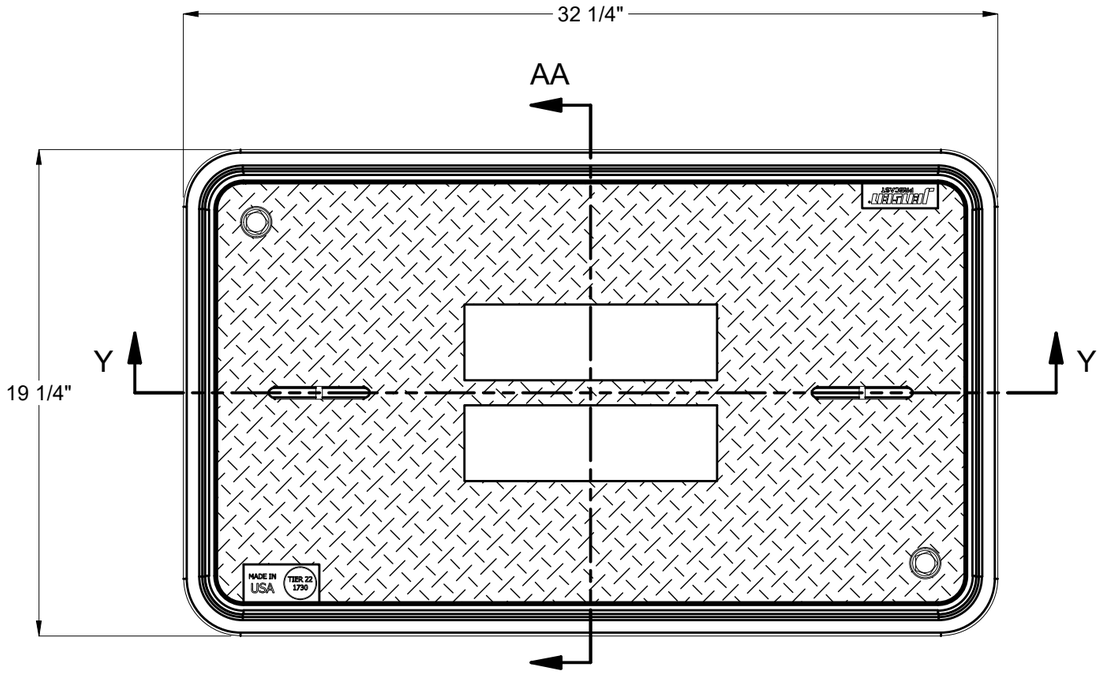

PLAN VIEW

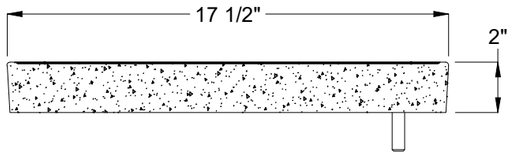

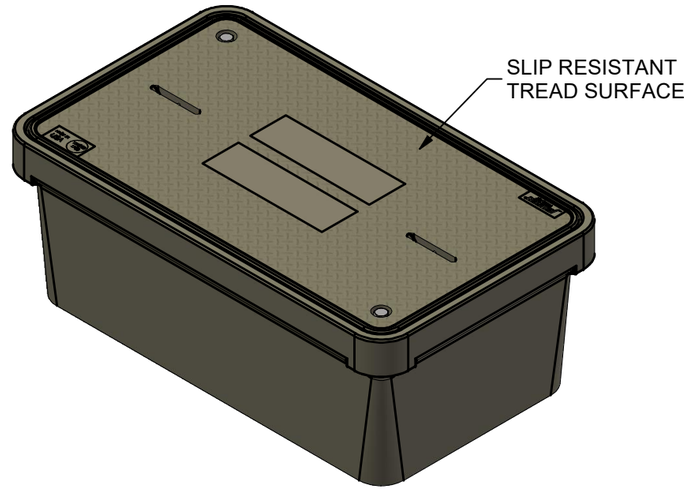

ISO VIEW

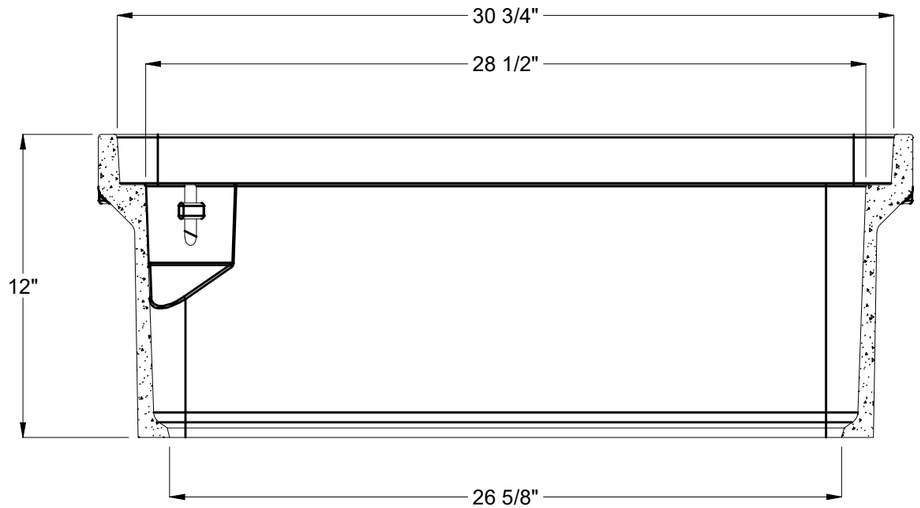

SECTION Y-Y

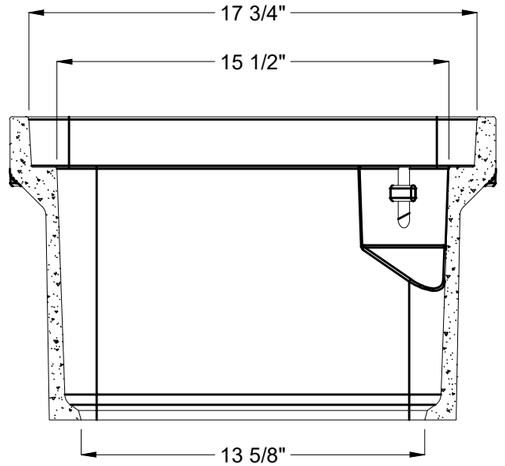

SECTION AA-AA

DESIGN SPEC: ANSI/SCTE-77	APPROX. WEIGHT: 132.42 lbs	JENSEN PRECAST EST. 1968	©2023 Jensen Precast- All rights reserved. Unless expressly authorized by Jensen Precast any use or duplication is strictly prohibited under penalty of civil action or codes.	DESCRIPTION: HPC 1730x12 Polymer Assembly 1/2-13 SS Penta Caltrans-Ex V1	REV:
AGENCY:	DESIGN/TEST LOAD: 22.5/33.75 kip				SHEET: 1 OF 3
AGENCY SPEC:	LOADING SPEC: Tier-22			PART #: 200076367 / DRAWN BY: M. Baumann / CREATED: 6/8/2023 / MODIFIED: 6/21/2023	

CaltransSubmittalPackage_1730V1.idw

DESIGN NOTES
PART NUMBER AND LOAD RATING TO BE STENCILED UNDER LID AND ON INSIDE AND OUTSIDE OF BOX
NO EXPOSED OR LOOSE FIBERS ON COVERS

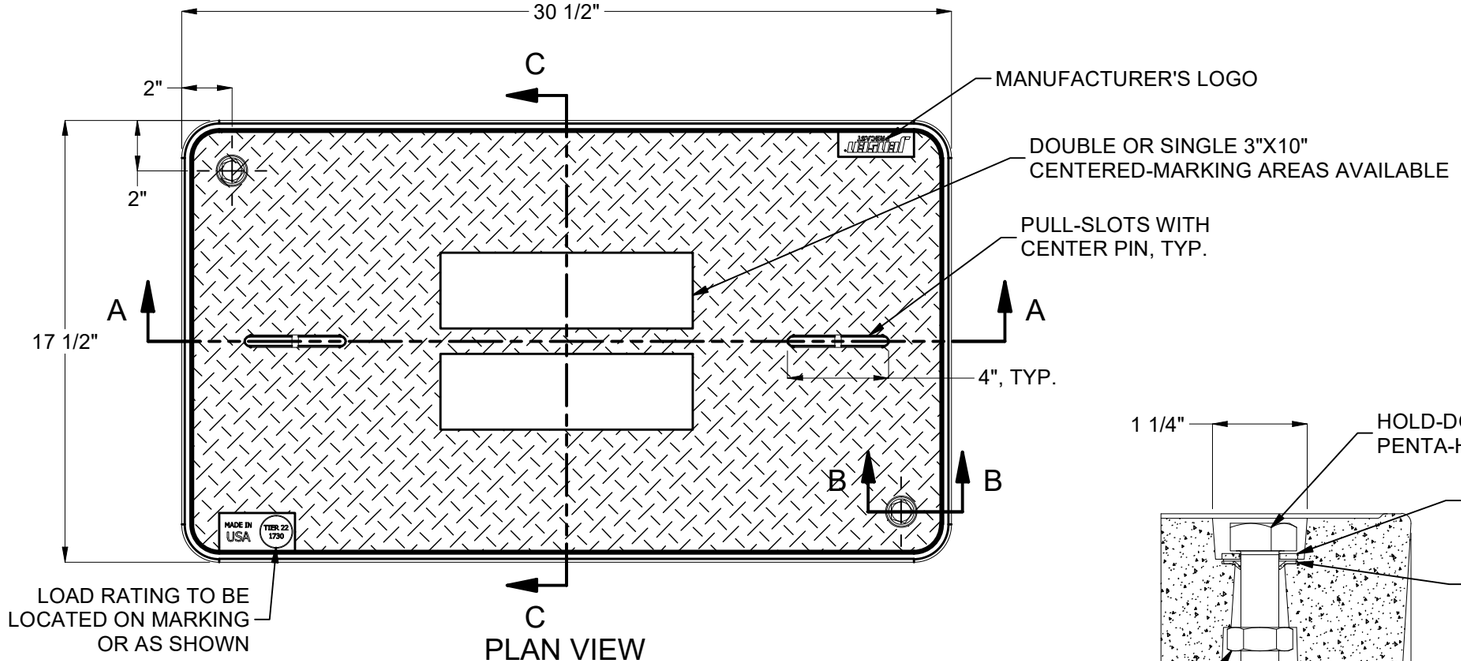

PLAN VIEW

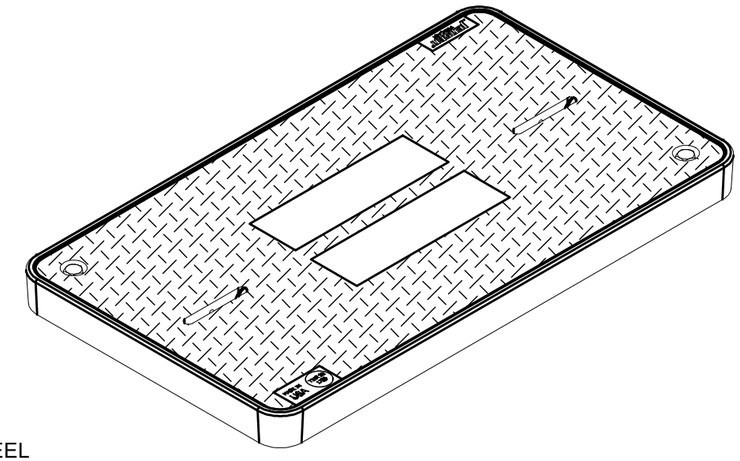

ISO VIEW

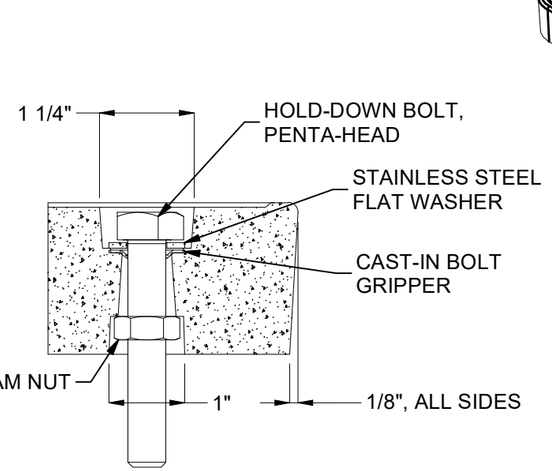

SECTION B-B
BOLT-DOWN RECESS DETAIL, TYP.

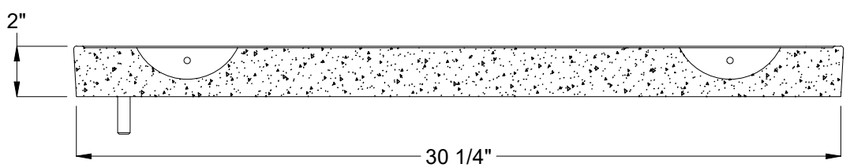

SECTION A-A

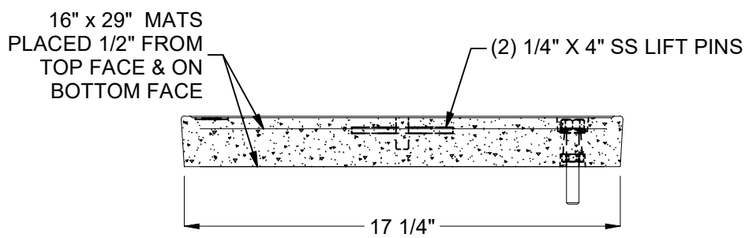

SECTION C-C

DESIGN SPEC: ANSI/SCTE-77	APPROX. WEIGHT: 72.32 lbs	JENSEN PRECAST EST. 1968	©2023 Jensen Precast- All rights reserved. Unless expressly authorized by Jensen Precast any use or duplication is strictly prohibited under penalty of civil action or codes.	DESCRIPTION: HPC 1730x2 Polymer Cover Bolt Down Caltrans Ex	REV:
AGENCY:	DESIGN/TEST LOAD: 22.5/33.75 kip				SHEET: 2 OF 3
AGENCY SPEC:	LOADING SPEC: Tier-22			PART #: 200075995 / DRAWN BY: M. Baumann / CREATED: 2/19/2019 / MODIFIED: 6/21/2023	

CaltransSubmittalPackage_1730V1.idw

DESIGN NOTES
PART NUMBER AND LOAD RATING TO BE STENCILED UNDER LID AND ON INSIDE AND OUTSIDE OF BOX

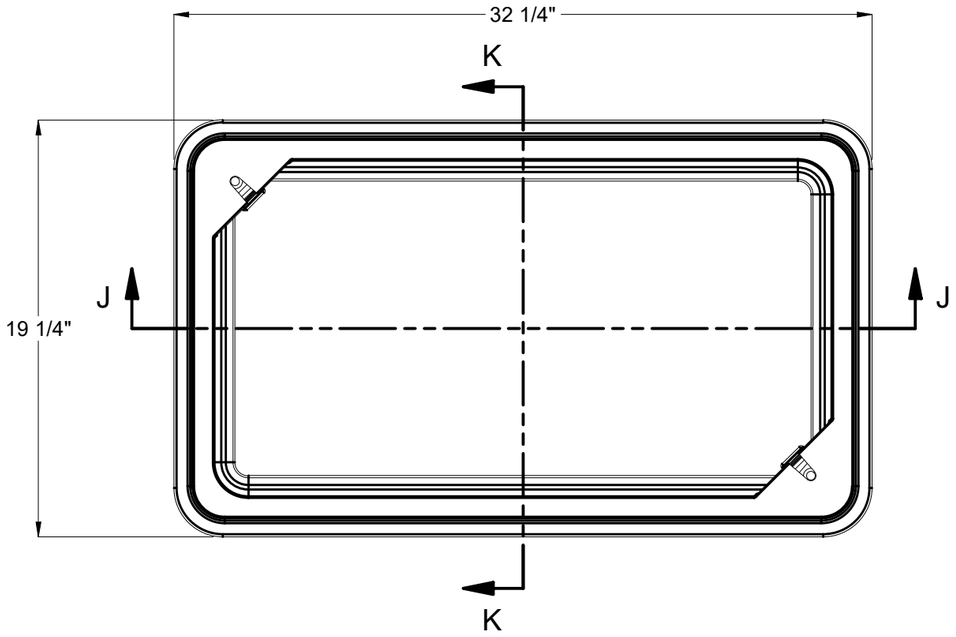

PLAN VIEW

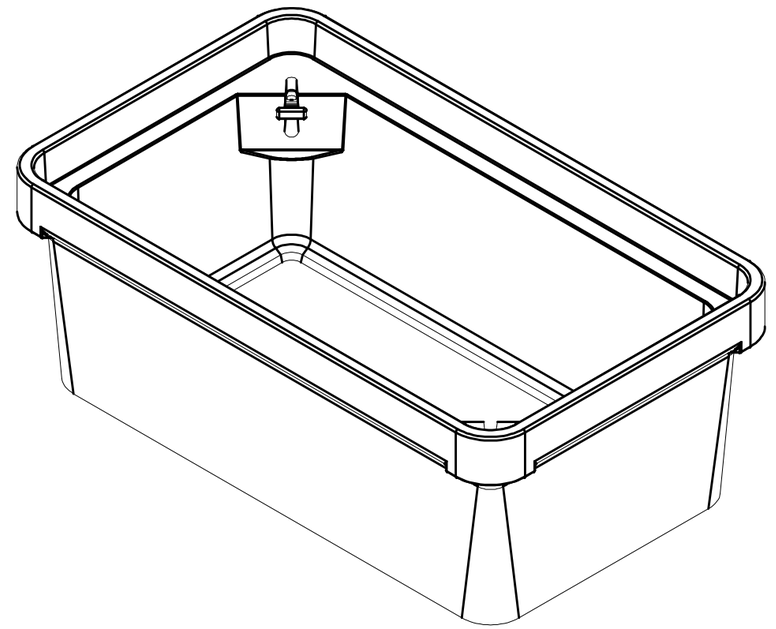

ISO VIEW

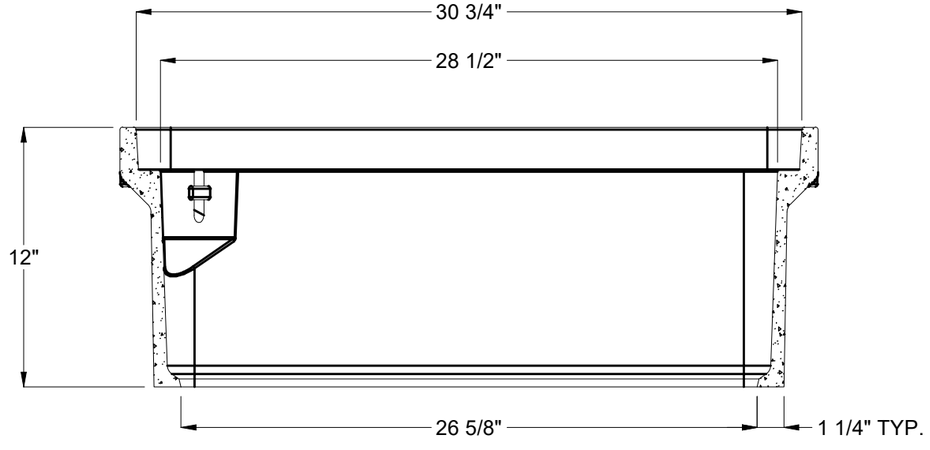

SECTION J-J

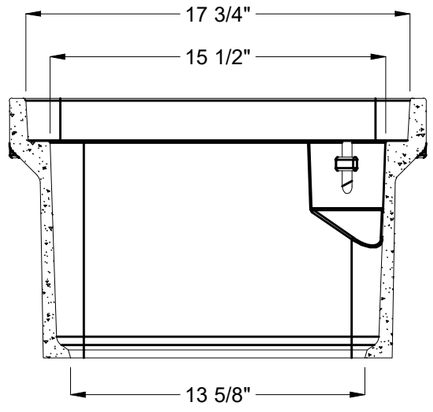

SECTION K-K

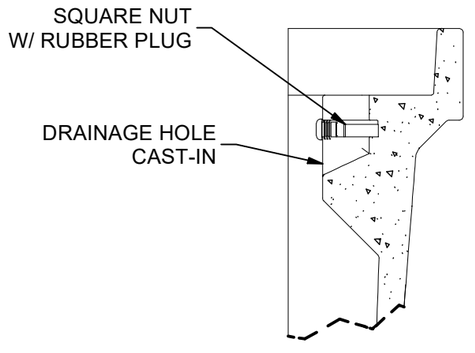

DETAIL CORNER RECESS

DESIGN SPEC: ANSI/SCTE-77	APPROX. WEIGHT: 60.1 lbs	JENSEN PRECAST EST. 1968	©2023 Jensen Precast- All rights reserved. Unless expressly authorized by Jensen Precast any use or duplication is strictly prohibited under penalty of civil action or codes.	DESCRIPTION: HPC 1730x12 Polymer Box 1/2-13 SS Nut V1	REV: A-4
AGENCY:	DESIGN/TEST LOAD: 22.5/33.75 kip			PART #: 200016534 / DRAWN BY: M. Baumann	SHEET: 3 OF 3
AGENCY SPEC:	LOADING SPEC: Tier-22			CREATED: 2/20/2019 / MODIFIED: 6/21/2023	

CaltransSubmittalPackage_1730V1.idw