DESIGN NOTES
PART NUMBER AND LOAD RATING TO BE STENCILED UNDER LID AND ON INSIDE AND OUTSIDE OF BOX
NO EXPOSED OR LOOSE FIBERS ON COVERS

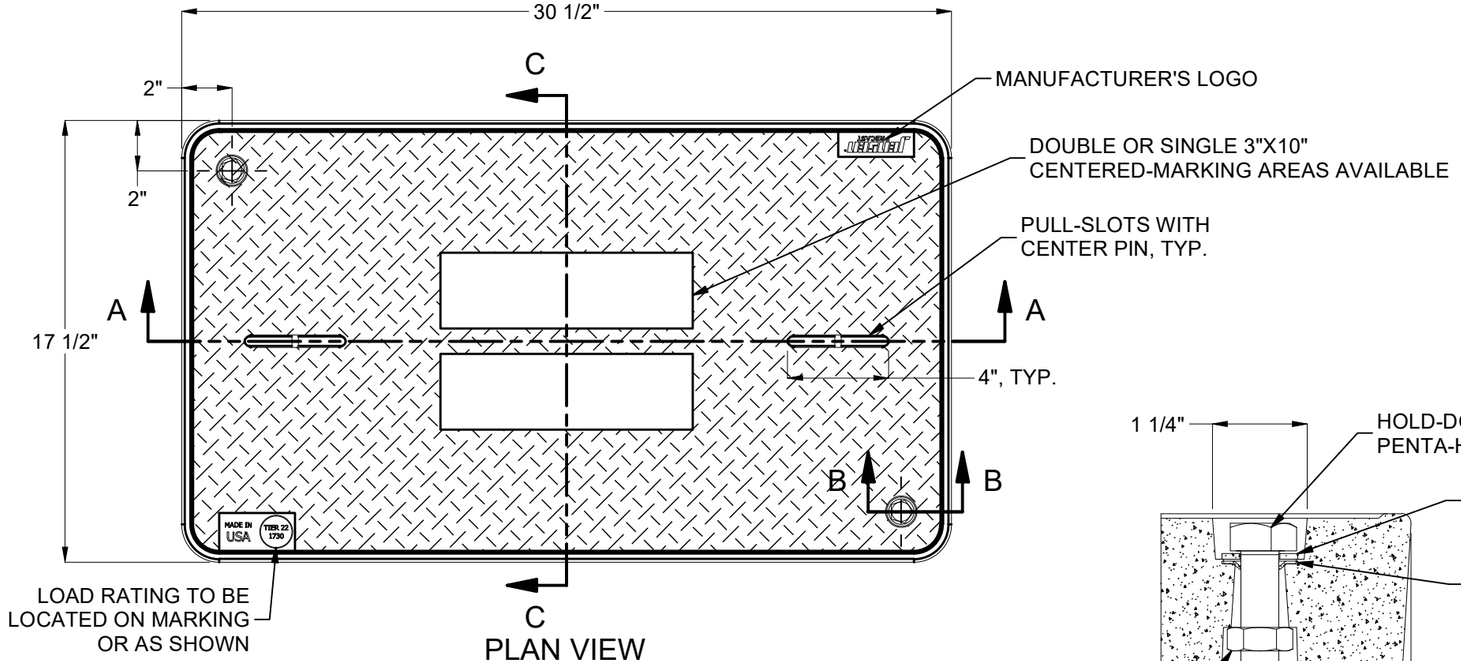

PLAN VIEW

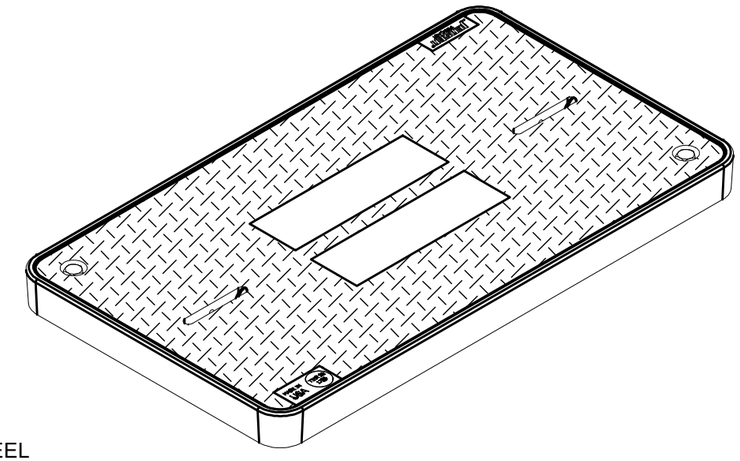

ISO VIEW

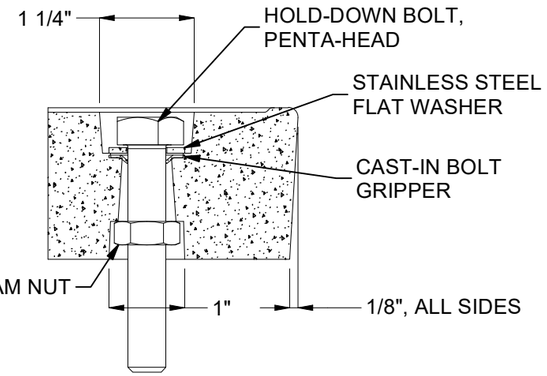

SECTION B-B
BOLT-DOWN RECESS DETAIL, TYP.

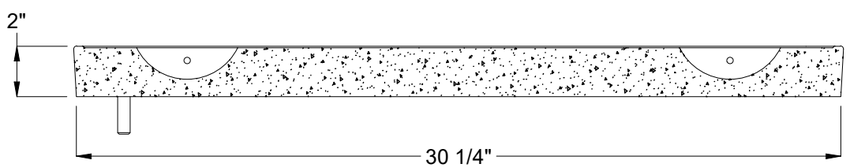

SECTION A-A

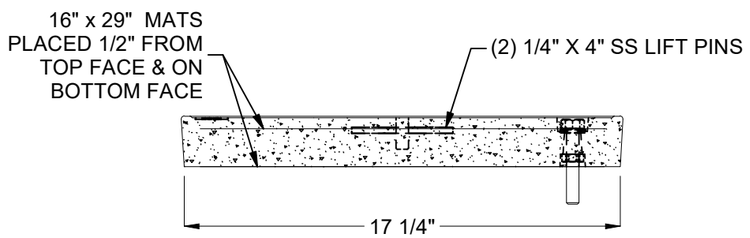

SECTION C-C

DESIGN SPEC: ANSI/SCTE-77	APPROX. WEIGHT: 72.32 lbs	JENSEN PRECAST EST. 1968	©2023 Jensen Precast- All rights reserved. Unless expressly authorized by Jensen Precast any use or duplication is strictly prohibited under penalty of civil action or codes.	DESCRIPTION: HPC 1730x2 Polymer Cover Bolt Down Caltrans Ex	REV:
AGENCY:	DESIGN/TEST LOAD: 22.5/33.75 kip				
AGENCY SPEC:	LOADING SPEC: Tier-22			PART #: 200075995 / DRAWN BY: M. Baumann / CREATED: 2/19/2019 / MODIFIED: 6/20/2023	SHEET: 1 OF 10

CaltransSubmittalPackage.idw

DESIGN NOTES
PART NUMBER AND LOAD RATING TO BE STENCILED UNDER LID AND ON INSIDE AND OUTSIDE OF BOX

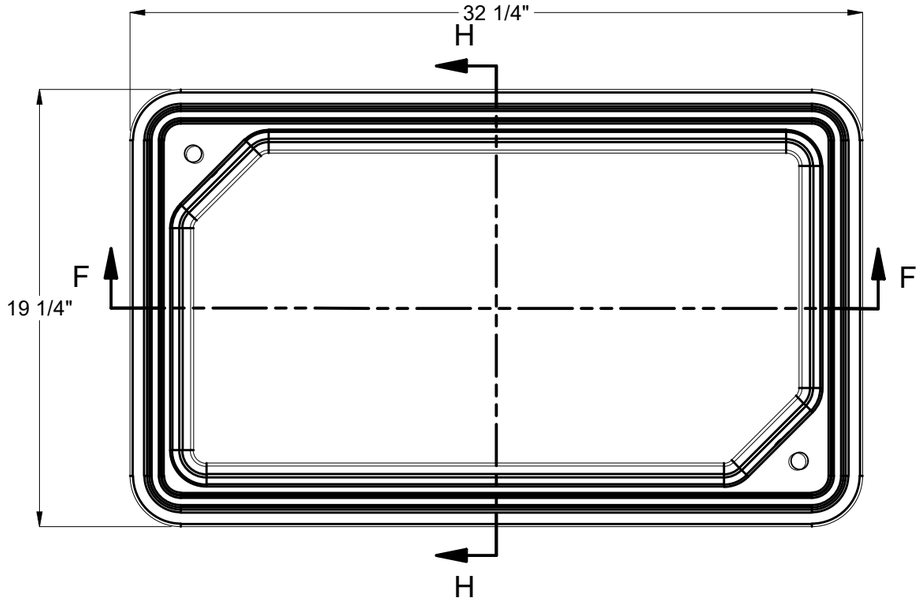

PLAN VIEW

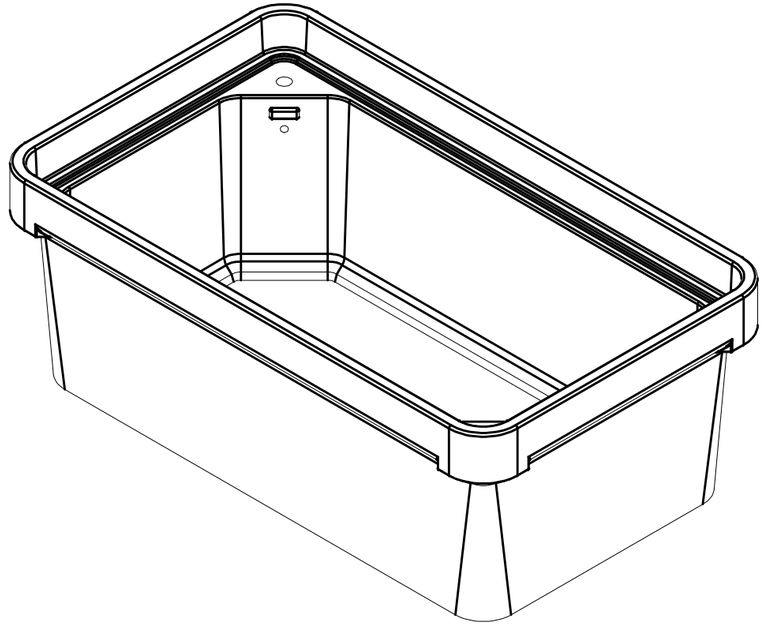

ISO VIEW

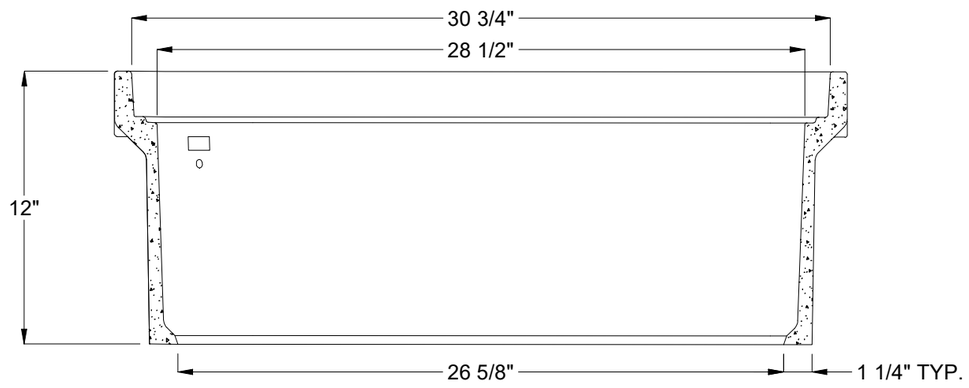

SECTION F-F

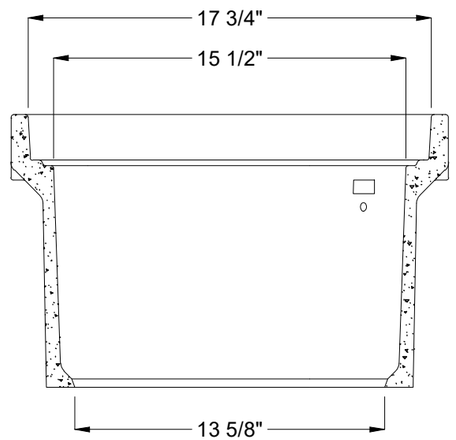

SECTION H-H

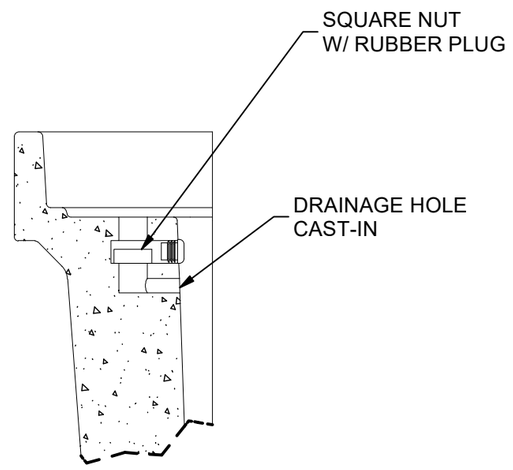

DETAIL CORNER RECESS

DESIGN SPEC: ANSI/SCTE-77	APPROX. WEIGHT: 65.23 lbs	JENSEN PRECAST EST. 1968	©2023 Jensen Precast- All rights reserved. Unless expressly authorized by Jensen Precast any use or duplication is strictly prohibited under penalty of civil action or codes.
AGENCY:	DESIGN/TEST LOAD: 22.5/33.75 kip		
AGENCY SPEC:	LOADING SPEC: Tier-22		

DESCRIPTION: HPC 1730x12 Polymer Box 1/2-13 SS Nut V0				REV: B-2
PART #: 200018030		DRAWN BY: M. Baumann		SHEET: 2 OF 10
CREATED: 3/11/2019		MODIFIED: 6/20/2023		

CaltransSubmittalPackage.idw

DESIGN NOTES
PART NUMBER AND LOAD RATING TO BE STENCILED UNDER LID AND ON INSIDE AND OUTSIDE OF BOX

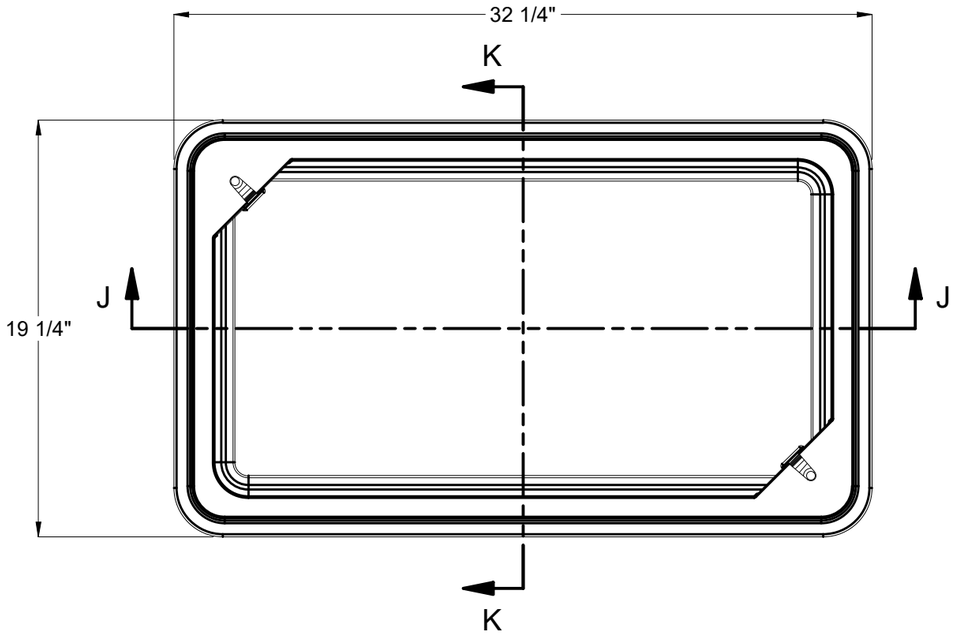

PLAN VIEW

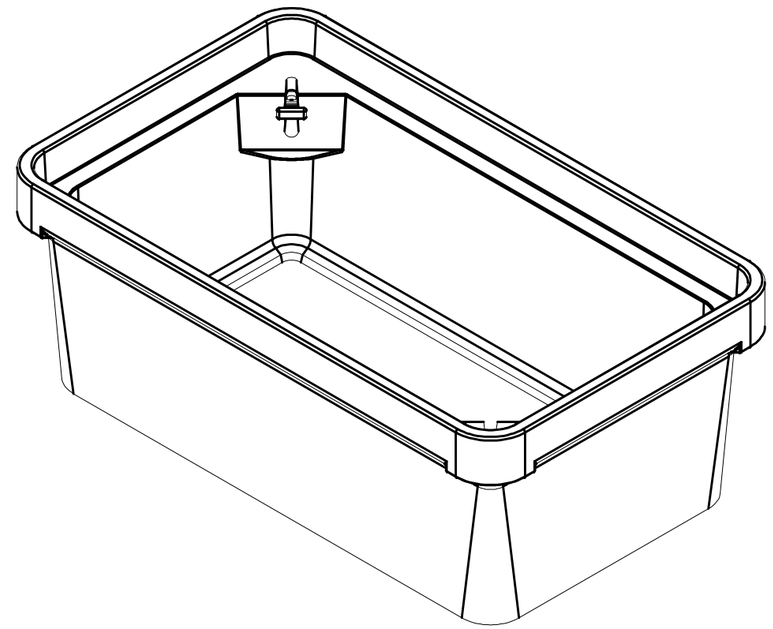

ISO VIEW

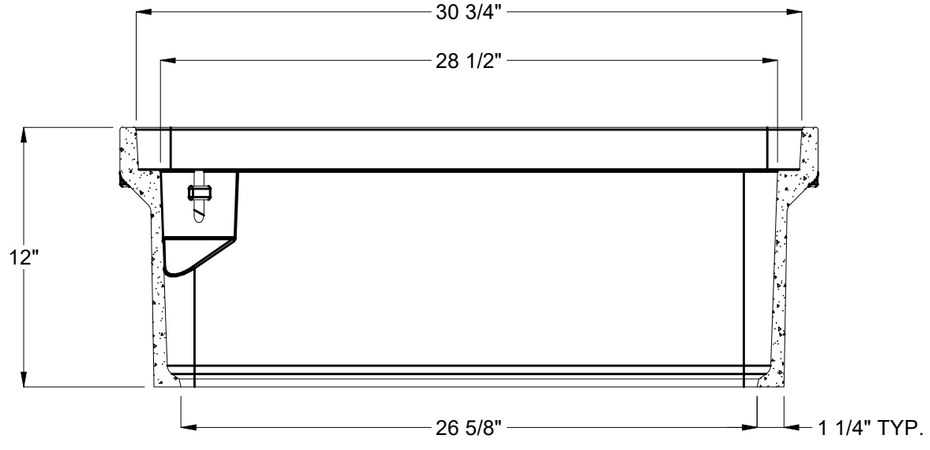

SECTION J-J

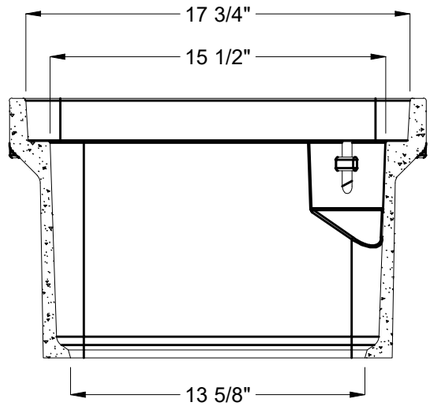

SECTION K-K

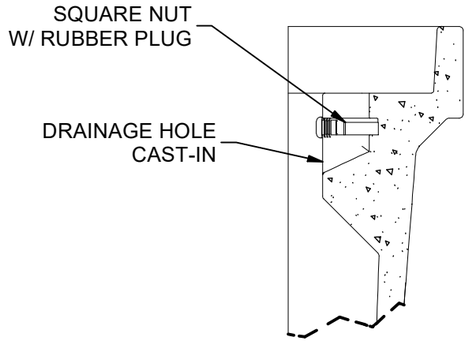

DETAIL CORNER RECESS

DESIGN SPEC: ANSI/SCTE-77	APPROX. WEIGHT: 60.1 lbs	JENSEN PRECAST EST. 1968	©2023 Jensen Precast- All rights reserved. Unless expressly authorized by Jensen Precast any use or duplication is strictly prohibited under penalty of civil action or codes.	DESCRIPTION: HPC 1730x12 Polymer Box 1/2-13 SS Nut V1	REV: A-4
AGENCY:	DESIGN/TEST LOAD: 22.5/33.75 kip			PART #: 200016534 / DRAWN BY: M. Baumann	SHEET: 3 OF 10
AGENCY SPEC:	LOADING SPEC: Tier-22			CREATED: 2/20/2019 / MODIFIED: 6/20/2023	

CaltransSubmittalPackage.idw

DESIGN NOTES
PART NUMBER AND LOAD RATING TO BE STENCILED UNDER LID AND ON INSIDE AND OUTSIDE OF BOX

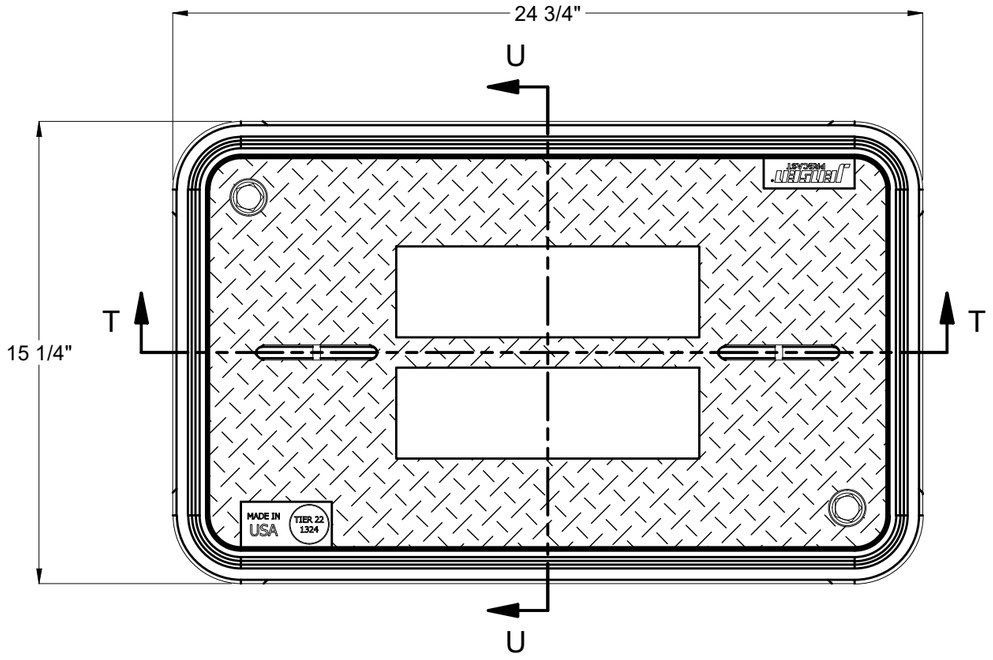

PLAN VIEW

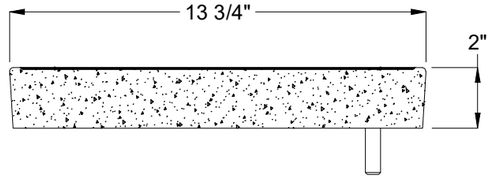

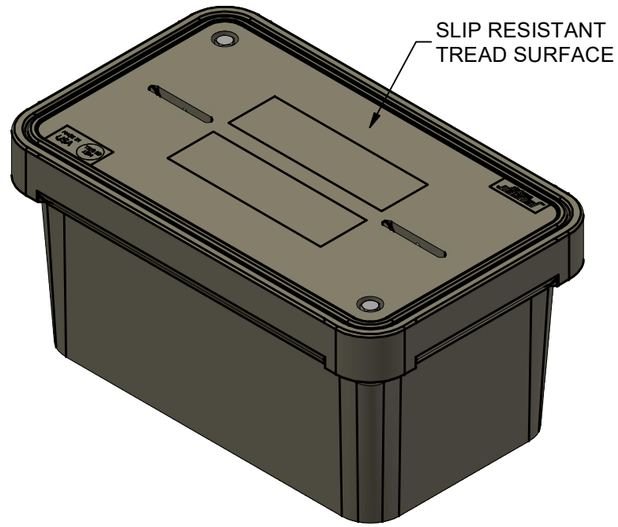

ISO VIEW

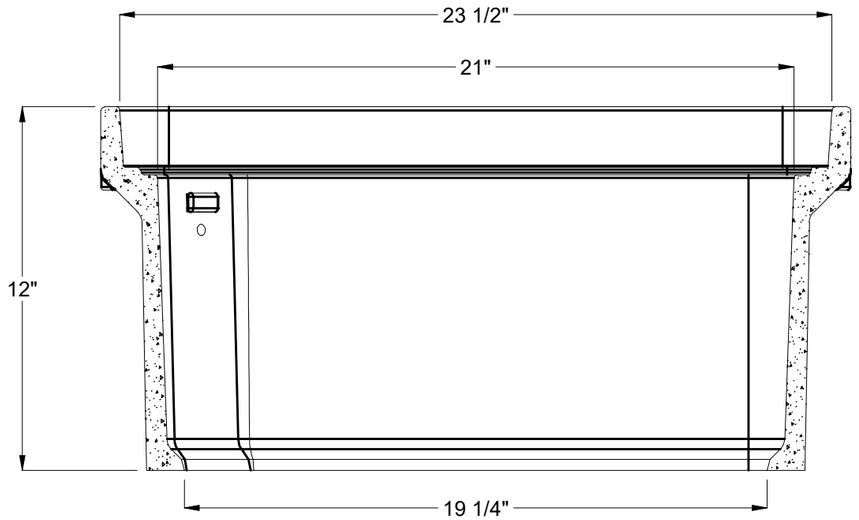

SECTION T-T

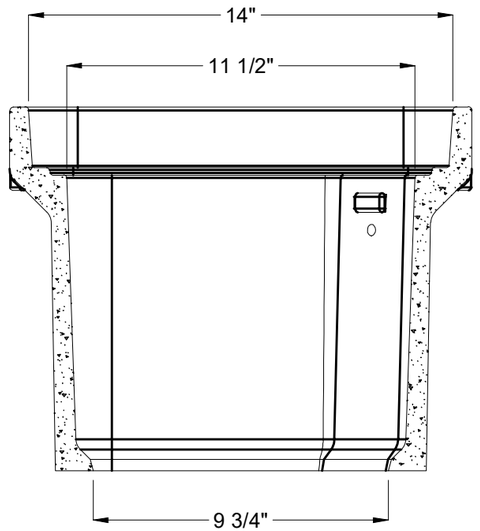

SECTION U-U

DESIGN SPEC: ANSI/SCTE-77	APPROX. WEIGHT: 90.52 lbs	JENSEN PRECAST EST. 1968	©2023 Jensen Precast- All rights reserved. Unless expressly authorized by Jensen Precast any use or duplication is strictly prohibited under penalty of civil action or codes.	DESCRIPTION: HPC 1324x12 Polymer Assembly 1/2-13 SS Penta Caltrans-Ex V0	REV:
AGENCY:	DESIGN/TEST LOAD: 22.5/33.75 kip			PART #: 200076282 / DRAWN BY: M. Baumann	SHEET: 4 OF 10
AGENCY SPEC:	LOADING SPEC: Tier-22			CREATED: 6/7/2023 / MODIFIED: 6/20/2023	

CaltransSubmittalPackage.idw

DESIGN NOTES
PART NUMBER AND LOAD RATING TO BE STENCILED UNDER LID AND ON INSIDE AND OUTSIDE OF BOX

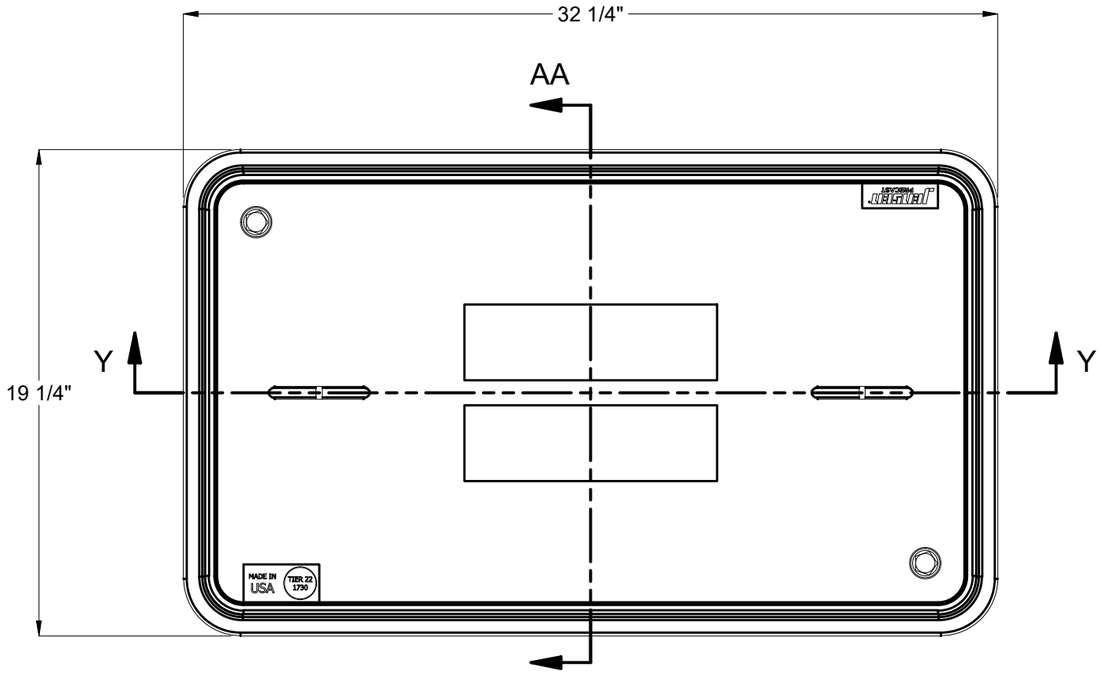

PLAN VIEW

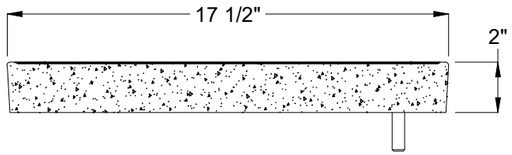

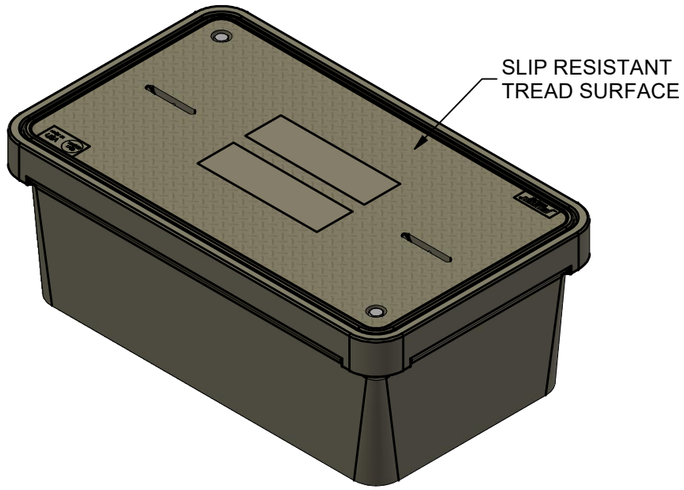

ISO VIEW

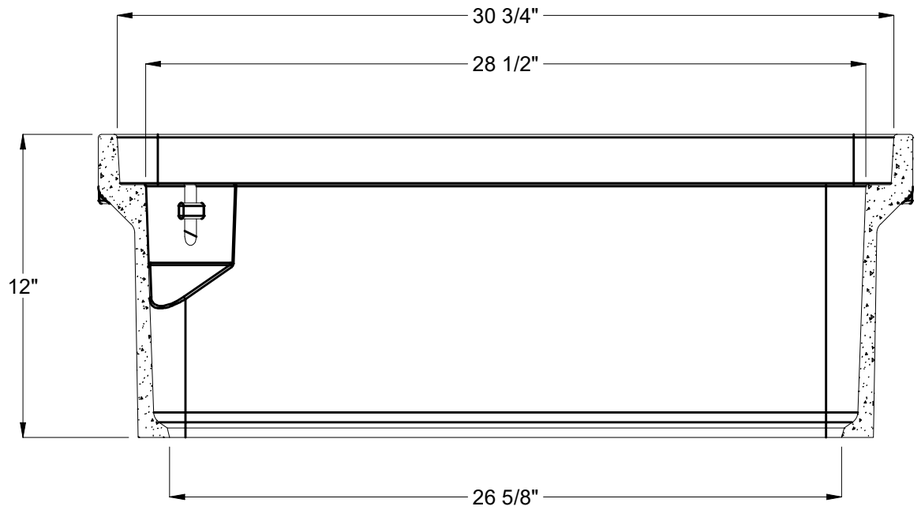

SECTION Y-Y

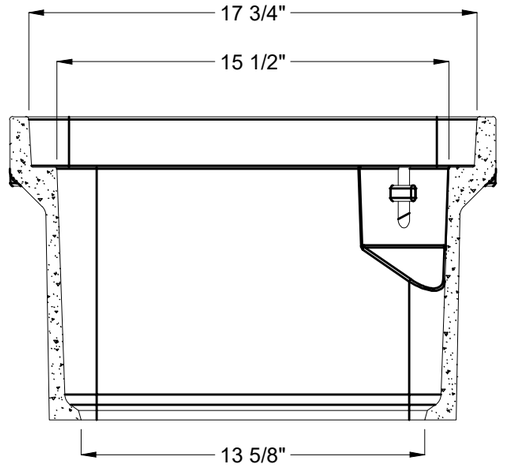

SECTION AA-AA

DESIGN SPEC: ANSI/SCTE-77	APPROX. WEIGHT: 132.42 lbs	JENSEN PRECAST EST. 1968	©2023 Jensen Precast- All rights reserved. Unless expressly authorized by Jensen Precast any use or duplication is strictly prohibited under penalty of civil action or codes.	DESCRIPTION: HPC 1730x12 Polymer Assembly 1/2-13 SS Penta Caltrans-Ex V1	REV:
AGENCY:	DESIGN/TEST LOAD: 22.5/33.75 kip				SHEET: 5 OF 10
AGENCY SPEC:	LOADING SPEC: Tier-22			PART #: 200076367 / DRAWN BY: M. Baumann / CREATED: 6/8/2023 / MODIFIED: 6/20/2023	

CaltransSubmittalPackage.idw

DESIGN NOTES
PART NUMBER AND LOAD RATING TO BE STENCILED UNDER LID AND ON INSIDE AND OUTSIDE OF BOX
NO EXPOSED OR LOOSE FIBERS ON COVERS

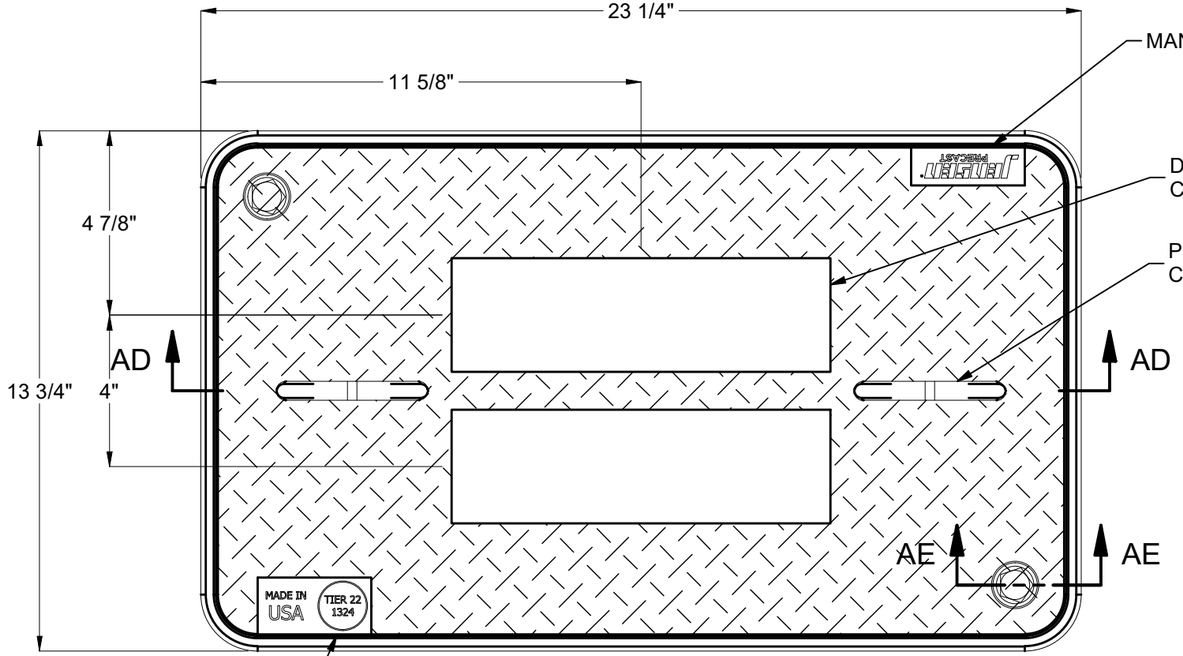

PLAN VIEW

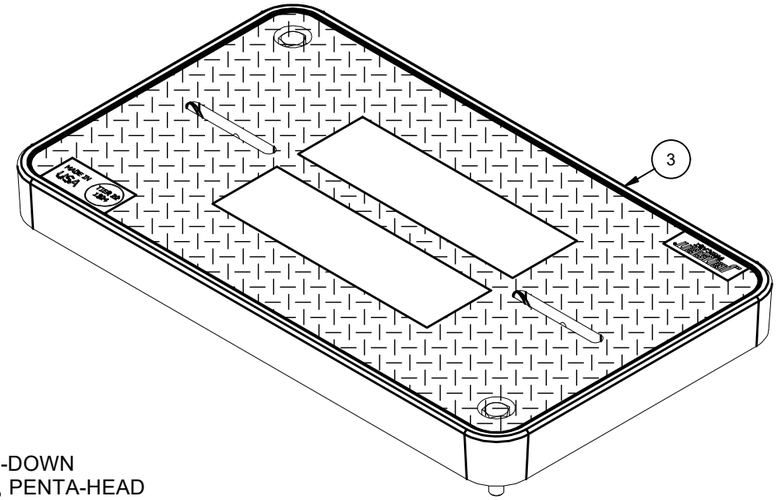

ISO VIEW

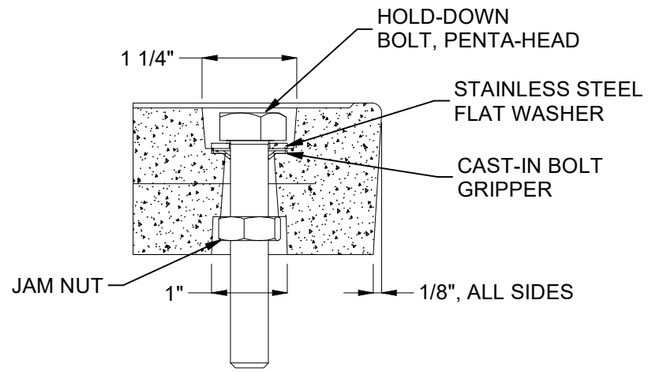

SECTION AE-AE
BOLT-DOWN RECESS DETAIL, TYP.

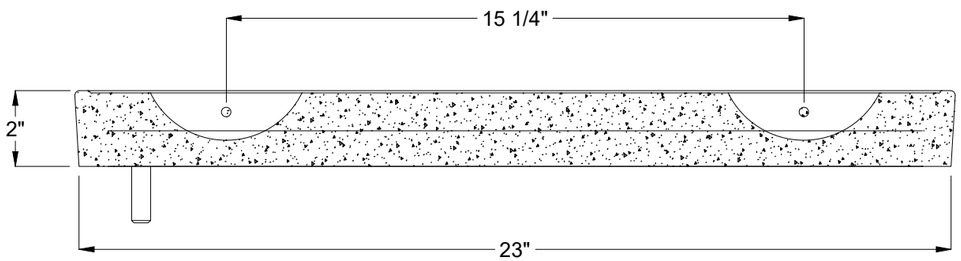

SECTION AD-AD

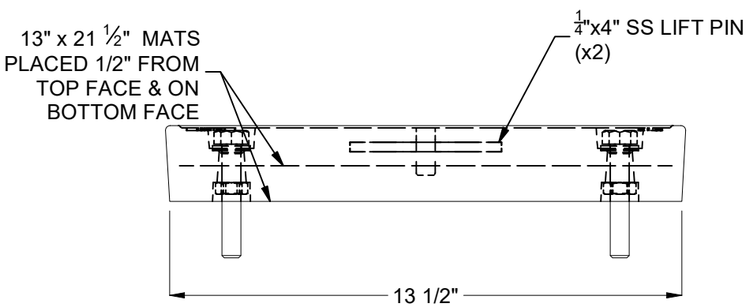

DESIGN SPEC: ANSI/SCTE-77	APPROX. WEIGHT: 43.18 lbs	JENSEN PRECAST EST. 1968	©2023 Jensen Precast- All rights reserved. Unless expressly authorized by Jensen Precast any use or duplication is strictly prohibited under penalty of civil action or codes.	DESCRIPTION: HPC 1324x2 Polymer Cover Bolt Down Caltrans Ex	REV:
AGENCY:	DESIGN/TEST LOAD: 22.5/33.75 kip			PART #: 200076018 / DRAWN BY: M. Baumann	SHEET: 6 OF 10
AGENCY SPEC:	LOADING SPEC: Tier-22			CREATED: 2/19/2019 / MODIFIED: 6/20/2023	

CaltransSubmittalPackage.idw

DESIGN NOTES
PART NUMBER AND LOAD RATING TO BE STENCILED UNDER LID AND ON INSIDE AND OUTSIDE OF BOX

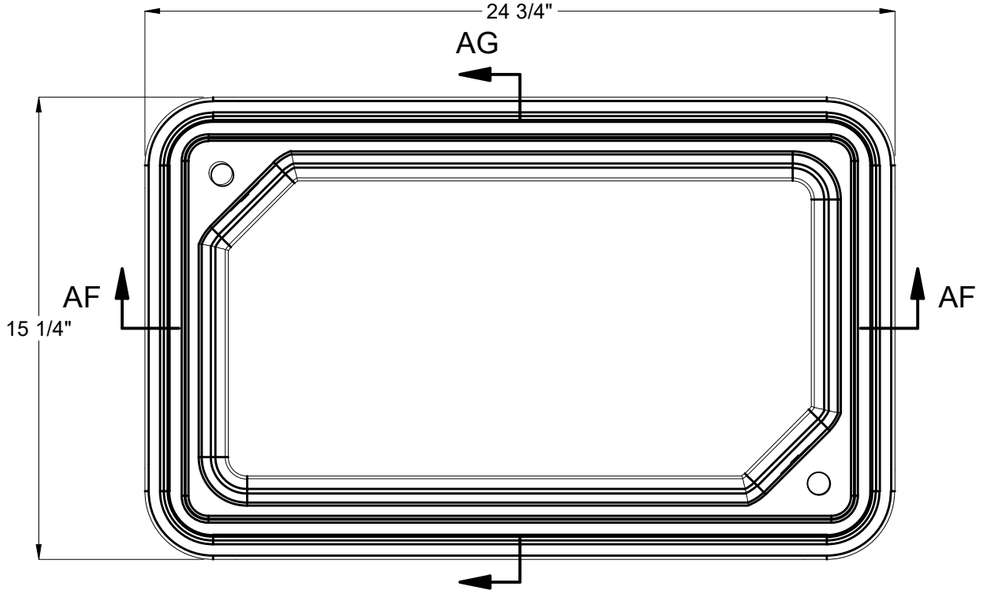

PLAN VIEW

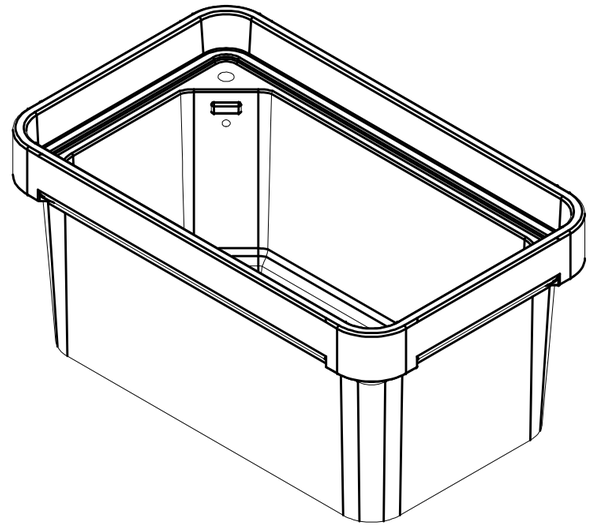

ISO VIEW

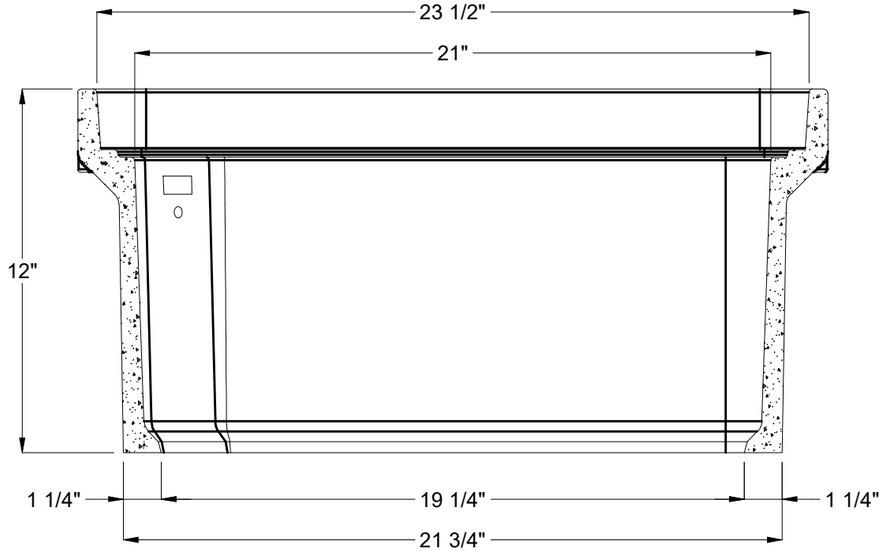

SECTION AF-AF

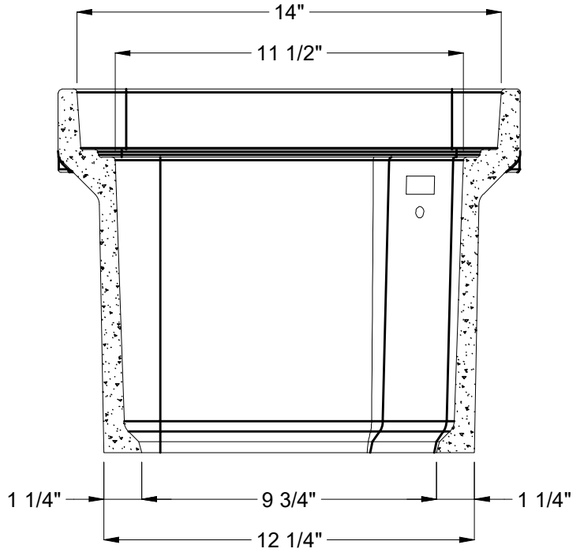

SECTION AG-AG

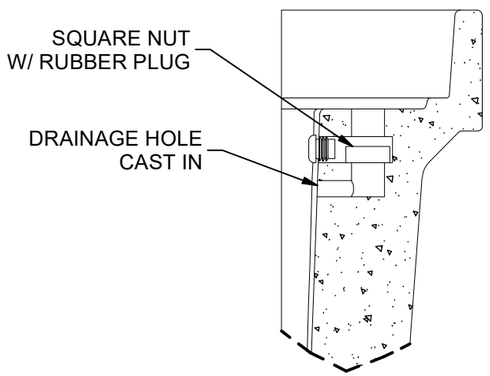

DETAIL CORNER RECESS

DESIGN SPEC: ANSI/SCTE-77	APPROX. WEIGHT: 47.35 lbs	JENSEN PRECAST EST. 1968	©2023 Jensen Precast- All rights reserved. Unless expressly authorized by Jensen Precast any use or duplication is strictly prohibited under penalty of civil action or codes.
AGENCY:	DESIGN/TEST LOAD: 22.5/33.75 kip		
AGENCY SPEC:	LOADING SPEC: Tier-22		

DESCRIPTION: HPC 1324x12 Polymer Box 1/2-13 SS Nut V0				REV: D-2
PART #: 100026322		DRAWN BY: M. Baumann		SHEET: 7 OF 10
CREATED: 3/11/2019		MODIFIED: 6/20/2023		

CaltransSubmittalPackage.idw

DESIGN NOTES
PART NUMBER AND LOAD RATING TO BE STENCILED UNDER LID AND ON INSIDE AND OUTSIDE OF BOX

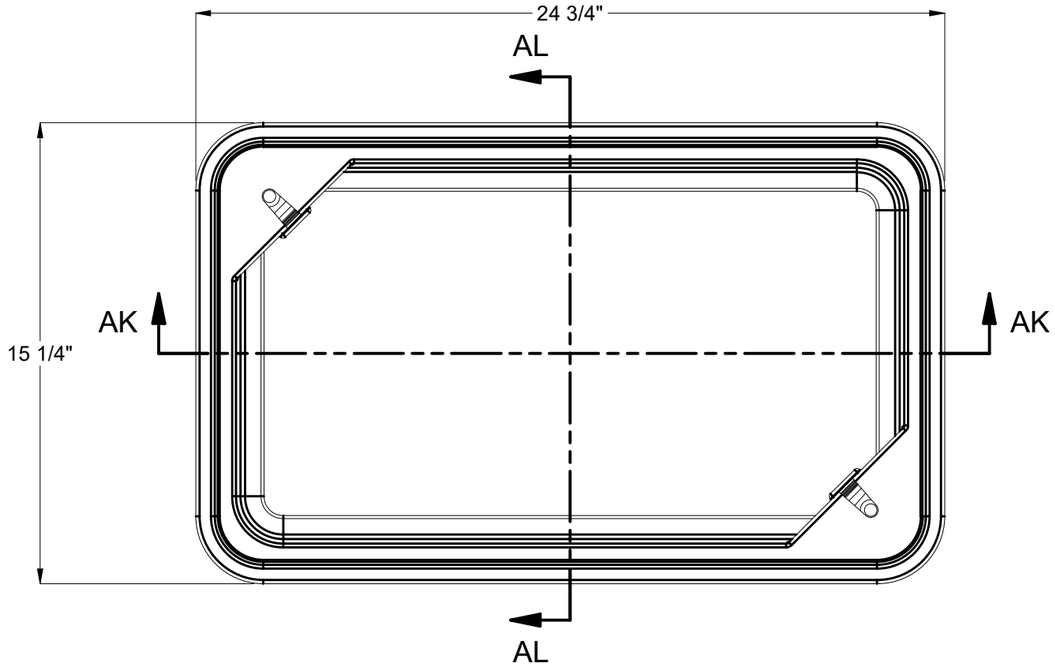

PLAN VIEW

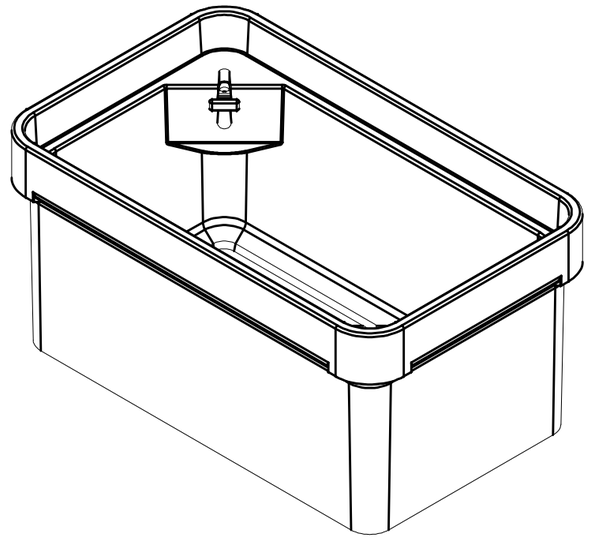

ISO VIEW

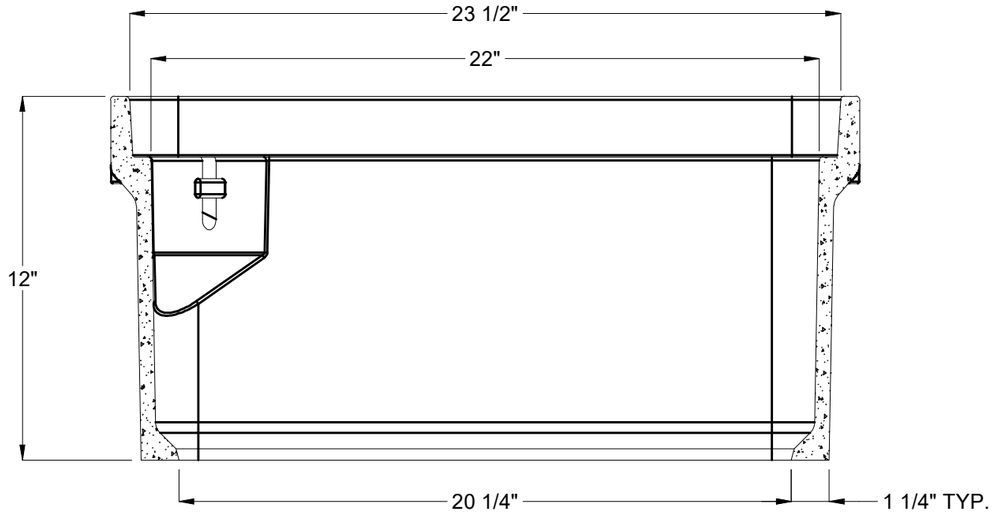

SECTION AK-AK

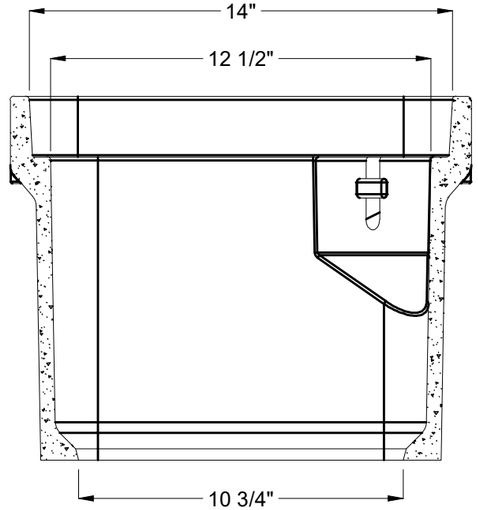

SECTION AL-AL

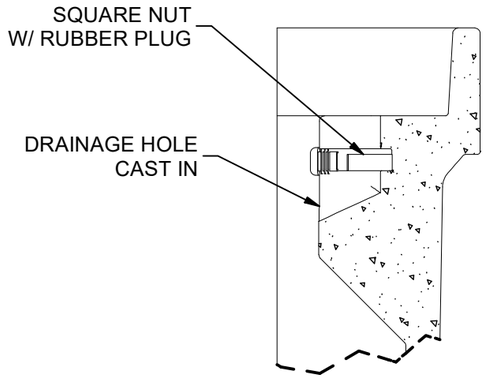

DETAIL AN

DESIGN SPEC: ANSI/SCTE-77	APPROX. WEIGHT: 42.14 lbs	JENSEN PRECAST EST. 1968	©2023 Jensen Precast- All rights reserved. Unless expressly authorized by Jensen Precast any use or duplication is strictly prohibited under penalty of civil action or codes.	DESCRIPTION: HPC 1324x12 Polymer Box 1/2-13 SS Nut V1	REV: A-2
AGENCY:	DESIGN/TEST LOAD: 22.5/33.75 kip			PART #: 200016531 / DRAWN BY: M. Baumann	SHEET: 8 OF 10
AGENCY SPEC:	LOADING SPEC: Tier-22			CREATED: 2/20/2019 / MODIFIED: 6/20/2023	

CaltransSubmittalPackage.idw

DESIGN NOTES
PART NUMBER AND LOAD RATING TO BE STENCILED UNDER LID AND ON INSIDE AND OUTSIDE OF BOX

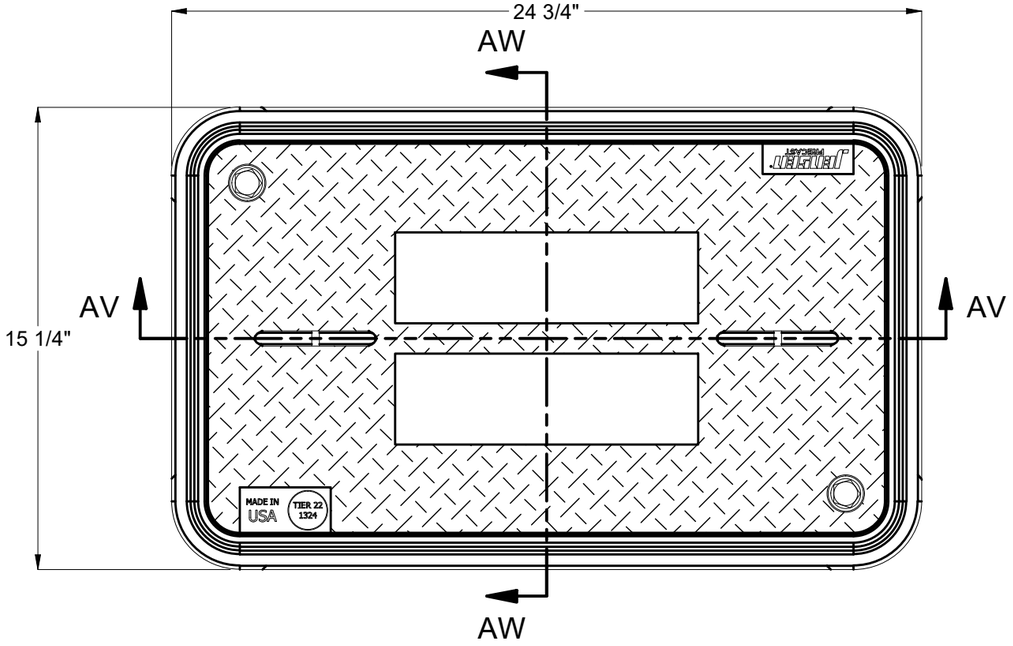

PLAN VIEW

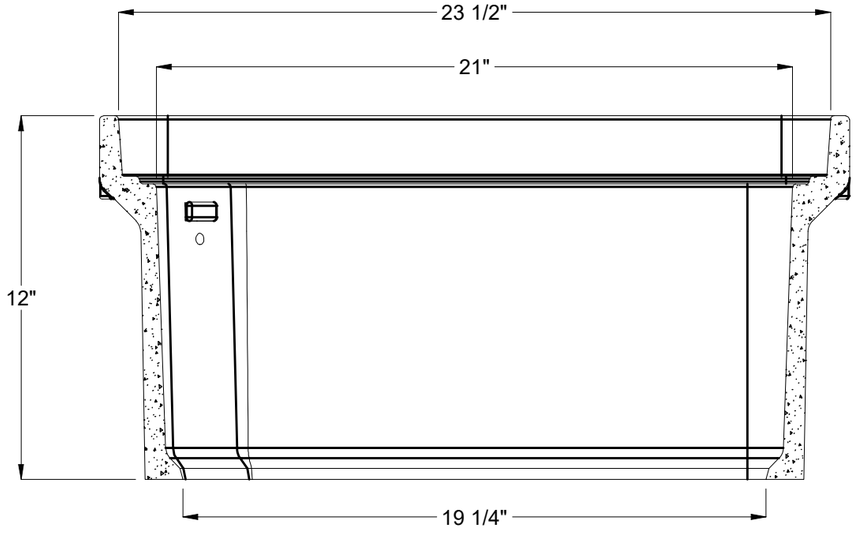

SECTION AV-AV

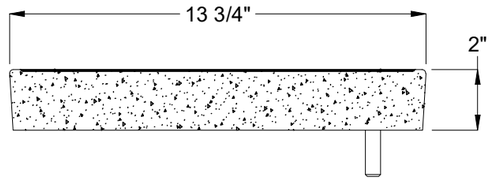

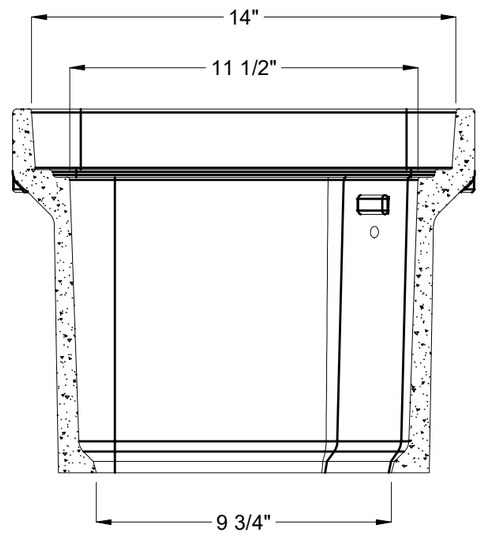

SECTION AW-AW

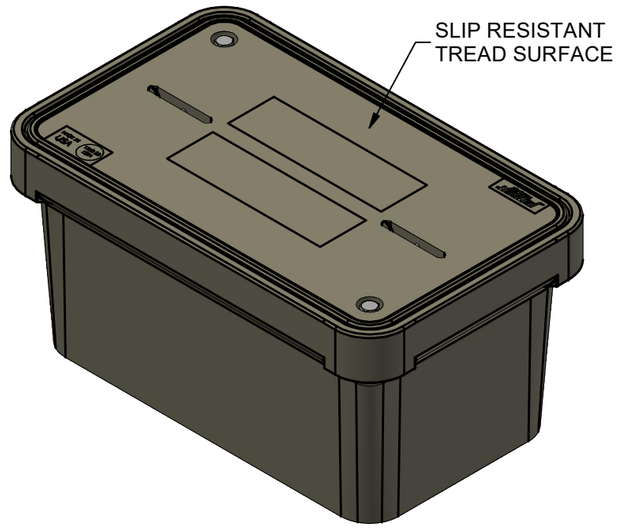

ISO VIEW

DESIGN SPEC: ANSI/SCTE-77	APPROX. WEIGHT: 90.52 lbs		
AGENCY:	DESIGN/TEST LOAD: 22.5/33.75 kip		
AGENCY SPEC:	LOADING SPEC: Tier-22		

JENSEN PRECAST EST. 1968

©2023 Jensen Precast- All rights reserved.
Unless expressly authorized by Jensen Precast any use or duplication is strictly prohibited under penalty of civil action or codes.

DESCRIPTION: HPC 1324x12 Polymer Assembly 1/2-13 SS Penta Caltrans-Ex V0			REV:
PART #: 200076282		DRAWN BY: M. Baumann	SHEET: 9 OF 10
CREATED: 6/7/2023		MODIFIED: 6/20/2023	

CaltransSubmittalPackage.idw

DESIGN NOTES
PART NUMBER AND LOAD RATING TO BE STENCILED UNDER LID AND ON INSIDE AND OUTSIDE OF BOX

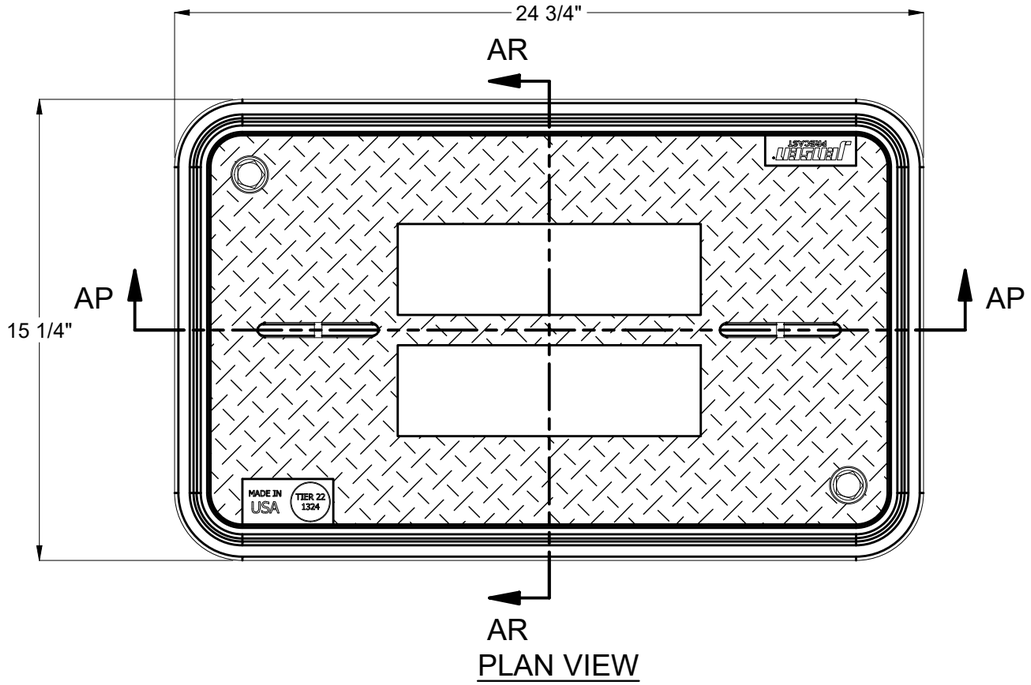

PLAN VIEW

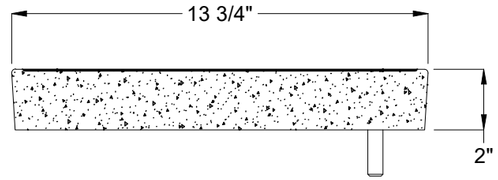

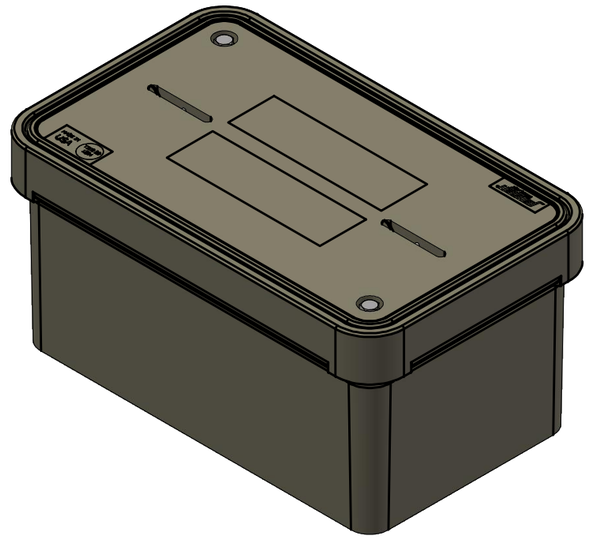

ISO VIEW

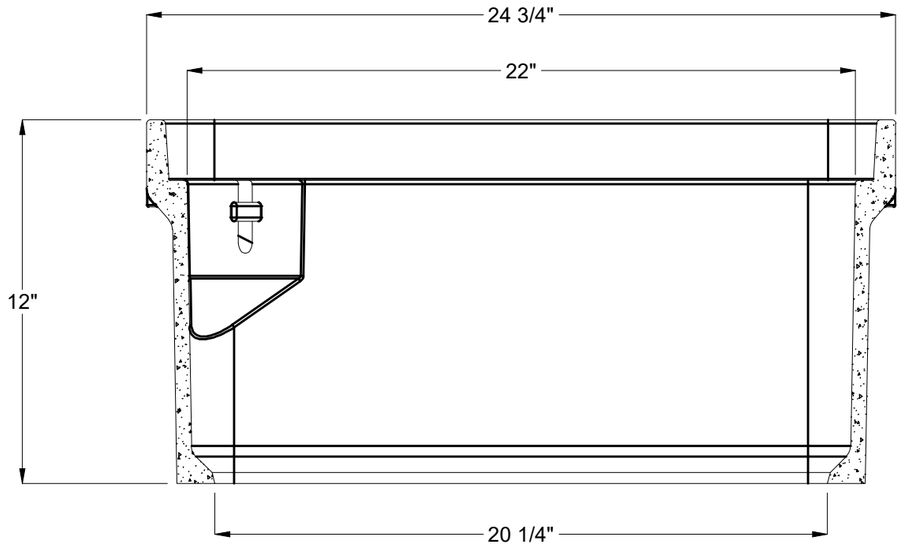

SECTION AP-AP

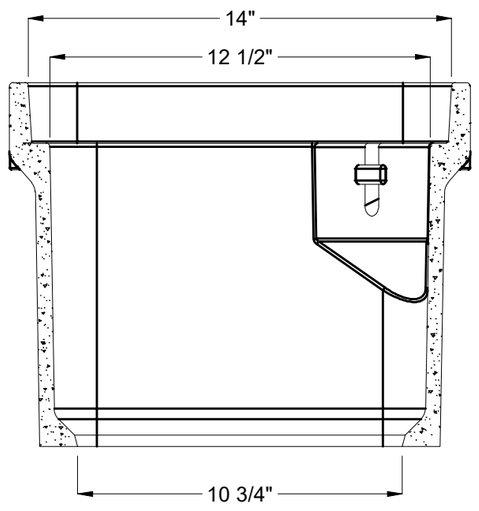

SECTION AR-AR

DESIGN SPEC: ANSI/SCTE-77	APPROX. WEIGHT: 85.32 lbs	JENSEN PRECAST EST. 1968	©2023 Jensen Precast- All rights reserved. Unless expressly authorized by Jensen Precast any use or duplication is strictly prohibited under penalty of civil action or codes.	DESCRIPTION: HPC 1324x12 Polymer Assembly 1/2-13 SS Penta Caltrans-Ex V1	REV:
AGENCY:	DESIGN/TEST LOAD: 22.5/33.75 kip				
AGENCY SPEC:	LOADING SPEC: Tier-22			PART #: 200076283 / DRAWN BY: M. Baumann / CREATED: 6/7/2023 / MODIFIED: 6/20/2023	SHEET: 10 OF 10

CaltransSubmittalPackage.idw