DESIGN NOTES
PART NUMBER AND LOAD RATING TO BE STENCILED UNDER LID AND ON INSIDE AND OUTSIDE OF BOX
NO EXPOSED OR LOOSE FIBERS ON COVERS

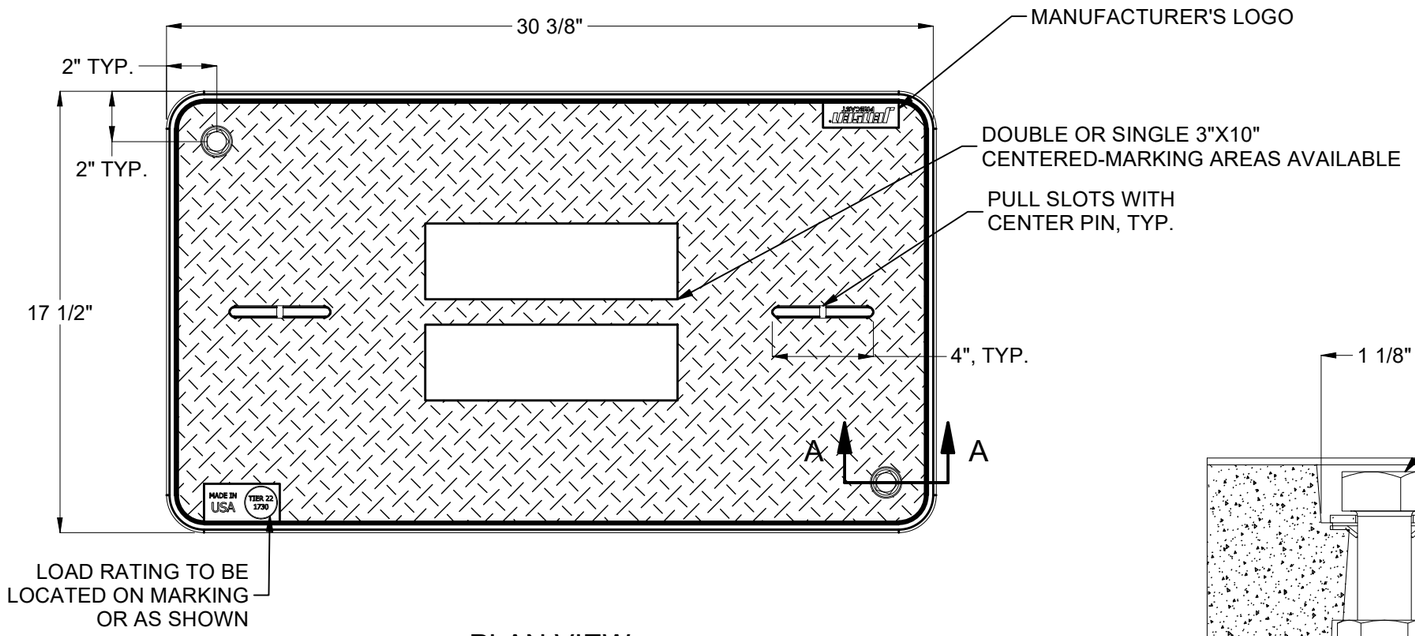

PLAN VIEW
1730 LID

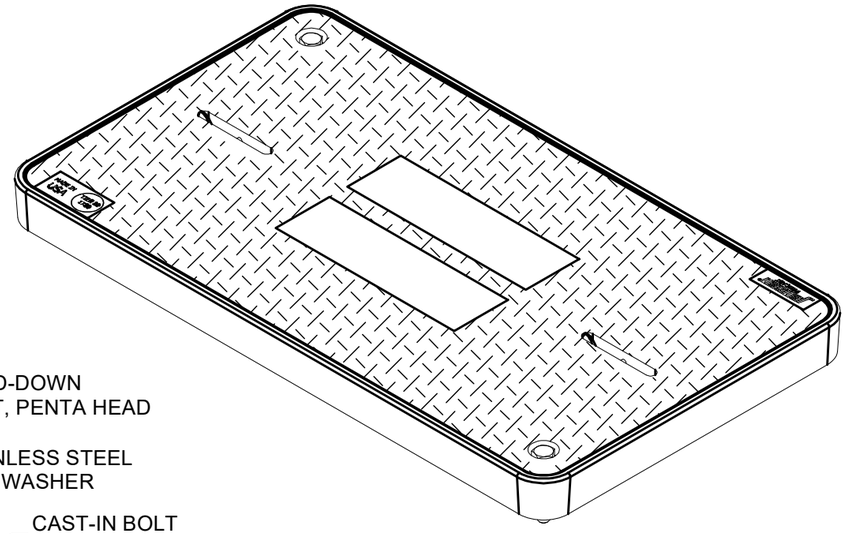

ISO VIEW, 1730

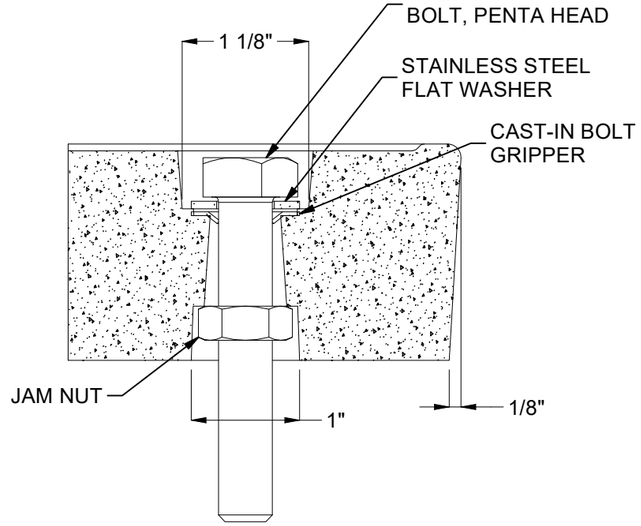

SECTION A-A
BOLT-DOWN RECESS DETAIL, TYP.

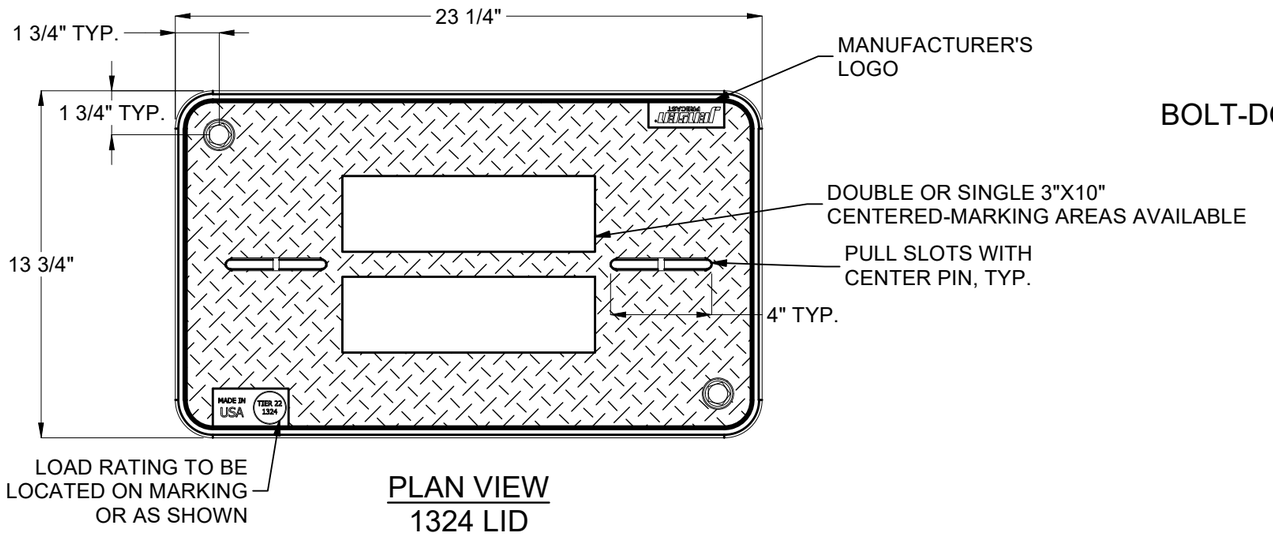

PLAN VIEW
1324 LID

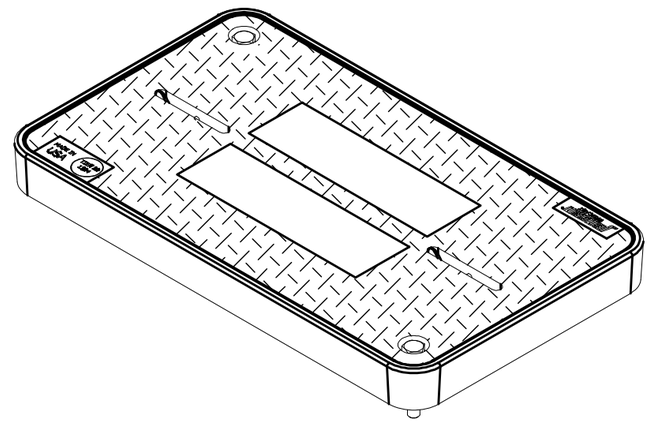

ISO VIEW, 1324

BURY DEPTH:	to		
WATER LEVEL:		APPROX. WEIGHT:	VARIES
DESIGN SPEC:	ANSI/SCTE-77	LOADING SPEC:	Tier-22
AGENCY:		AGENCY SPEC:	

JENSEN PRECAST EST. 1968
WWW.JENSENPRECAST.COM

©2023 Jensen Precast- All rights reserved.
All materials appearing as Jensen Precast documents and the like are proprietary work product and are protected under U.S. copyright and other laws.
Unless in conjunction with business conducted with Jensen Precast, any use of Jensen Precast work product without express, written consent is prohibited, and recipient is prohibited from distributing any and all work product to non-approved third parties under penalty of civil action.

DESCRIPTION:	HPC 1730 & 1324 POLYMER COVER BOLT DOWN, CALTRANS EXAMPLES		REV:
PART NUMBER:	MULTIPLE	DRAWN BY:	M. Baumann
CREATED:	2/19/2019	MODIFIED:	6/9/2023
			SHEET: 1 OF 3

CaltransEx_Submittal1.idw

DESIGN NOTES
PART NUMBER AND LOAD RATING TO BE STENCILED UNDER LID AND ON INSIDE AND OUTSIDE OF BOX

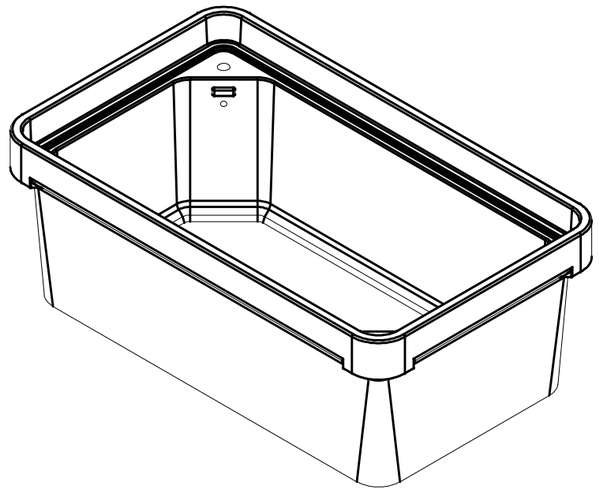

ISO VIEW
1730 BOX, TYPE 1 (V0)

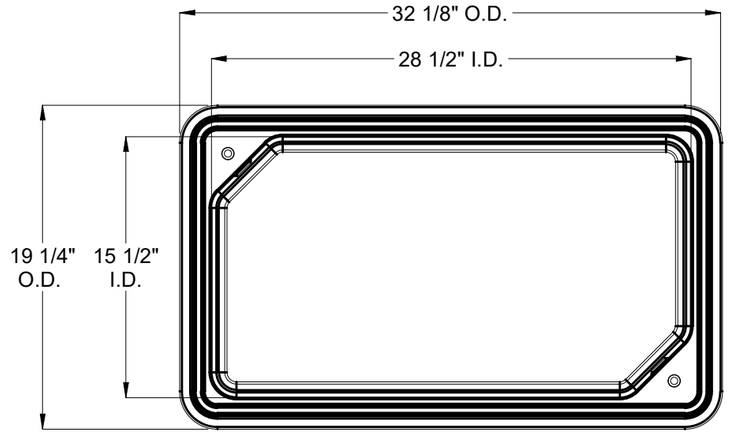

PLAN VIEW, TYPE 1

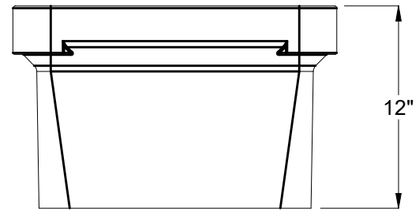

SIDE ELEVATION
TYPE 1

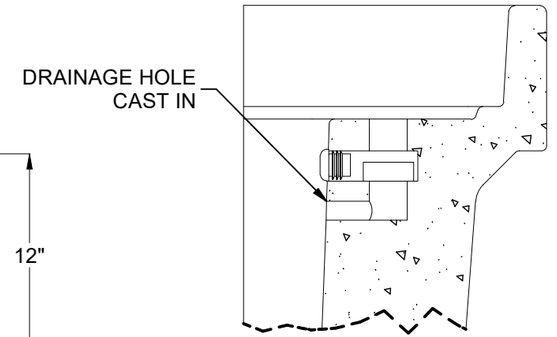

DETAIL BOX CORNER
TYPE 1

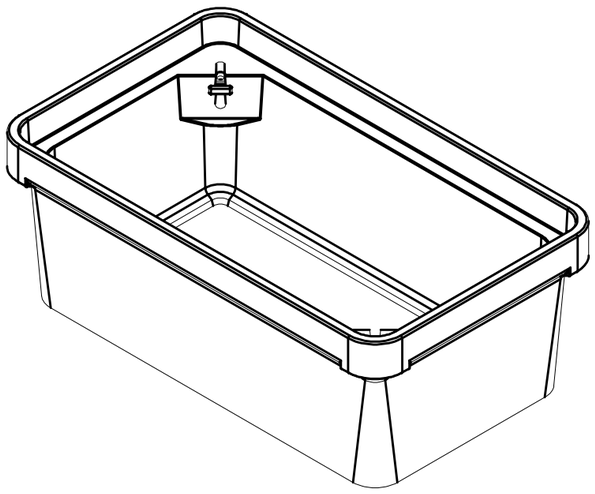

ISO VIEW
1730 BOX, TYPE 2

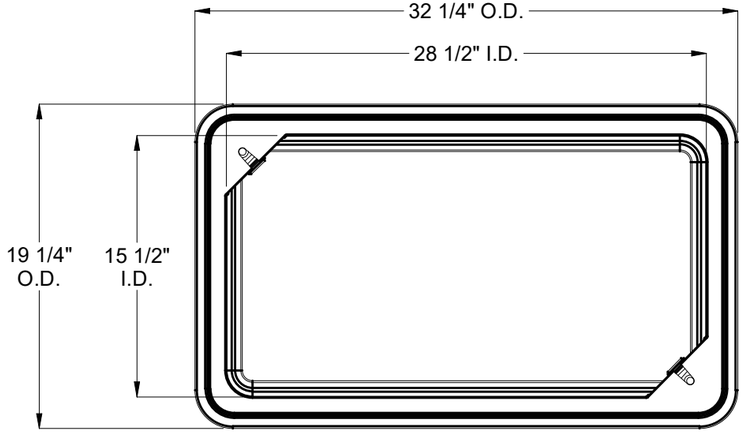

PLAN VIEW, TYPE 2

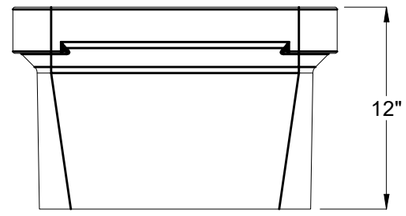

SIDE ELEVATION
TYPE 2

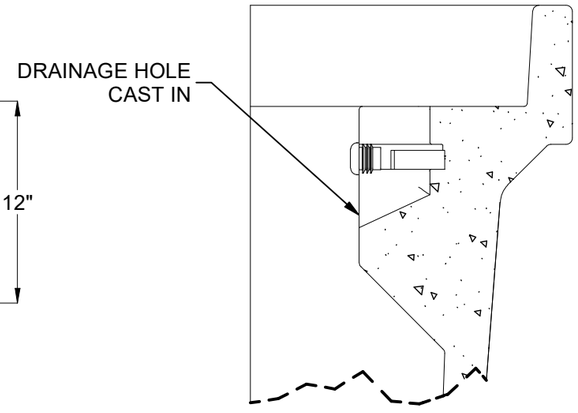

DETAIL BOX CORNER
TYPE 2

BURY DEPTH:	to		
WATER LEVEL:		APPROX. WEIGHT:	VARIES
DESIGN SPEC:	ANSI/SCTE-77	LOADING SPEC:	Tier-22
AGENCY:		AGENCY SPEC:	

JENSEN PRECAST EST. 1968

WWW.JENSENPRECAST.COM

©2023 Jensen Precast- All rights reserved.
All materials appearing as Jensen Precast documents and the like are proprietary work product and are protected under U.S. copyright and other laws.
Unless in conjunction with business conducted with Jensen Precast, any use of Jensen Precast work product without express, written consent is prohibited, and recipient is prohibited from distributing any and all work product to non-approved third parties under penalty of civil action.

DESCRIPTION:	HPC 1730x12 Polymer Box 1/2-13 SS Nut V1 BOX LAYOUT		REV: A-4
PART NUMBER:	MULTIPLE	DRAWN BY:	M. Baumann
CREATED:	2/20/2019	MODIFIED:	6/9/2023
			SHEET: 2 OF 3

CaltransEx_Submittal1.idw

DESIGN NOTES
PART NUMBER AND LOAD RATING TO BE STENCILED UNDER LID AND ON INSIDE AND OUTSIDE OF BOX

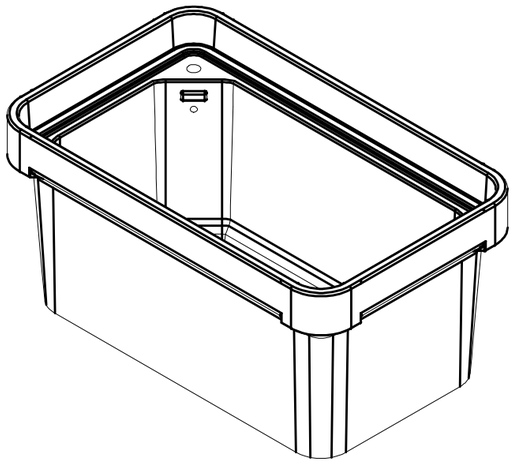

ISO VIEW
1324 BOX, TYPE 1 (V0)

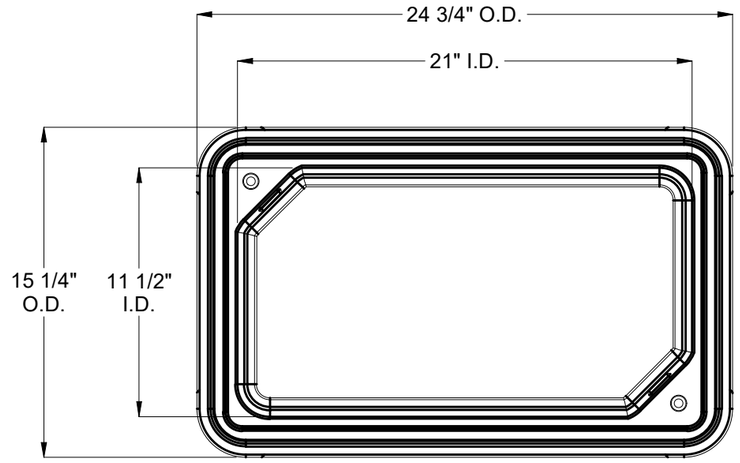

PLAN VIEW, TYPE 1

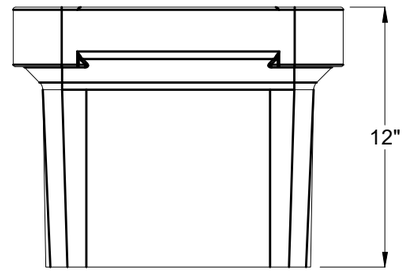

SIDE ELEVATION
TYPE 1

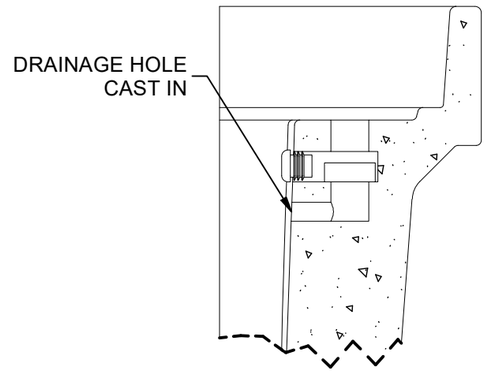

DETAIL BOX CORNER
TYPE 1

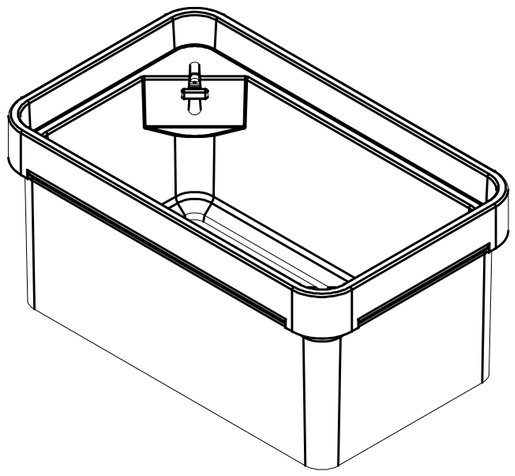

ISO VIEW
1324 BOX, TYPE 2

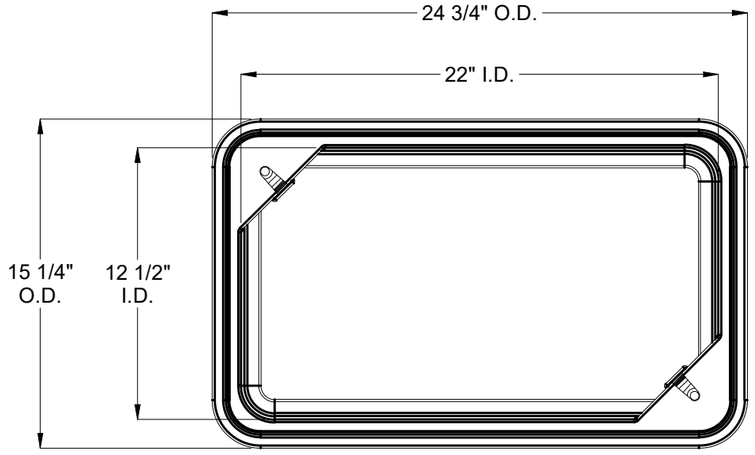

PLAN VIEW, TYPE 2

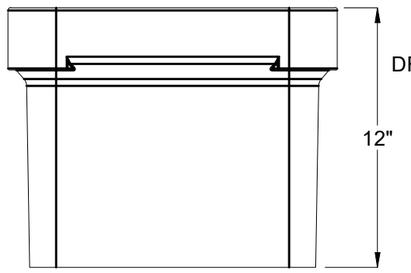

SIDE ELVATION
TYPE 2

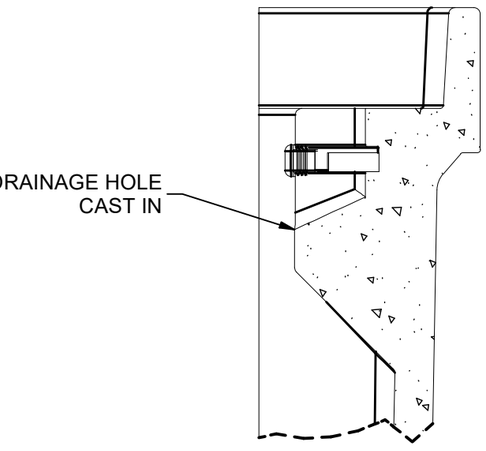

DETAIL BOX CORNER
TYPE 2

BURY DEPTH:	to		
WATER LEVEL:		APPROX. WEIGHT:	VARIES
DESIGN SPEC:	ANSI/SCTE-77	LOADING SPEC:	Tier-22
AGENCY:		AGENCY SPEC:	

JENSEN PRECAST EST. 1968

WWW.JENSENPRECAST.COM

©2023 Jensen Precast- All rights reserved.
All materials appearing as Jensen Precast documents and the like are proprietary work product and are protected under U.S. copyright and other laws.
Unless in conjunction with business conducted with Jensen Precast, any use of Jensen Precast work product without express, written consent is prohibited, and recipient is prohibited from distributing any and all work product to non-approved third parties under penalty of civil action.

DESCRIPTION:	HPC 1324x12 Polymer Box 1/2-13 SS Nut V0 BOX LAYOUT		REV: D-2
PART NUMBER:	MULTIPLE	DRAWN BY:	M. Baumann
CREATED:	3/11/2019	MODIFIED:	6/9/2023
			SHEET: 3 OF 3

CaltransEx_Submittal1.idw