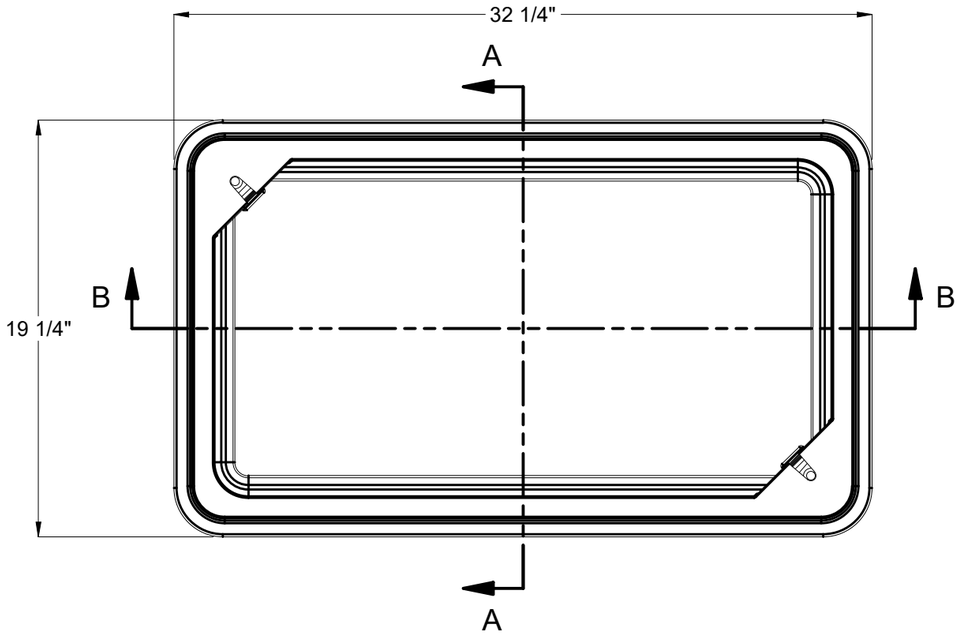

PLAN VIEW

BILL OF MATERIALS				
ITEM	UNIT QTY	QTY	PART NUMBER	DESCRIPTION
1	0.491 ft^3	0.491 ft^3	100035038	CONCRETE COMPOSITE BOX MIX BRUCE
2	1	2	100022548	HPC PLUGS 5/8X1-3/8-14-2 PE-LD67 BLK
3	1	2	100021840	SQUARE NUT 1/2-13 304SS

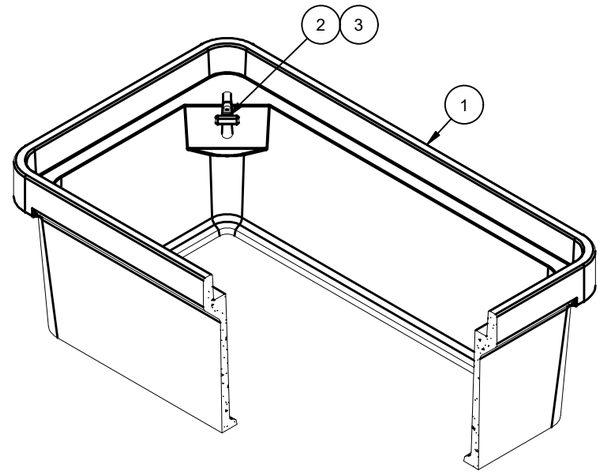

ISO BREAKOUT VIEW

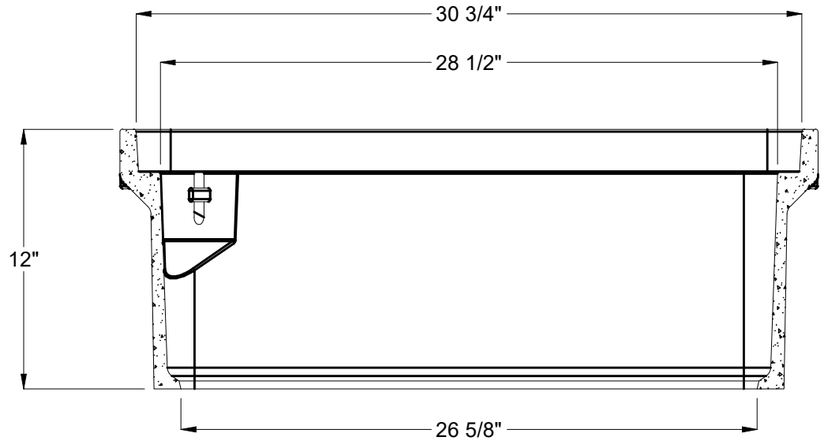

SECTION B-B

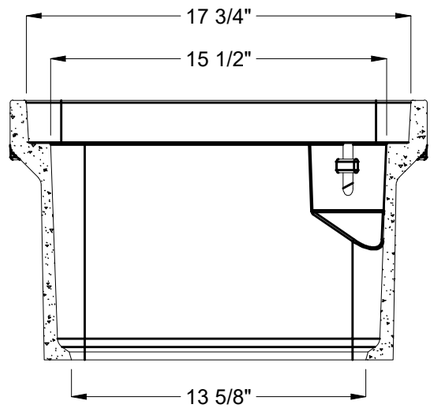

SECTION A-A

REVISION HISTORY			
REV	DESCRIPTION	DATE	BY
A	INITIAL RELEASE	6/21/23	M.B.

PALLET QUANTITY:	15	APPROX. WEIGHT:	SEE TABLE
CERTIFICATION:		DESIGN/TEST LOAD:	22.5/33.75 kip
DESIGN SPEC:	ANSI/SCTE-77	LOADING SPEC:	Tier-22
AGENCY:		AGENCY SPEC:	

JENSEN PRECAST EST. 1968

WWW.JENSENPRECAST.COM

©2018 Jensen Precast- All rights reserved.
All materials appearing as Jensen Precast documents and the like are proprietary work product and are protected under U.S. copyright and other laws.
Unless in conjunction with business conducted with Jensen Precast, any use of Jensen Precast work product without express, written consent is prohibited, and recipient is prohibited from distributing any and all work product to non-approved third parties under penalty of civil action.

DESCRIPTION:	HPC 1730x12 Polymer Box 1/2-13 SS Nut V1		REV: A-4
PART #:	200016534	DRAWN BY: M. Baumann	SHEET: 1 OF 1
CREATED:	2/20/2019	MODIFIED: 6/21/2023	

200016534.idw