DESIGN NOTES
PART NUMBER AND LOAD RATING TO BE STENCILED UNDER LID AND ON INSIDE AND OUTSIDE OF BOX

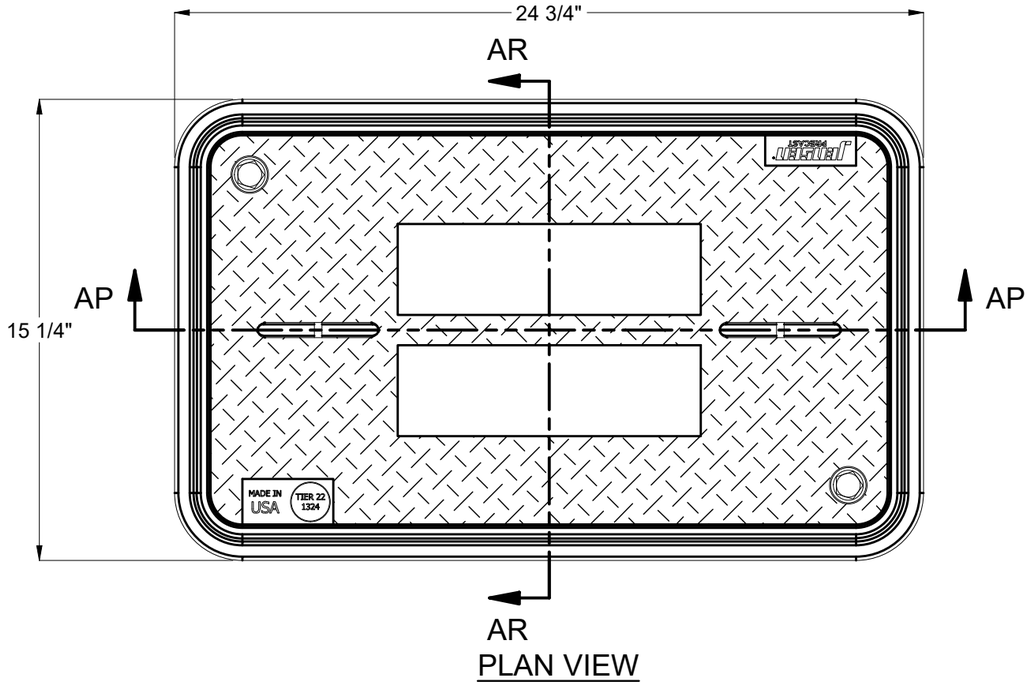

PLAN VIEW

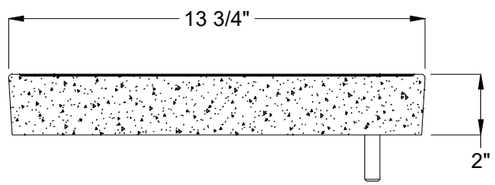

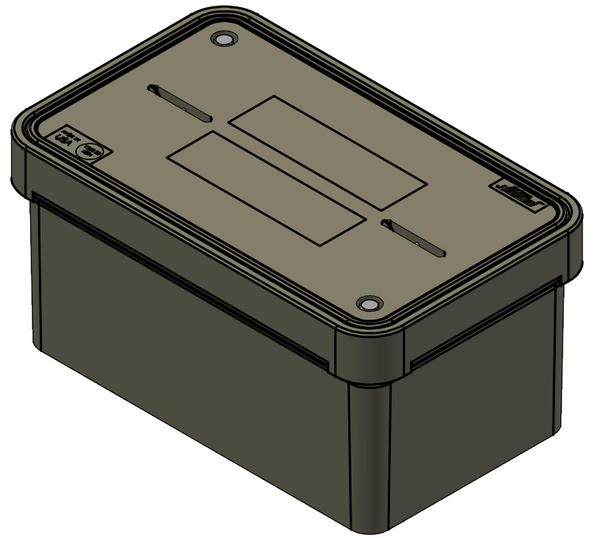

ISO VIEW

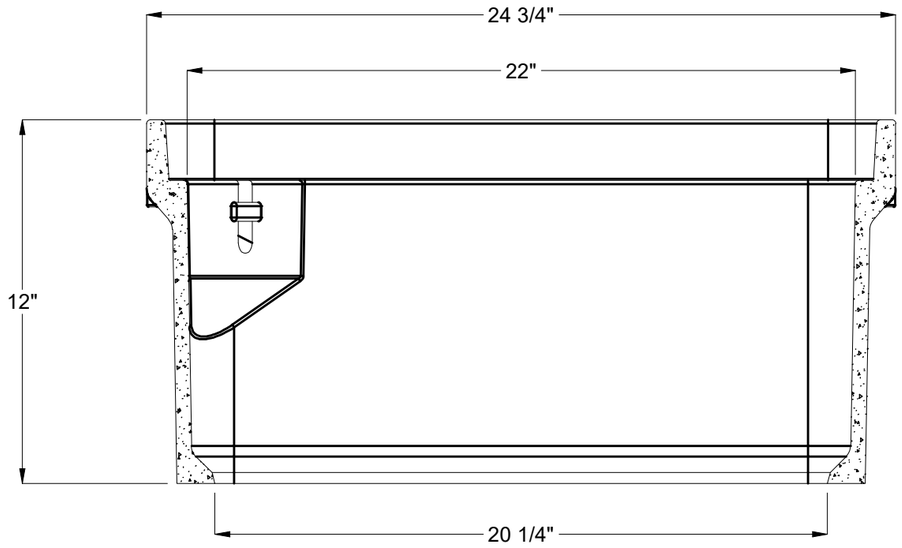

SECTION AP-AP

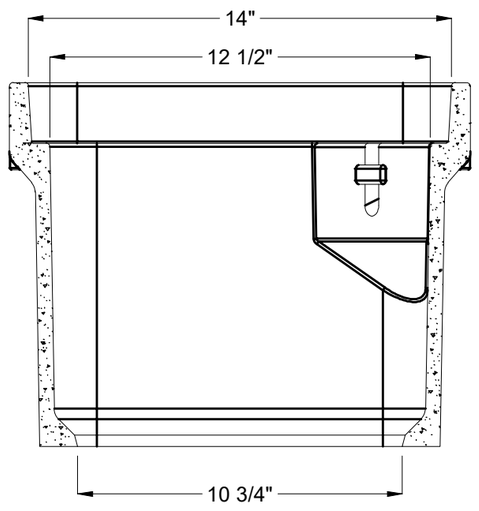

SECTION AR-AR

DESIGN SPEC: ANSI/SCTE-77	APPROX. WEIGHT: 85.32 lbs	JENSEN PRECAST EST. 1968	DESCRIPTION: HPC 1324x12 Polymer Assembly 1/2-13 SS Penta Caltrans-Ex V1
AGENCY:	DESIGN/TEST LOAD: 22.5/33.75 kip		REV:
AGENCY SPEC:	LOADING SPEC: Tier-22		SHEET: 1 OF 3

©2023 Jensen Precast- All rights reserved.
Unless expressly authorized by Jensen Precast any use or duplication is strictly prohibited under penalty of civil action or codes.

PART #:	200076283	DRAWN BY:	M. Baumann
CREATED:	6/7/2023	MODIFIED:	6/21/2023

CaltransSubmittalPackage_1324V1.idw

DESIGN NOTES
PART NUMBER AND LOAD RATING TO BE STENCILED UNDER LID AND ON INSIDE AND OUTSIDE OF BOX
NO EXPOSED OR LOOSE FIBERS ON COVERS

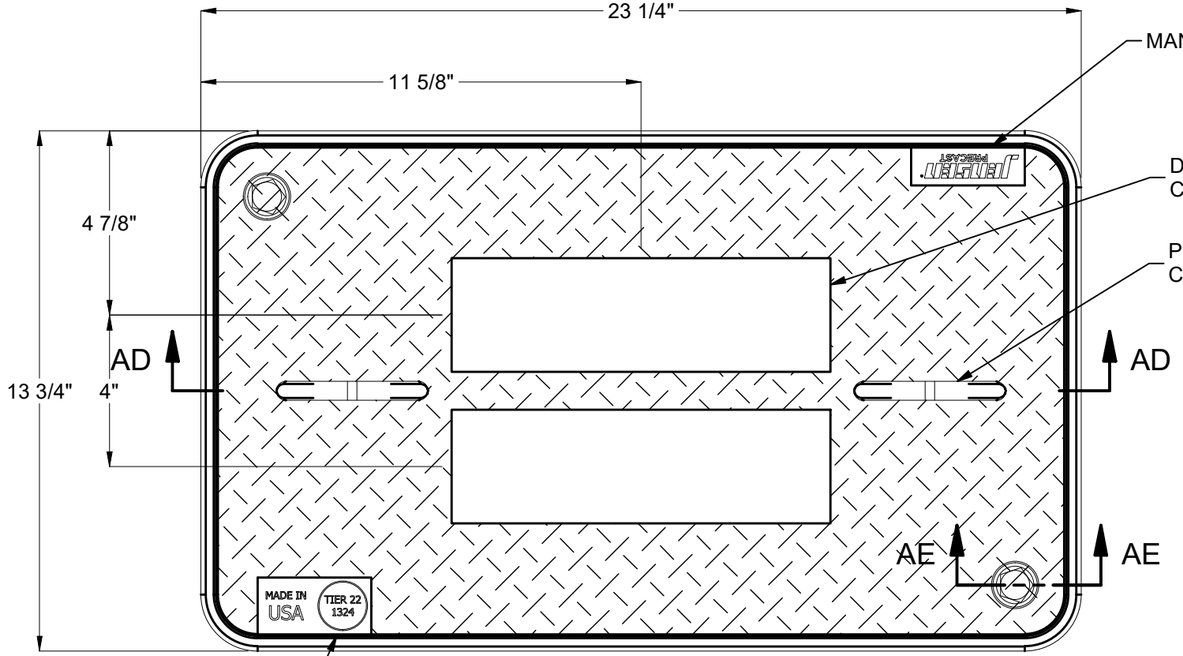

PLAN VIEW

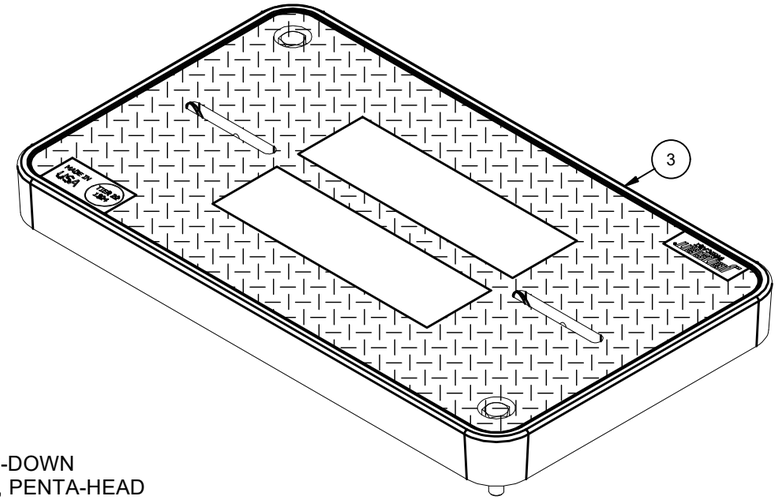

ISO VIEW

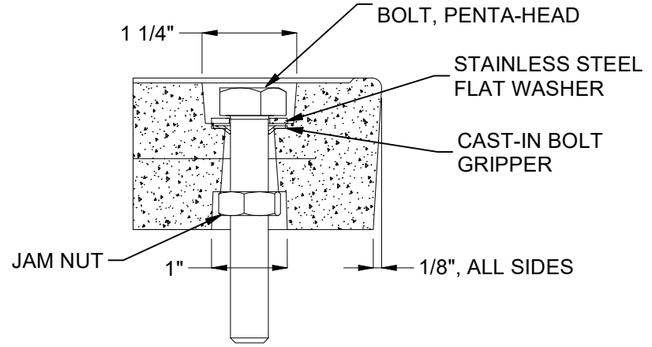

SECTION AE-AE
BOLT-DOWN RECESS DETAIL, TYP.

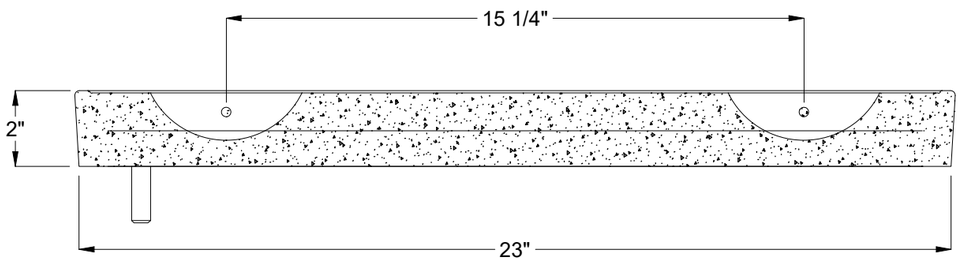

SECTION AD-AD

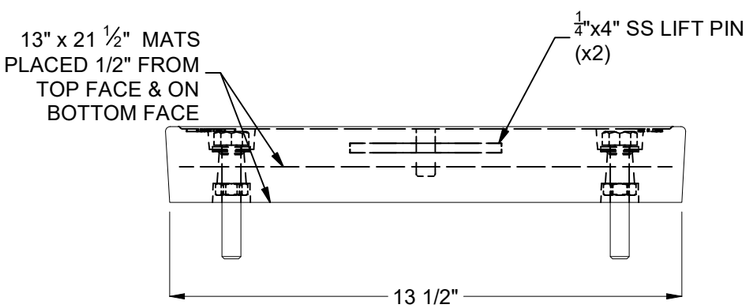

DESIGN SPEC: ANSI/SCTE-77	APPROX. WEIGHT: 43.18 lbs	JENSEN PRECAST EST. 1968	©2023 Jensen Precast- All rights reserved. Unless expressly authorized by Jensen Precast any use or duplication is strictly prohibited under penalty of civil action or codes.	DESCRIPTION: HPC 1324x2 Polymer Cover Bolt Down Caltrans Ex	REV:
AGENCY:	DESIGN/TEST LOAD: 22.5/33.75 kip			PART #: 200076018 / DRAWN BY: M. Baumann	SHEET: 2 OF 3
AGENCY SPEC:	LOADING SPEC: Tier-22			CREATED: 2/19/2019 / MODIFIED: 6/21/2023	

CaltransSubmittalPackage_1324V1.idw

DESIGN NOTES
PART NUMBER AND LOAD RATING TO BE STENCILED UNDER LID AND ON INSIDE AND OUTSIDE OF BOX

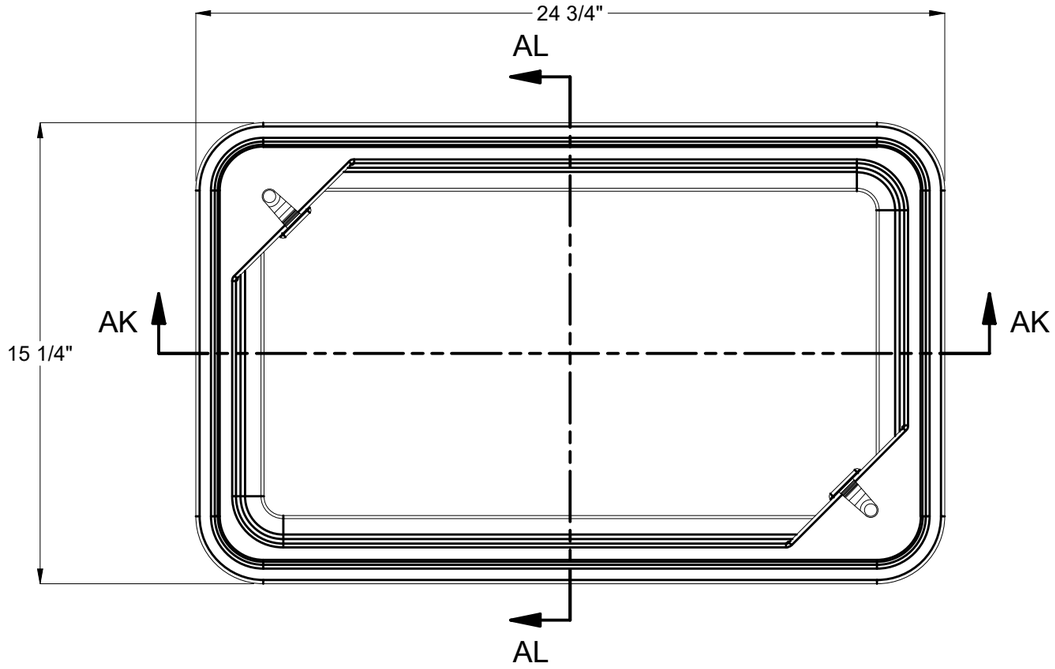

PLAN VIEW

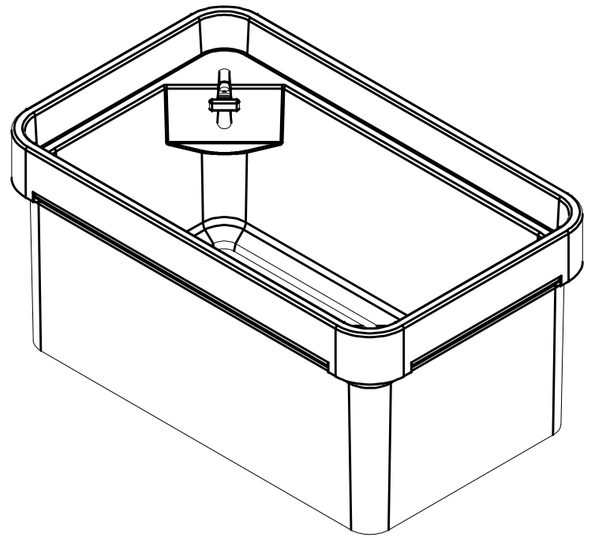

ISO VIEW

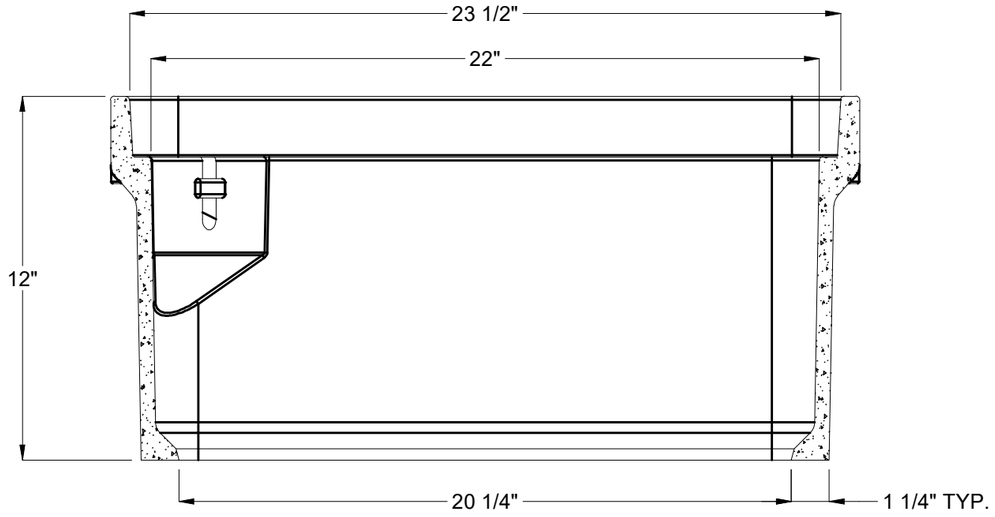

SECTION AK-AK

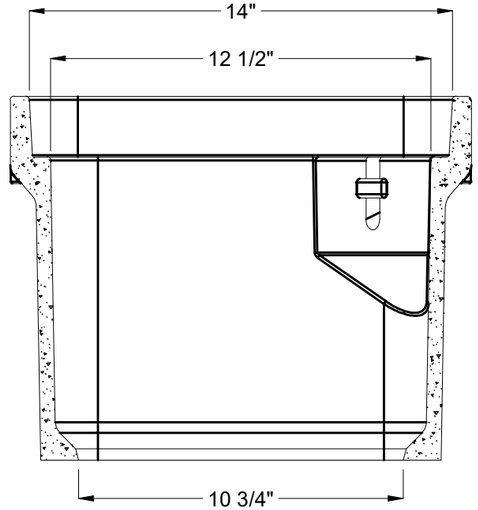

SECTION AL-AL

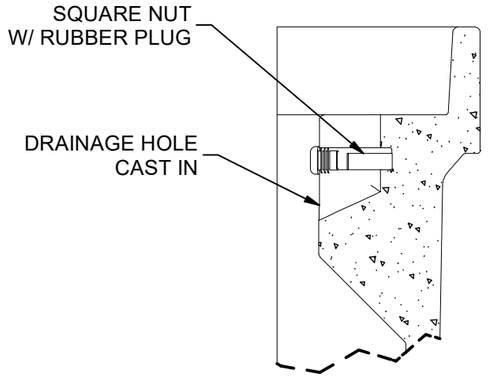

DETAIL AN

DESIGN SPEC: ANSI/SCTE-77	APPROX. WEIGHT: 42.14 lbs	JENSEN PRECAST EST. 1968	©2023 Jensen Precast- All rights reserved. Unless expressly authorized by Jensen Precast any use or duplication is strictly prohibited under penalty of civil action or codes.	DESCRIPTION: HPC 1324x12 Polymer Box 1/2-13 SS Nut V1	REV: A-2
AGENCY:	DESIGN/TEST LOAD: 22.5/33.75 kip			PART #: 200016531 / DRAWN BY: M. Baumann	SHEET: 3 OF 3
AGENCY SPEC:	LOADING SPEC: Tier-22			CREATED: 2/20/2019 / MODIFIED: 6/21/2023	

CaltransSubmittalPackage_1324V1.idw