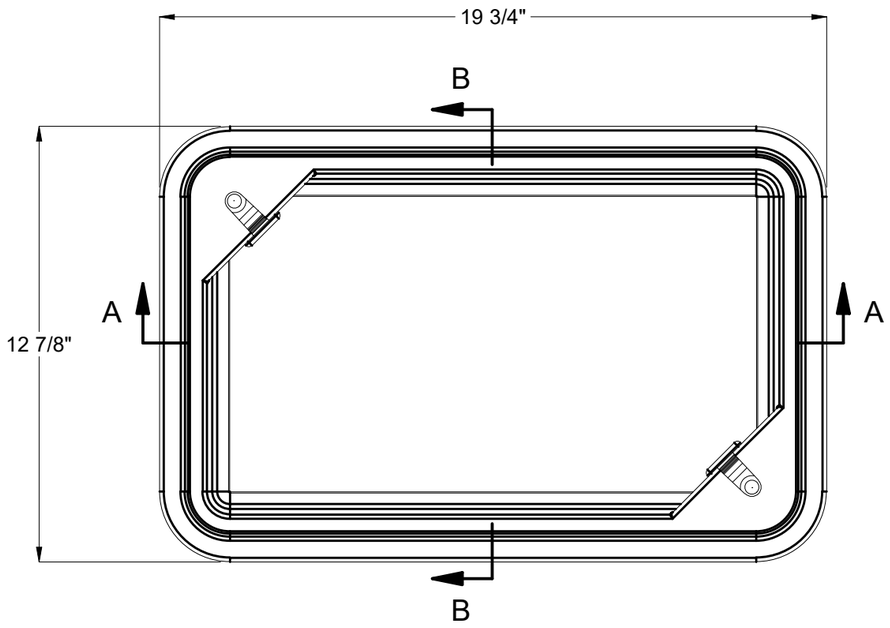

BILL OF MATERIALS

ITEM	UNIT QTY	QTY	PART NUMBER	DESCRIPTION
1	0.271 ft^3	0.271 ft^3	100035038	CONCRETE COMPOSITE BOX MIX BRUCE
2	1	2	100022548	HPC PLUGS 5/8X1-3/8-14-2 PE-LD67 BLK
3	1	2	100021840	SQUARE NUT 1/2-13 304SS

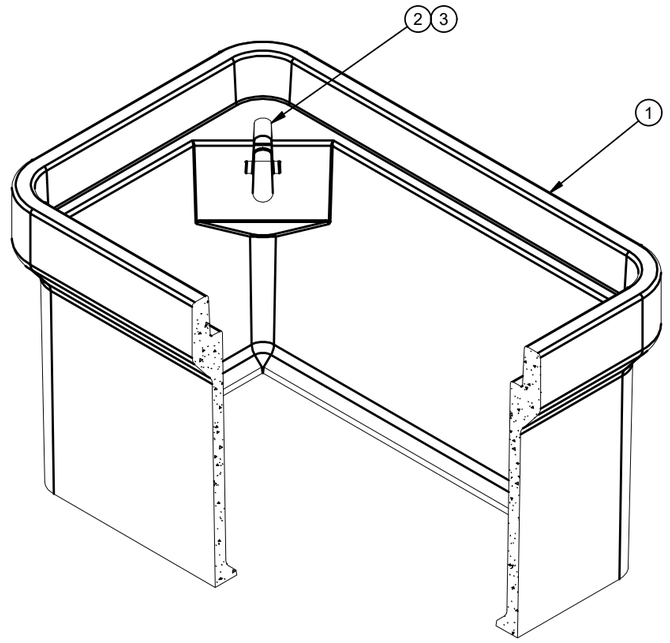

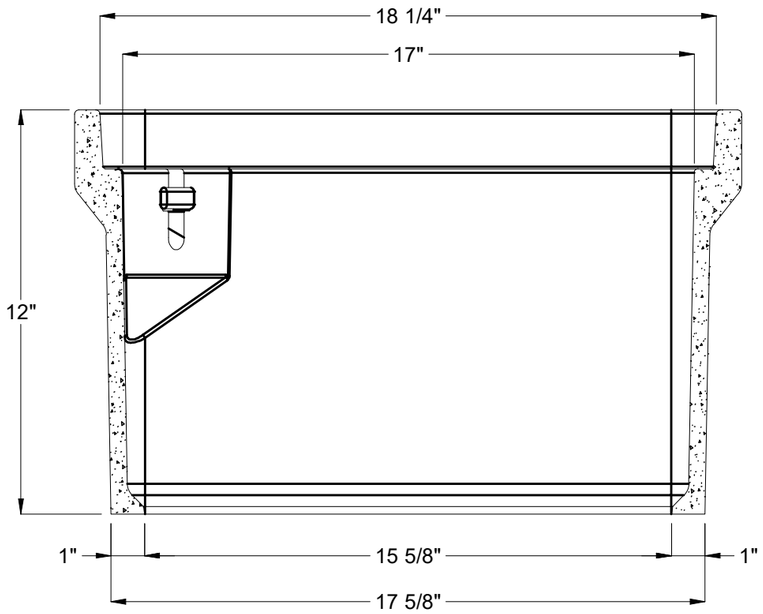

SECTION A-A

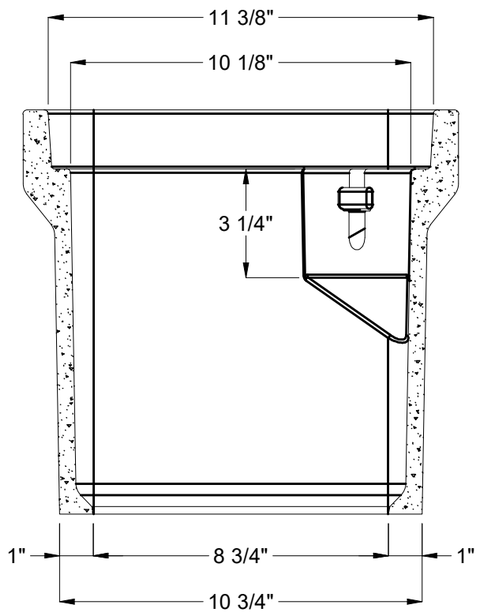

SECTION B-B

REVISION HISTORY			
REV	DESCRIPTION	DATE	BY
A	INITIAL RELEASE	11/23/2021	BGD

DESIGN SPEC: ANSI/SCTE-77	APPROX. WEIGHT: 33.35 lbs		
AGENCY:	DESIGN/TEST LOAD: 22.5/33.75 kip		
AGENCY SPEC:	LOADING SPEC: Tier-22		

JENSEN PRECAST EST. 1968

©2024 Jensen Precast- All rights reserved.
Unless expressly authorized by Jensen Precast any use or duplication is strictly prohibited under penalty of civil action or codes.

DESCRIPTION: HPC 1118x12 Polymer Box 1/2-13 SS Nut

REV: A-2

PART #:	200016525	DRAWN BY:	M. Baumann
CREATED:	2/20/2019	MODIFIED:	7/29/2024

SHEET: 1 OF 1

200016525.idw