DESIGN NOTES
■ DESIGNED IN ACCORDANCE WITH AASHTO HS20-44 TRAFFIC BRIDGE LOADING USING 5,500 PSI COMPRESSIVE STRENGTH CONCRETE AND 60,000 PSI YIELD STRENGTH ASTM A-706 STEEL REINFORCEMENT PER CALCS. #31612.
■ ALL PARTS TO BE STENCILED: MFG DATE / JOB NUMBER / PRODUCT ID / WEIGHT.

BILL OF MATERIALS

ITEM	UNIT QTY	QTY	PART NUMBER	DESCRIPTION
1	68.748 ft^3	68.748 ft^3	100025559	CONCRETE 5500 PSI SCC BURBANK W/ FLY ASH, DCI, FIBER - MIX 14
2	1	4	100002870	ANCHOR DOGBONE P52 2T X 6-3/4" GALV
3	1	4	100002867	ANCHOR DOGBONE P52 2T X 3-3/8" GALV
4	1	16	100003019	TERMINATOR DUCT WITH SEAL 6IN T6000
5	1	2	100005912	PULL IRON OFFSET .875DIA 3.375 IH X 12.125L X 6.5W GALV
6	1	2	100002765	Insert Ferrule Loop 0.5 x 2.75" Zinc (F42 or Equiv.)
7	1	1	300121217	REINFORCING MAT 300121217

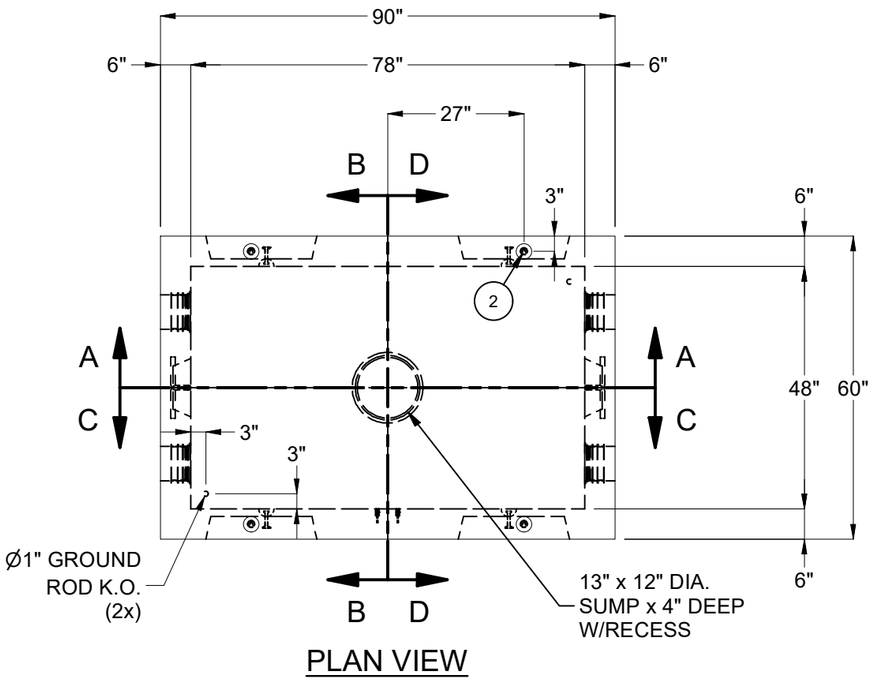

PLAN VIEW

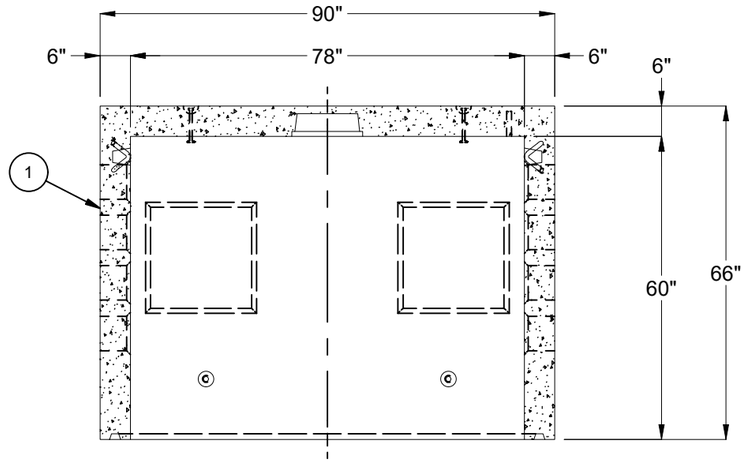

SECTION A-A

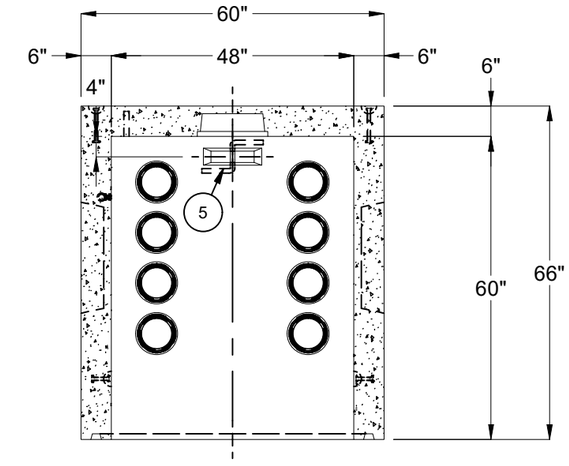

SECTION B-B

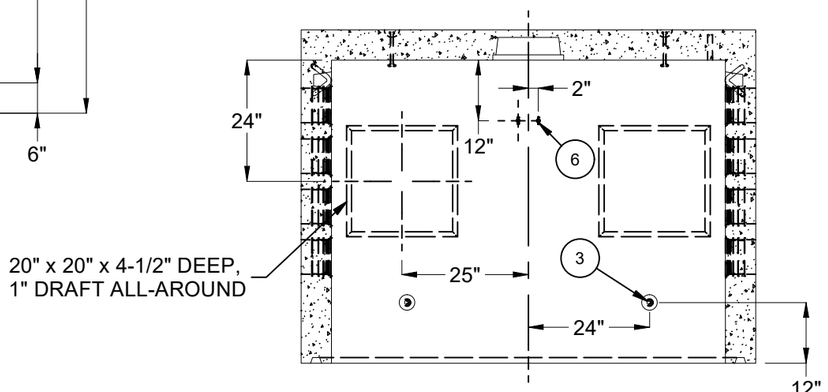

SECTION C-C

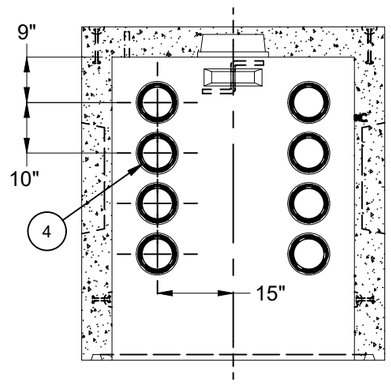

SECTION D-D

LIFTING NOTES
■ INSTALLATION: THIS CONCRETE PRODUCT IS DESIGNED TO BE LIFTED AT 5500 PSI WITH 4 LIFT CONNECTIONS EQUALLY LOADED TO 4 LIFTING POINTS AT A MINIMUM 60° SLING ANGLE, MEASURED FROM HORIZONTAL.
■ DEMOLDING: THIS CONCRETE PRODUCT IS DESIGNED TO BE LIFTED AT 2500 PSI WITH 4 LIFT CONNECTIONS EQUALLY LOADED TO 4 LIFTING POINTS AT A MINIMUM 90° SLING ANGLE, MEASURED FROM HORIZONTAL.
*All rigging shall be design by a qualified professional. Loading diagrams show illustrations of possible rigging setups to achieve the required sling angle and load leg equalization. Other valid rigging configurations are possible. A qualified professional must be consulted prior to lifting.

RIGGING DIAGRAMS*			
INSTALLATION	C	DEMOLDING	E
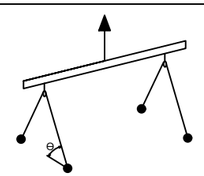		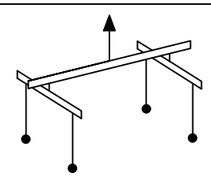	

REVISION HISTORY			
REV	DESCRIPTION	DATE	APPROVED
B	REVISED CAGE, REPLACED ANCHORS & REMOVED TAG	6/26/2024	

BURY DEPTH:	1.0' - 1.0' to Top		
WATER LEVEL:	5.5'	APPROX. WEIGHT:	10345.32 Lbs
DESIGN SPEC:	ACI 318,ASTM C857	LOADING SPEC:	A-16 (AASHTO HS20-44)
REINFORCEMENT TYPE:	Rebar	LIFTING TYPE:	Dogbone

JENSEN PRECAST EST. 1968

WWW.JENSENPRECAST.COM

©2024 Jensen Precast- All rights reserved.
All materials appearing as Jensen Precast documents and the like are proprietary work product and are protected under U.S. copyright and other laws.
Unless in conjunction with business conducted with Jensen Precast, any use of Jensen Precast work product without express, written consent is prohibited, and recipient is prohibited from distributing any and all work product to non-approved third parties under penalty of civil action.

DESCRIPTION:	Vault 4878x60 Rect. Bottom Section Knockout,Terminators Sump Burbank S-615F CASTING LAYOUT		REV: B-1
PART NUMBER:	200016087	DRAWN BY:	J. Prado
CREATED:	2/6/2019	MODIFIED:	6/26/2024
			SHEET: 1 OF 1

200016087.idw