NOTES
■ FOR COMPLETE DESIGN AND PRODUCT INFORMATION CONTACT JENSEN PRECAST.

BILL OF MATERIALS

ITEM	QTY	PART NUMBER	DESCRIPTION
1	190.119 ft^3	100011425	CONCRETE MIX GENERIC 5000 PSI
2	8	100002880	ANCHOR DOGBONE P52 8T X 6-3/4" GALV
3	1	100004775	SUMP PAN GRT 13X13 SQUARE POLYLOK
4	1	300120161	REINFORCING MAT 300120161
5	1.000 ul	100026895	BG2000 WATERPROOFING MULTICOAT

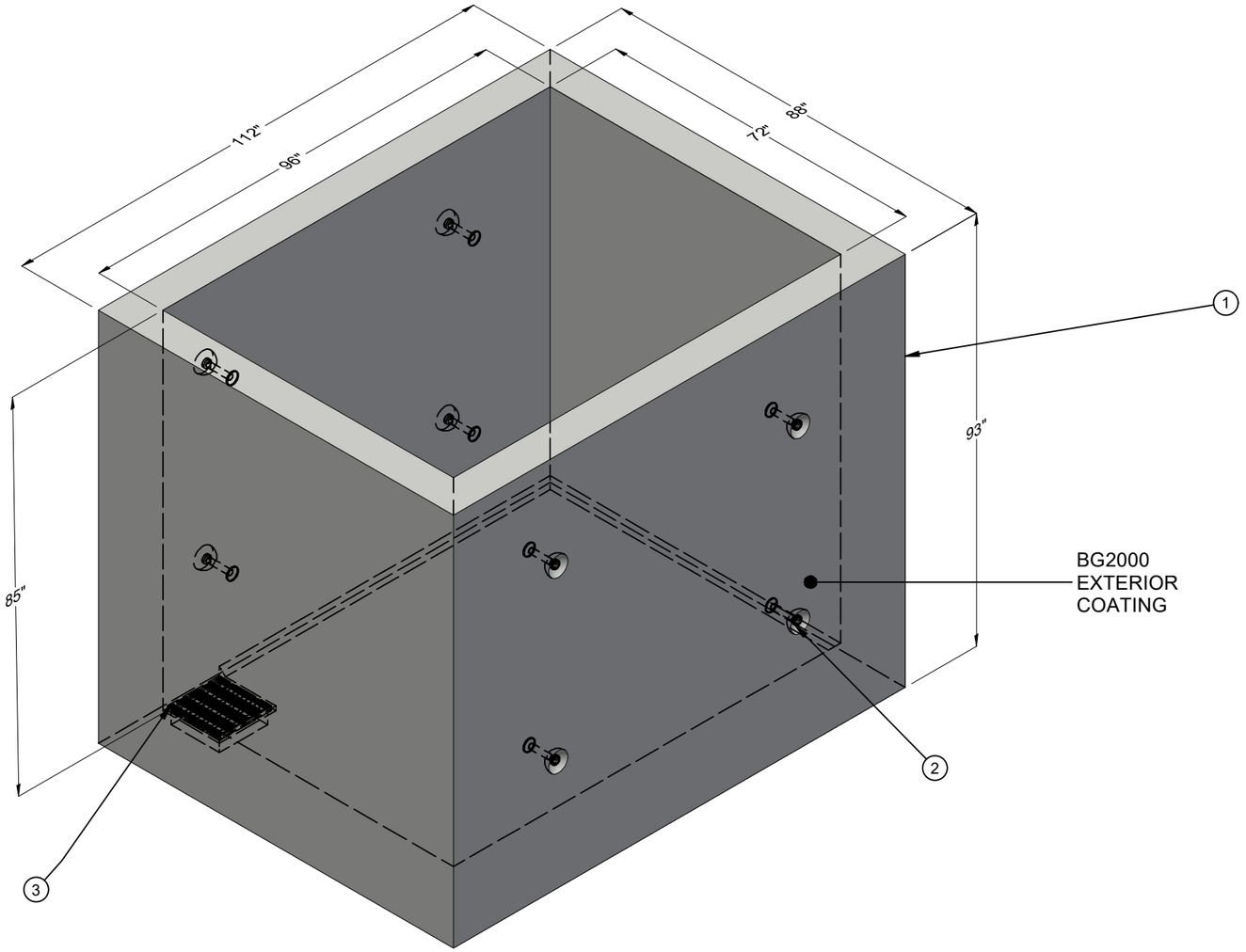

ISO REF

LIFTING NOTES
■ THIS CONCRETE PRODUCT IS DESIGNED TO BE LIFTED AT 2500 PSI WITH 4 LIFT CONNECTIONS EQUALLY LOADED TO 4 LIFTING POINTS AT A MINIMUM 90° SLING ANGLE, MEASURED FROM HORIZONTAL.

BURY DEPTH:	0.9' - 4.9' to Top		
WATER LEVEL:	Below Structure	WEIGHT:	28594.29 Lbs
DESIGN SPEC:	ASTM C890,ACI 318	LOADING SPEC:	A-16 (AASHTO HS20-44)
REINFORCEMENT TYPE:	Rebar	LIFTING TYPE:	Dogbone

JENSEN PRECAST EST. 1968

WWW.JENSENPRECAST.COM

©2018 Jensen Precast- All rights reserved.
All materials appearing as Jensen Precast documents and the like are proprietary work product and are protected under U.S. copyright and other laws.
Unless in conjunction with business conducted with Jensen Precast, any use of Jensen Precast work product without express, written consent is prohibited, and recipient is prohibited from distributing any and all work product to non-approved third parties under penalty of civil action.

REVISION HISTORY			
REV	DESCRIPTION	DATE	APPROVED
A	INITIAL RELEASE	01/03/2019	ACHO
B	LIFTING CHANGE	09/25/2019	DCH
B-1	SLAB THICKNESS CHANGE	11/18/2019	ACHO
C-1	BG2000 ADDED - UPDATED PROPERTIES	06/21/2022	EDC

DESCRIPTION:	Vault 7296x84 Rect. Bottom Section Core Drill Sump Ext. Coating - BG2000 Waterproofing Multicoat		REV: C-3
	CASTING LAYOUT		SHEET: 1 OF 2
PART NUMBER:	200014859	DRAWN BY:	ACHO
CREATED:	12/21/2018	MODIFIED:	6/21/2022

200014859.idw

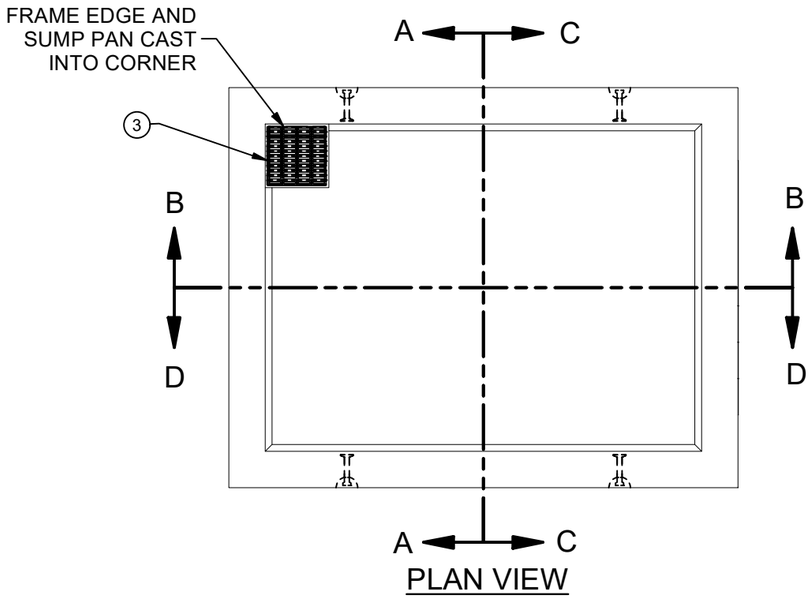

PLAN VIEW

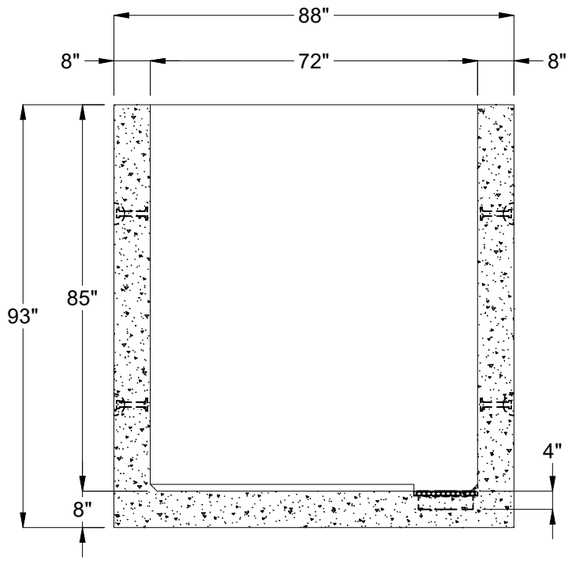

SECTION A-A

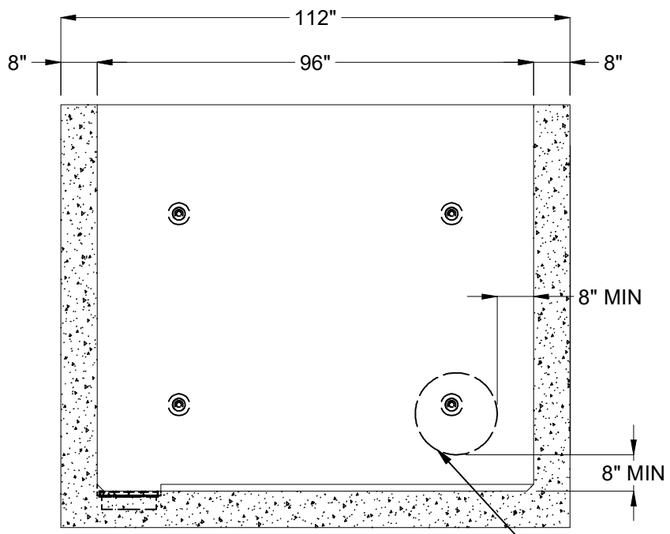

SECTION B-B

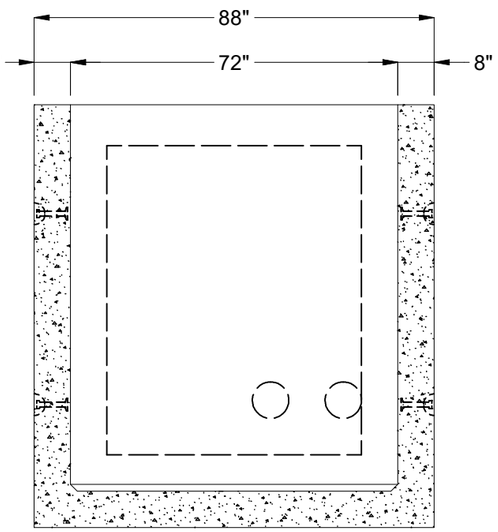

MAXIMUM OF ONE 18" HOLE FOR A FULLY GROUTED
RIGID PIPE ALLOWED AT EACHWALL.
EACH HOLE MUST BE NO CLOSER
THAN 8" OFF INSIDE WALL CORNER AND ABOVE FLOOR

SECTION C-C

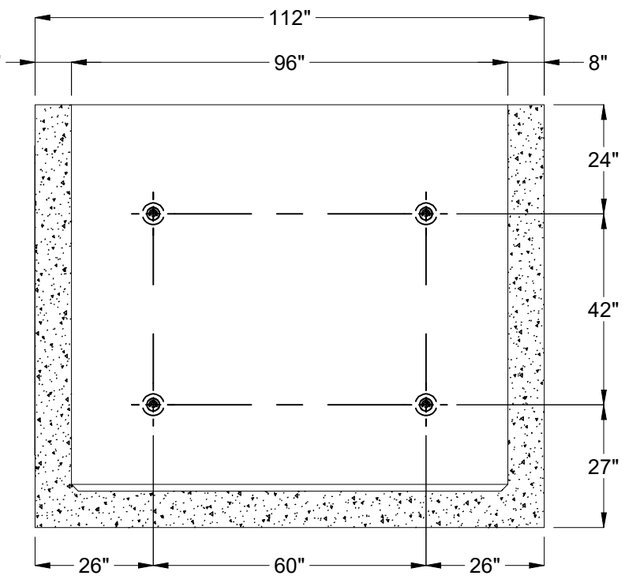

SECTION D-D

BURY DEPTH:	0.9' - 4.9' to Top		
WATER LEVEL:	Below Structure	WEIGHT:	28594.29 Lbs
DESIGN SPEC:	ASTM C890,ACI 318	LOADING SPEC:	A-16 (AASHTO HS20-44)
REINFORCEMENT TYPE:	Rebar	LIFTING TYPE:	Dogbone

JENSEN PRECAST EST. 1968

WWW.JENSENPRECAST.COM

©2018 Jensen Precast- All rights reserved.
All materials appearing as Jensen Precast documents and the like are proprietary work product and are protected under U.S. copyright and other laws.
Unless in conjunction with business conducted with Jensen Precast, any use of Jensen Precast work product without express, written consent is prohibited, and recipient is prohibited from distributing any and all work product to non-approved third parties under penalty of civil action.

DESCRIPTION:	Vault 7296x84 Rect. Bottom Section Core Drill Sump Ext. Coating - BG2000 Waterproofing Multicoat CASTING DRAWING		REV: C-3
PART NUMBER:	200014859	DRAWN BY:	ACHO
CREATED:	12/21/2018	MODIFIED:	6/21/2022
			SHEET: 2 OF 2

200014859.idw