DESIGN NOTES

- FOR COMPLETE DESIGN AND PRODUCT INFORMATION CONTACT JENSEN PRECAST.

BILL OF MATERIALS

ITEM	QTY	PART NUMBER	DESCRIPTION
1	78.624 ft^3	100011425	CONCRETE MIX 5000 PSI
2	4	100007133	ANCHOR UTILITY .671DIA 7.625-SLAB GALV P75 8UA671
3	1	300120125	REINFORCING MAT 300120125

*REBAR REINFORCING CAN BE SWAPPED OUT FOR DEFORMED WIRE CAGE PART NUMBER 200019536

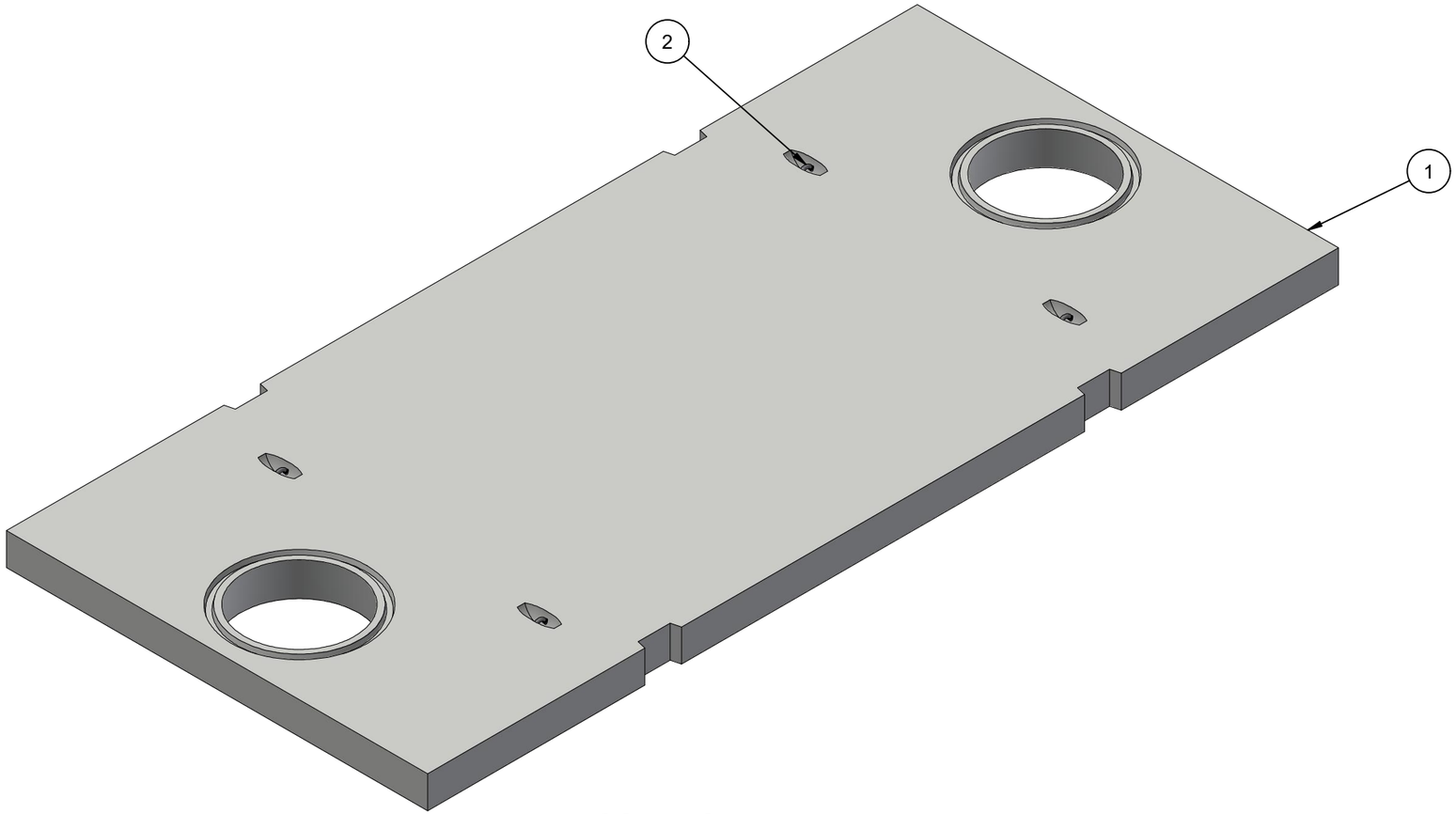

ISO LAYOUT

200014700.idw

LIFTING NOTES

- THIS CONCRETE PRODUCT IS DESIGNED TO BE LIFTED AT 2500 PSI WITH 4 LIFT CONNECTIONS EQUALLY LOADED TO 2 LIFTING POINTS AT A MINIMUM 60° SLING ANGLE, MEASURED FROM HORIZONTAL.

REVISION HISTORY

REV	DESCRIPTION	DATE	BY
A	DRAWING CREATED	10/12/2018	T.Larson
B	LIFTING UPDATED AND GRADE RING GROOVE ADDED	1/11/2021	C.Keller

BURY DEPTH:	1.1' - 5.0' to Top of Top Slab		
WATER LEVEL:	Below Structure	WEIGHT:	11822.55 Lbs
DESIGN SPEC:	ASTM C890,ACI 318	LOADING SPEC:	A-16 (AASHTO HS20-44)
REINFORCEMENT TYPE:	Rebar	LIFTING TYPE:	A-Anchor

JENSEN PRECAST EST. 1968

WWW.JENSENPRECAST.COM

©2018 Jensen Precast- All rights reserved.
All materials appearing as Jensen Precast documents and the like are proprietary work product and are protected under U.S. copyright and other laws.
Unless in conjunction with business conducted with Jensen Precast, any use of Jensen Precast work product without express, written consent is prohibited, and recipient is prohibited from distributing any and all work product to non-approved third parties under penalty of civil action.

DESCRIPTION:	Tank JZ 4000/5000 Gallon x 7 Slab Top 24 EE CASTING LAYOUT		
PART NUMBER:	200014700	DRAWN BY:	M.Vallarino
CREATED:	12/20/2018	MODIFIED:	2/8/2021

REV: B-1

SHEET: 1 OF 2

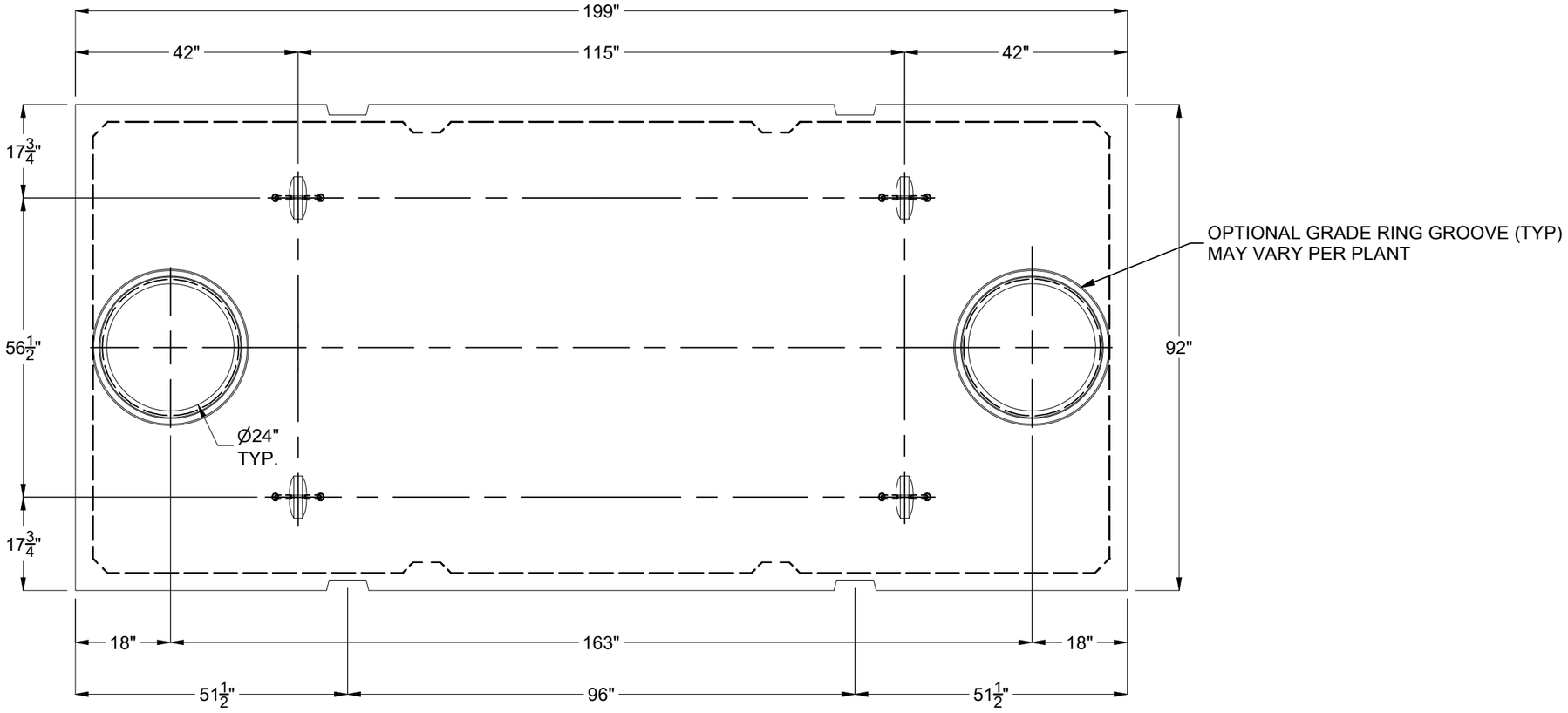

PLAN VIEW

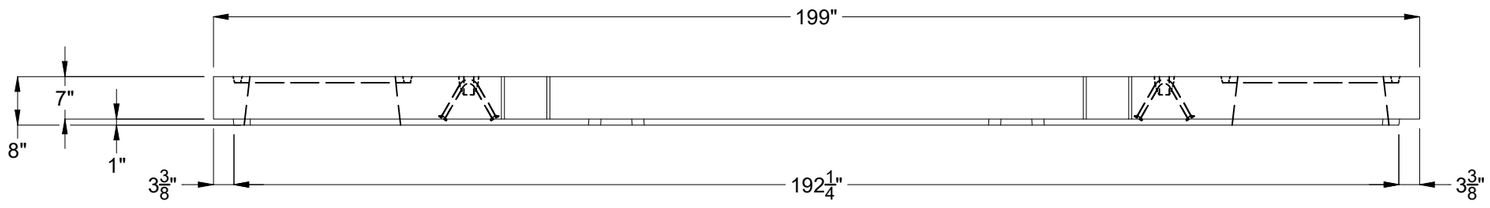

ELEVATION VIEW

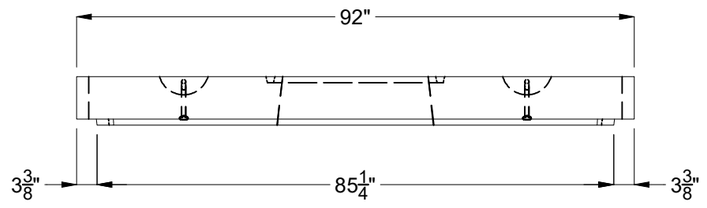

ELEVATION VIEW

BURY DEPTH:	1.1' - 5.0' to Top of Top Slab		
WATER LEVEL:	Below Structure	WEIGHT:	11822.55 Lbs
DESIGN SPEC:	ASTM C890,ACI 318	LOADING SPEC:	A-16 (AASHTO HS20-44)
REINFORCEMENT TYPE:	Rebar	LIFTING TYPE:	A-Anchor

JENSEN PRECAST EST. 1968

WWW.JENSENPRECAST.COM

©2018 Jensen Precast- All rights reserved.
All materials appearing as Jensen Precast documents and the like are proprietary work product and are protected under U.S. copyright and other laws.
Unless in conjunction with business conducted with Jensen Precast, any use of Jensen Precast work product without express, written consent is prohibited, and recipient is prohibited from distributing any and all work product to non-approved third parties under penalty of civil action.

DESCRIPTION:	Tank JZ 4000/5000 Gallon x 7 Slab Top 24 EE CASTING DRAWING		REV: B-1
PART NUMBER:	200014700	DRAWN BY:	M.Vallarino
CREATED:	12/20/2018	MODIFIED:	2/8/2021

SHEET: 2 OF 2

200014700.idw