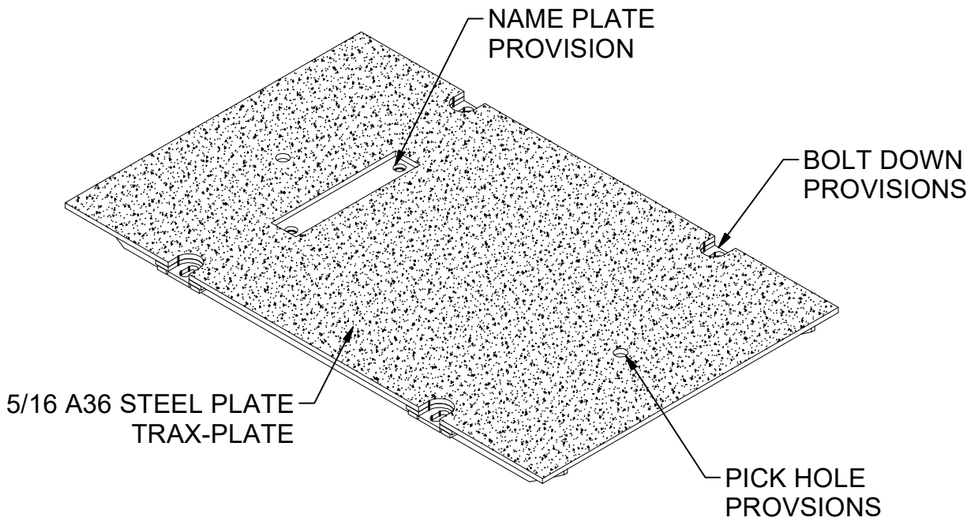

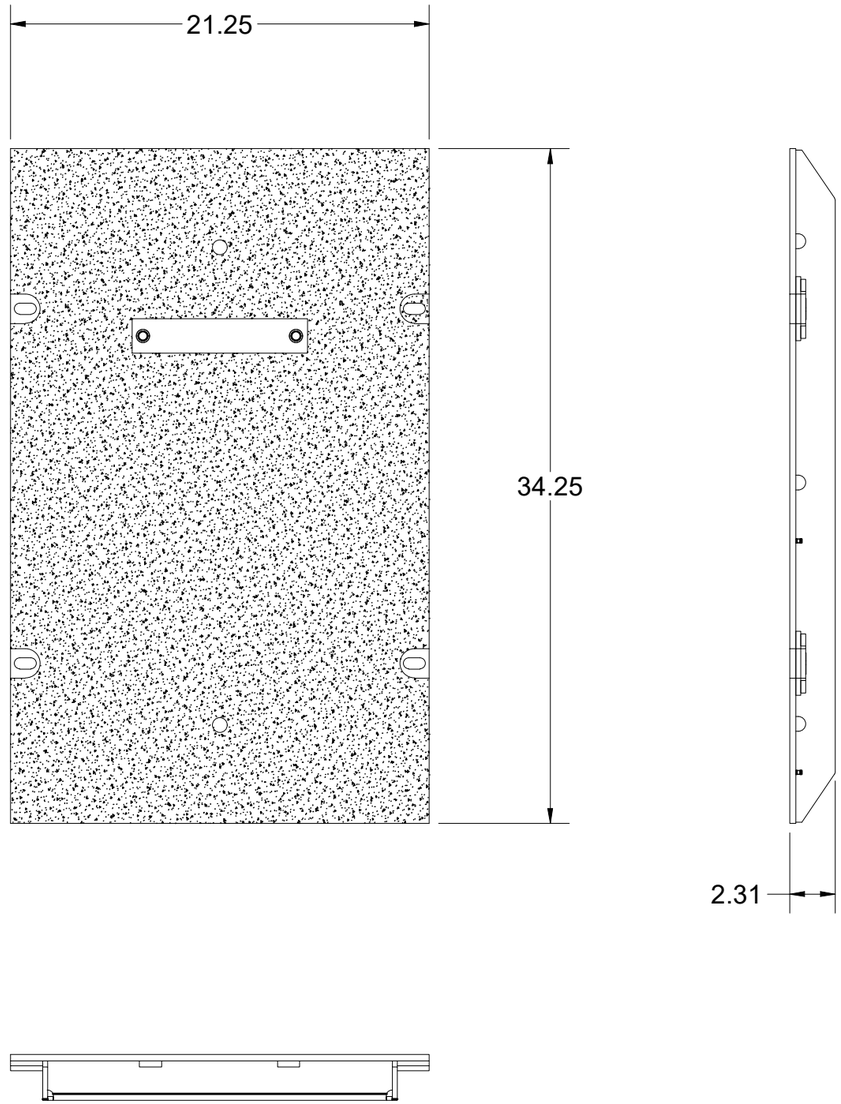

200014220.idw

LOADING CRITERIA: ASTM C1802 Load Level 05

16,000 lb load on 10" x 20" footprint, with 30% impact restricted to unrestricted parking lanes and alleyways where traffic speed is limited to 15 miles per hour.

SURFACE:	TraxPlate™	FINISH:	Galvanized
WEIGHT:	100.51 lbs	MARKING:	None

JENSEN METALTECH
450 E. GLENDALE AVE. SPARKS. NV 89431
775-352-2716 FAX: 755-358-8127
JENSENMETALTECH.COM

©2024 Jensen Precast- All rights reserved.
All materials appearing as Jensen Precast documents and the like are proprietary work product and are protected under U.S. copyright and other laws.
Unless in conjunction with business conducted with Jensen Precast, any use of Jensen Precast work product without express, written consent is prohibited, and recipient is prohibited from distributing any and all work product to non-approved third parties under penalty of civil action.

DESCRIPTION: DAS1-SD-1730-D5-TRX-G-BD-PG&E

17x30 Standard Door Assembly (Loading Criteria Per ASTM C1802 Load Level 05, Single Door, Steel, Drop In, Pickhole, TraxPlate™, Galvanized, PG&E)

REV: C-1-1

SHEET: 1

PART NUMBER:	200014220	DRAWN BY:	A. Billett
CREATED:	12/10/2018	MODIFIED:	9/13/2024

BILL OF MATERIALS

ITEM	UNIT QTY	QTY	PART NUMBER	DESCRIPTION	PART NAME
1	8.477 lbmass	25.432 lbmass	100007734	Door Component Steel Channel	200014332
2	4.392 lbmass	8.783 lbmass	100007735	Door Component Steel Side Bar	200014336
3	62.329 lbmass	62.329 lbmass	100007835	Door Component Steel Plate, Top	200014350
3	0.241 lbmass	0.965 lbmass	100007735	Bolt Doubler Riser	200014352
5	1	2	100007728	NUT SELF-CLINCH 1/2-13 S-0813-1 RAW	100007728
6	0.314 lbmass	1.256 lbmass	100007735	Bolt Doubler	200014354
7	1.664 lbmass	1.664 lbmass	100007735	Name Plate Backing	200014371

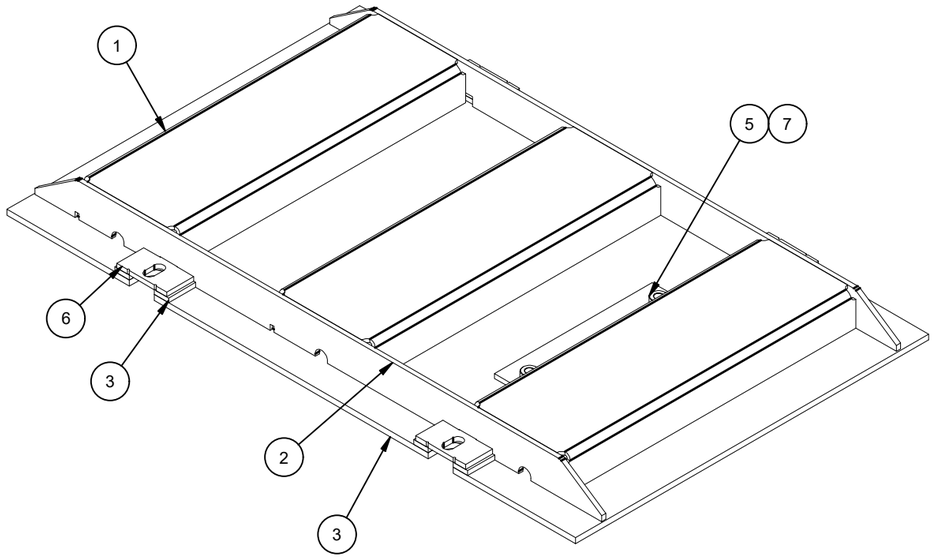

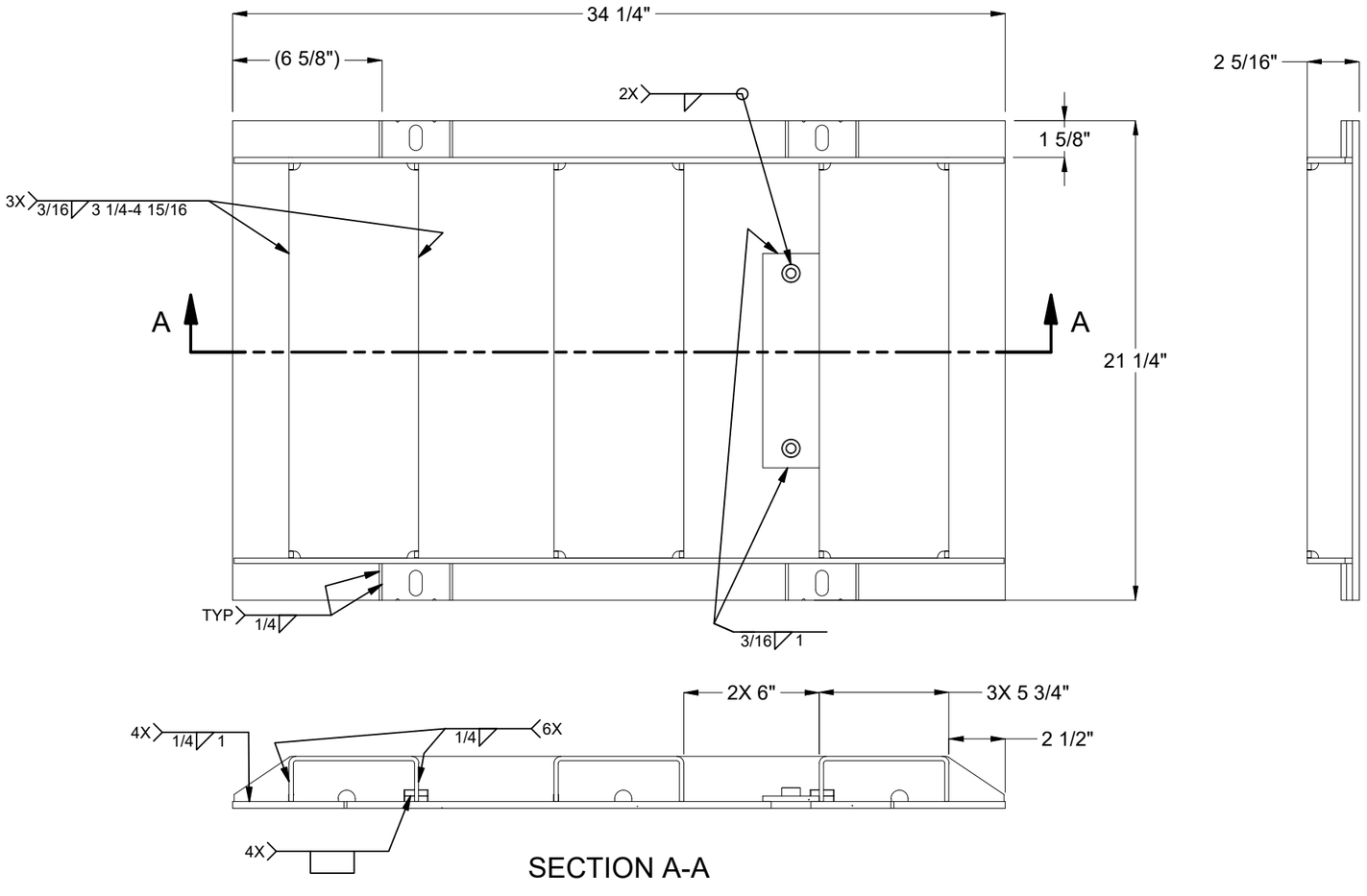

SECTION A-A

MATERIAL FINISH: Galvanized	JENSEN METALTECH 450 E. GLENDALE AVE. SPARKS. NV 89431 775-352-2716 FAX: 755-358-8127 *JENSENMETALTECH.COM*	©2024 Jensen Precast- All rights reserved. All materials appearing as Jensen Precast documents and the like are proprietary work product and are protected under U.S. copyright and other laws. Unless in conjunction with business conducted with Jensen Precast, any use of Jensen Precast work product without express, written consent is prohibited, and recipient is prohibited from distributing any and all work product to non-approved third parties under penalty of civil action.	PART NUMBER & DESCRIPTION: 200014220 DAS1-SD-1730-D5-TRX-G-BD-PG&E — REV: C-1-1
MATERIAL SURFACE: TraxPlate™			WEIGHT: 100.51 Lbs — DRAWN BY: A. Billett — SHEET: 2
			CREATED: 12/10/2018 — MODIFIED: 9/13/2024

200014220.idw

BURN LIST - BOM

PART NAME	ITEM QTY	QTY	DESCRIPTION	STOCK NUMBER	MATERIAL	MASS	SHEET
200014332	3	25.432 lbmass	Door Component Steel Channel	100007734	STL ASTM A36 SM-HRPO 60X120 RAW .1875	8.477 lbmass	04
200014336	2	8.783 lbmass	Door Component Steel Side Bar	100007735	STL ASTM A36 SM-HRPO RAW .250	4.392 lbmass	05
200014350	1	62.329 lbmass	Door Component Steel Plate, Top	100007835	STL ASTM A36 SM-HRPO RAW .3125	62.329 lbmass	06
200014352	4	0.965 lbmass	Bolt Doubler Riser	100007735	STL ASTM A36 SM-HRPO RAW .250	0.241 lbmass	07
200014354	4	1.256 lbmass	Bolt Doubler	100007735	STL ASTM A36 SM-HRPO RAW .250	0.314 lbmass	08
200014371	1	1.664 lbmass	Name Plate Backing	100007735	STL ASTM A36 SM-HRPO RAW .250	1.664 lbmass	09

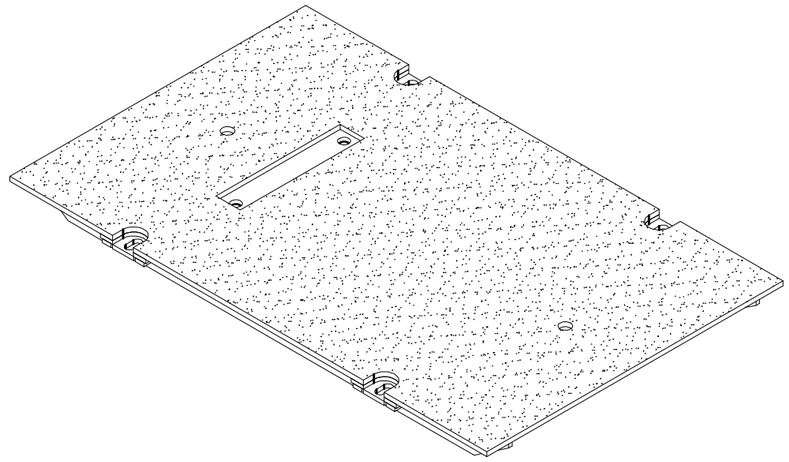

200014220.idw

MATERIAL FINISH: Galvanized

MATERIAL SURFACE: TraxPlate™

JENSEN METALTECH
450 E. GLENDALE AVE. SPARKS. NV 89431
775-352-2716 FAX: 755-358-8127
JENSENMETALTECH.COM

©2024 Jensen Precast- All rights reserved.
All materials appearing as Jensen Precast documents and the like are proprietary work product and are protected under U.S. copyright and other laws.
Unless in conjunction with business conducted with Jensen Precast, any use of Jensen Precast work product without express, written consent is prohibited, and recipient is prohibited from distributing any and all work product to non-approved third parties under penalty of civil action.

PART NUMBER & DESCRIPTION: 200014220 DAS1-SD-1730-D5-TRX-G-BD-PG&E

REV: C-1-1

WEIGHT: 100.51 Lbs

DRAWN BY: A. Billett

CREATED: 12/10/2018

MODIFIED: 9/13/2024

SHEET: 3

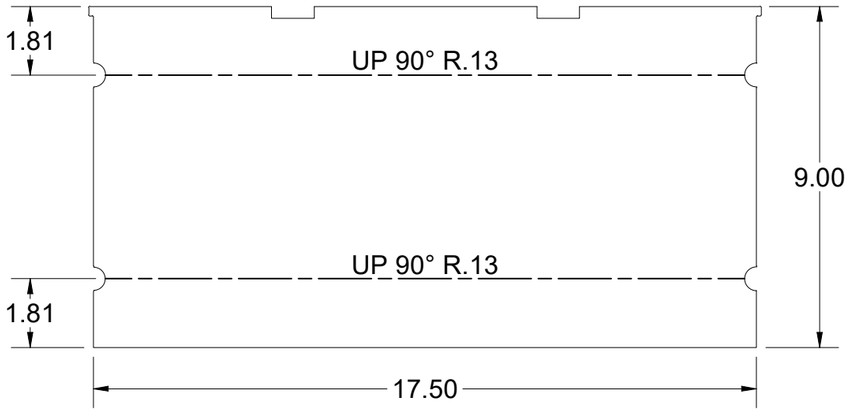

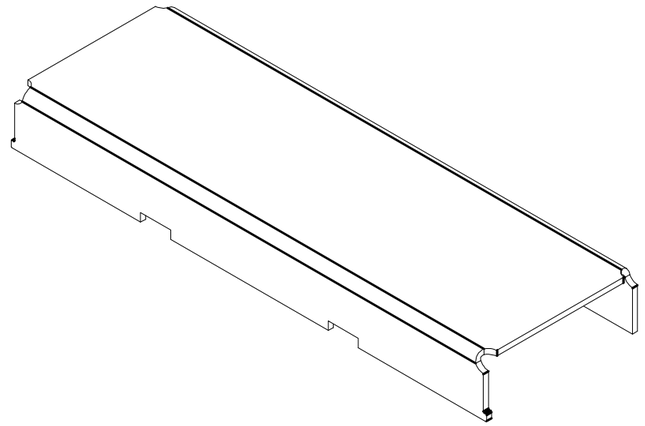

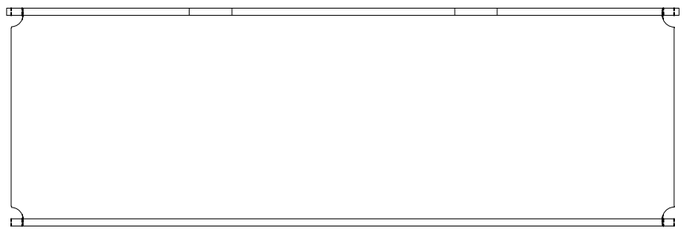

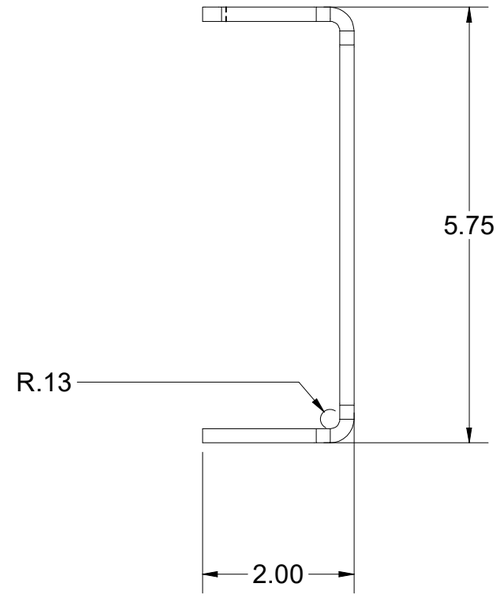

BEND TABLE				MATERIAL IFS: 100007734
BEND RADIUS	V-OPENING	BEND ANGLE	BEND DEDUCTION	MATERIAL THK: 0.1875
0.125	2	90	0.3750	MAT DESCRIPTION: STL ASTM A36 SM-HRPO 60X120 RAW .1875

JENSEN METALTECH
450 E. GLENDALE AVE. SPARKS. NV 89431
775-352-2716 FAX: 755-358-8127
JENSENMETALTECH.COM

©2024 Jensen Precast- All rights reserved. All materials appearing as Jensen Precast documents and the like are proprietary work product and are protected under U.S. copyright and other laws.
Unless in conjunction with business conducted with Jensen Precast, any use of Jensen Precast work product without express, written consent is prohibited, and recipient is prohibited from distributing any and all work product to non-approved third parties under penalty of civil action.

NAME & DESCRIPTION: 200014332 Door Component Steel Channel		REV: C-1-1
WEIGHT: 8.477 lbmass	DRAWN BY: A. Billett	SHEET: 4 OF 9
CREATED: 12/10/2018	MODIFIED: 9/13/2024	

200014220.idw

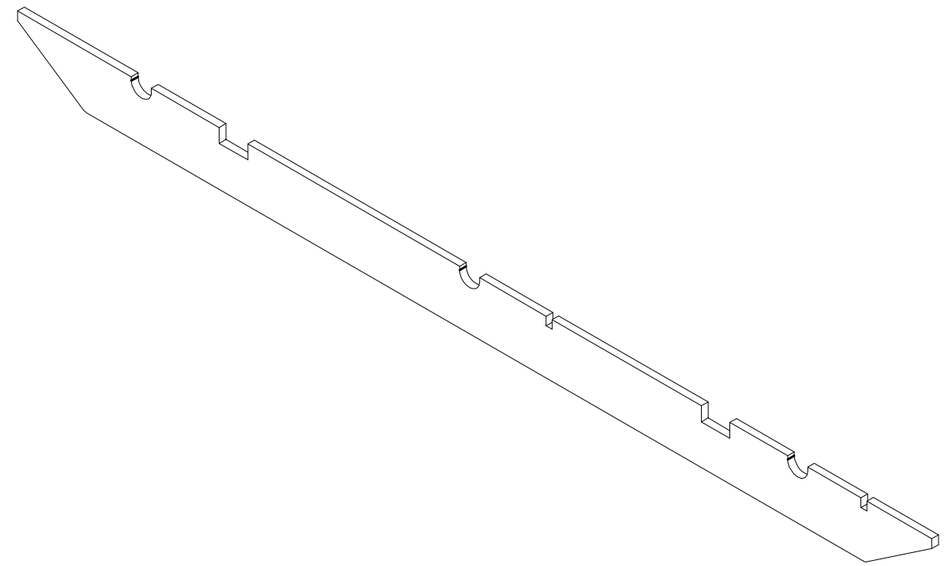

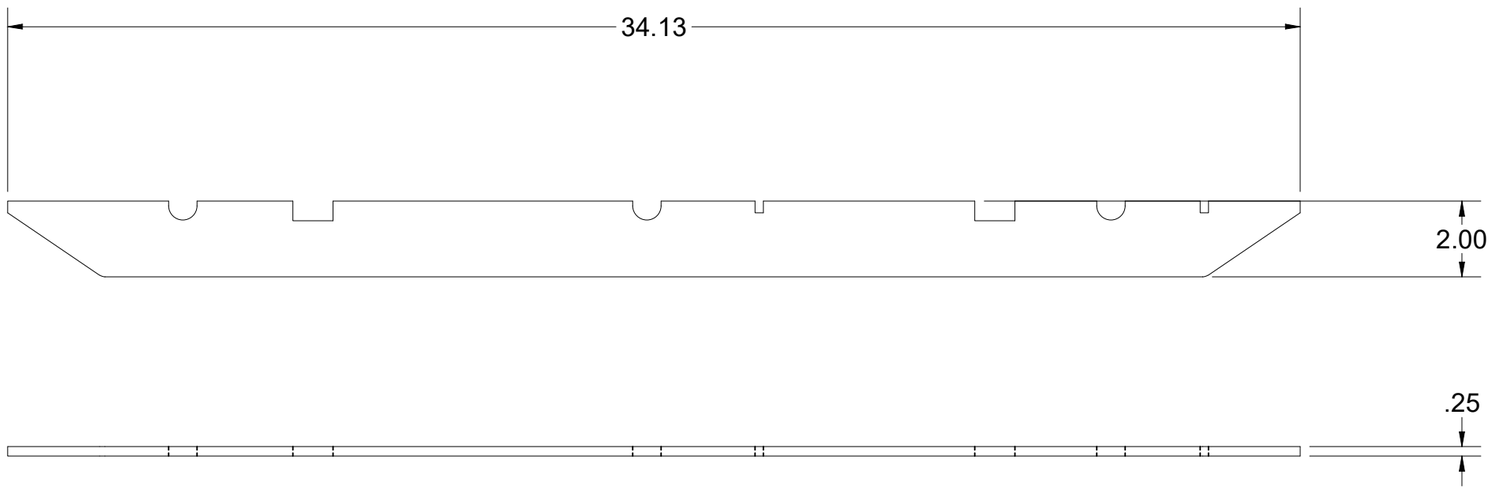

BEND TABLE				MATERIAL IFS: 100007735
BEND RADIUS	V-OPENING	BEND ANGLE	BEND DEDUCTION	MATERIAL THK: 0.25
-	-	-	-	MAT DESCRIPTION: STL ASTM A36 SM-HRPO RAW .250

JENSEN METALTECH
450 E. GLENDALE AVE. SPARKS. NV 89431
775-352-2716 FAX: 755-358-8127
JENSENMETALTECH.COM

©2024 Jensen Precast- All rights reserved.
All materials appearing as Jensen Precast documents and the like are proprietary work product and are protected under U.S. copyright and other laws.
Unless in conjunction with business conducted with Jensen Precast, any use of Jensen Precast work product without express, written consent is prohibited, and recipient is prohibited from distributing any and all work product to non-approved third parties under penalty of civil action.

NAME & DESCRIPTION:	200014336 Door Component Steel Side Bar		REV: C-1-1
WEIGHT: 4.392 lbmass		DRAWN BY: A. Billett	SHEET: 5 OF 9
CREATED: 12/10/2018		MODIFIED: 9/13/2024	

200014220.idw

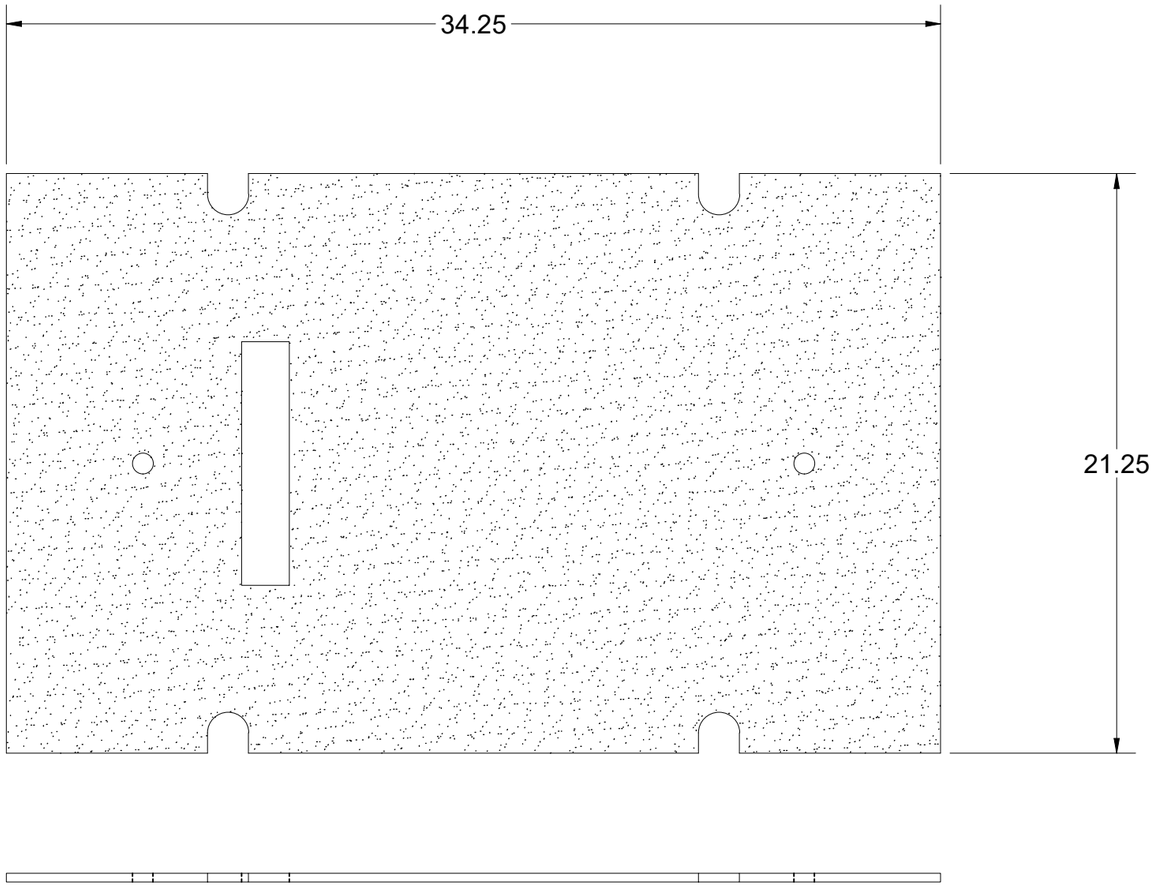

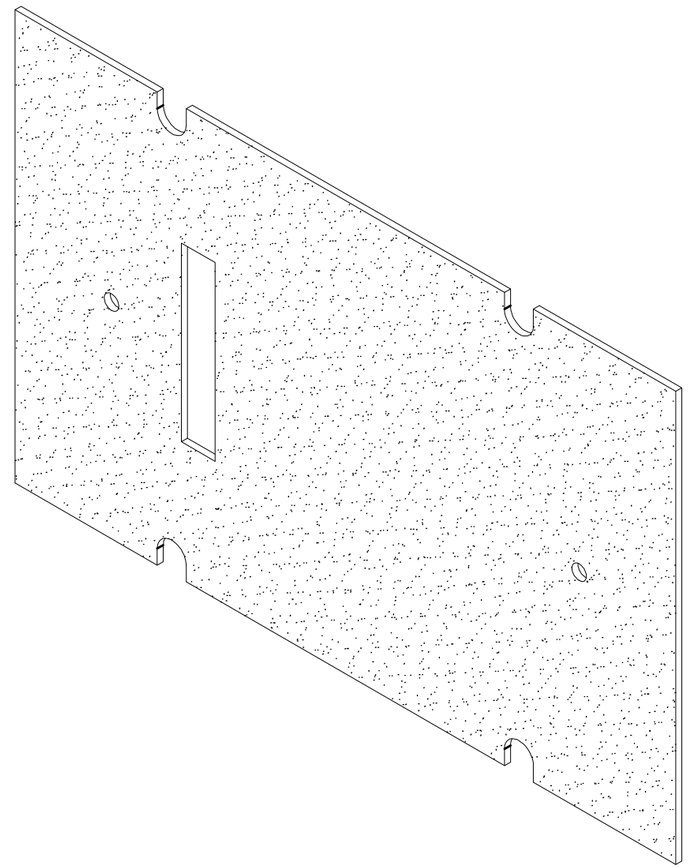

200014220.idw

BEND TABLE				MATERIAL IFS: 100007835			
BEND RADIUS	V-OPENING	BEND ANGLE	BEND DEDUCTION	MATERIAL THK: 0.3125			
-	-	-	-	MAT DESCRIPTION: STL ASTM A36 SM-HRPO RAW .3125			

JENSEN METALTECH
450 E. GLENDALE AVE. SPARKS. NV 89431
775-352-2716 FAX: 755-358-8127
JENSENMETALTECH.COM

©2024 Jensen Precast- All rights reserved.
All materials appearing as Jensen Precast documents and the like are proprietary work product and are protected under U.S. copyright and other laws.
Unless in conjunction with business conducted with Jensen Precast, any use of Jensen Precast work product without express, written consent is prohibited, and recipient is prohibited from distributing any and all work product to non-approved third parties under penalty of civil action.

NAME & DESCRIPTION:	200014350 Door Component Steel Plate, Top	REV:
WEIGHT: 62.329 lbmass	DRAWN BY: A. Billett	SHEET:
CREATED: 12/10/2018	MODIFIED: 9/13/2024	6 OF 9
		C-1-1

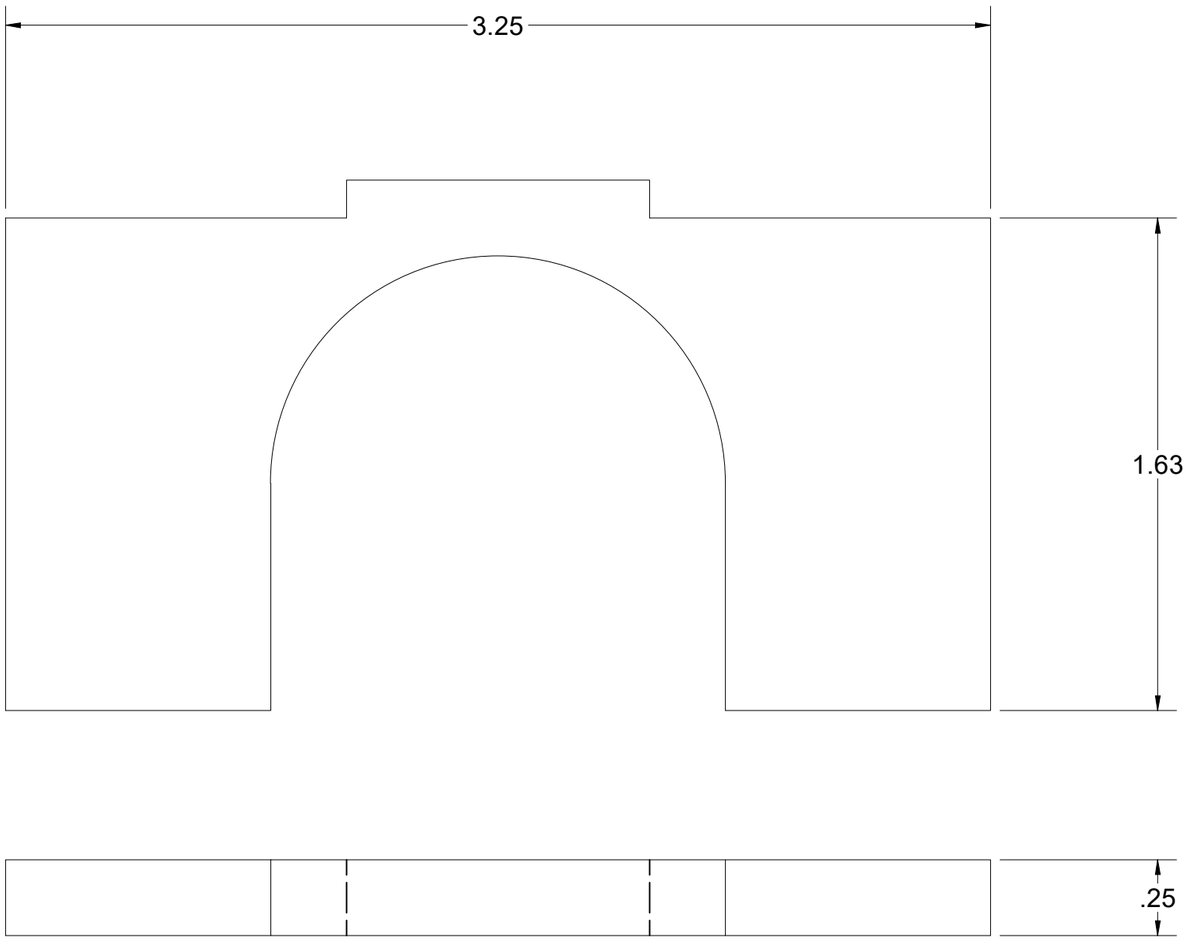

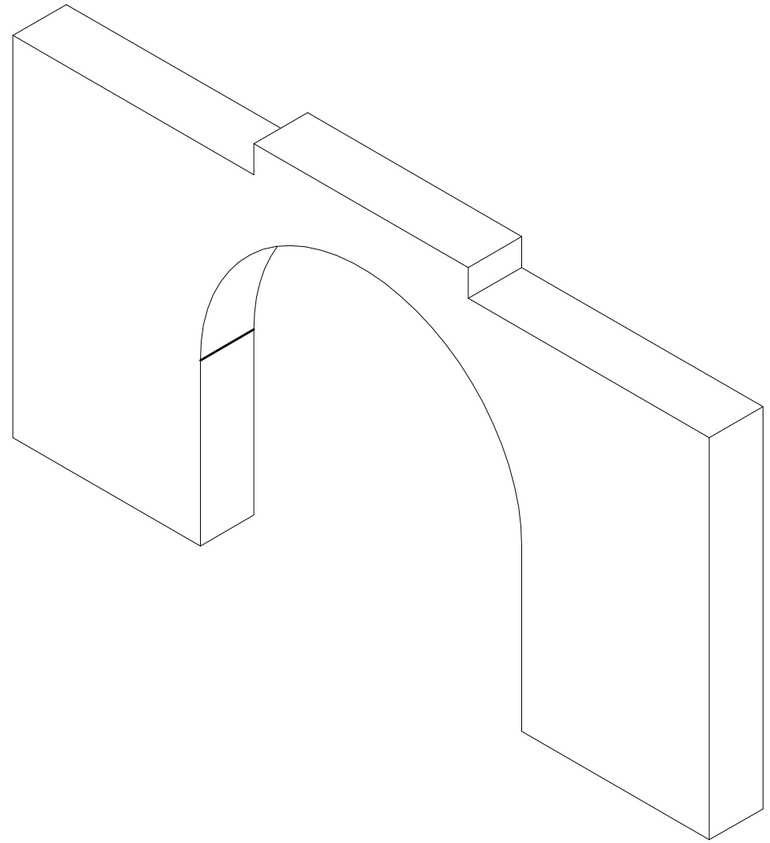

200014220.idw

BEND TABLE				MATERIAL IFS: 100007735			
BEND RADIUS	V-OPENING	BEND ANGLE	BEND DEDUCTION	MATERIAL THK: 0.25			
-	-	-	-	MAT DESCRIPTION: STL ASTM A36 SM-HRPO RAW .250			

JENSEN METALTECH
450 E. GLENDALE AVE. SPARKS. NV 89431
775-352-2716 FAX: 755-358-8127
JENSENMETALTECH.COM

©2024 Jensen Precast- All rights reserved.
All materials appearing as Jensen Precast documents and the like are proprietary work product and are protected under U.S. copyright and other laws.
Unless in conjunction with business conducted with Jensen Precast, any use of Jensen Precast work product without express, written consent is prohibited, and recipient is prohibited from distributing any and all work product to non-approved third parties under penalty of civil action.

NAME & DESCRIPTION:	200014352 Bolt Doubler Riser		REV: C-1-1
WEIGHT: 0.241 lbmass		DRAWN BY: A. Billett	SHEET: 7 OF 9
CREATED: 12/10/2018		MODIFIED: 9/13/2024	

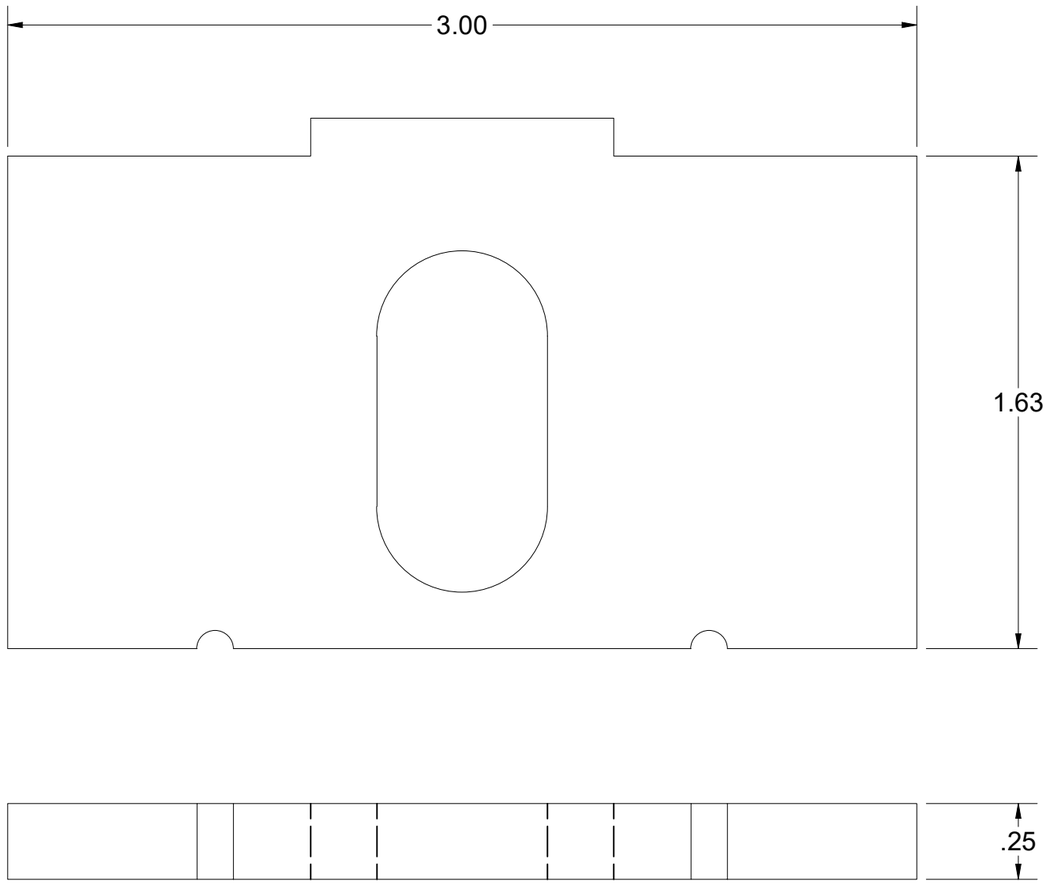

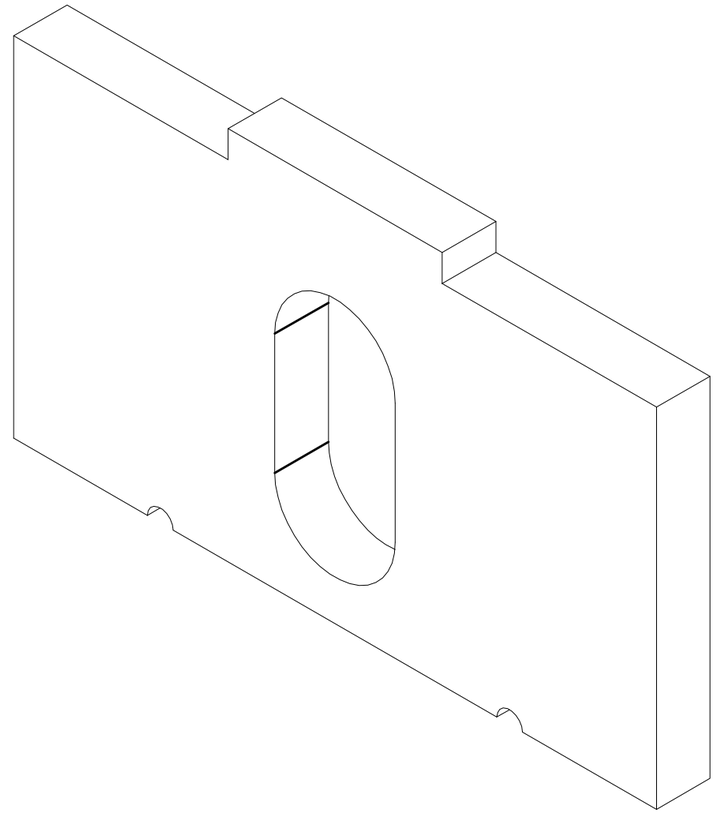

200014220.idw

BEND TABLE				MATERIAL IFS: 100007735				
BEND RADIUS	V-OPENING	BEND ANGLE	BEND DEDUCTION	MATERIAL THK: 0.25				
-	-	-	-	MAT DESCRIPTION: STL ASTM A36 SM-HRPO RAW .250				

JENSEN METALTECH
450 E. GLENDALE AVE. SPARKS. NV 89431
775-352-2716 FAX: 755-358-8127
JENSENMETALTECH.COM

©2024 Jensen Precast- All rights reserved.
All materials appearing as Jensen Precast documents and the like are proprietary work product and are protected under U.S. copyright and other laws.
Unless in conjunction with business conducted with Jensen Precast, any use of Jensen Precast work product without express, written consent is prohibited, and recipient is prohibited from distributing any and all work product to non-approved third parties under penalty of civil action.

NAME & DESCRIPTION:	200014354 Bolt Doubler	REV:
WEIGHT: 0.314 lbmass	DRAWN BY: A. Billett	SHEET:
CREATED: 12/10/2018	MODIFIED: 9/13/2024	8 OF 9

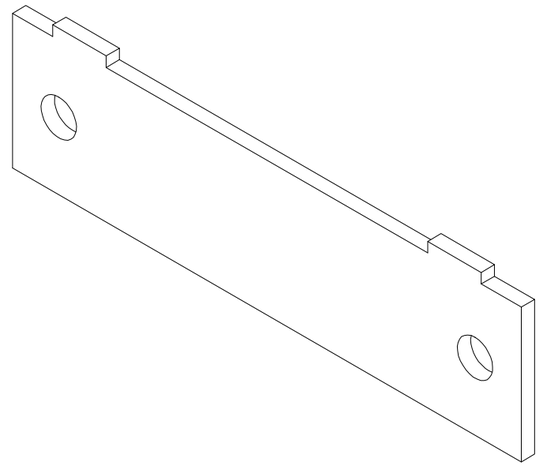

200014220.idw

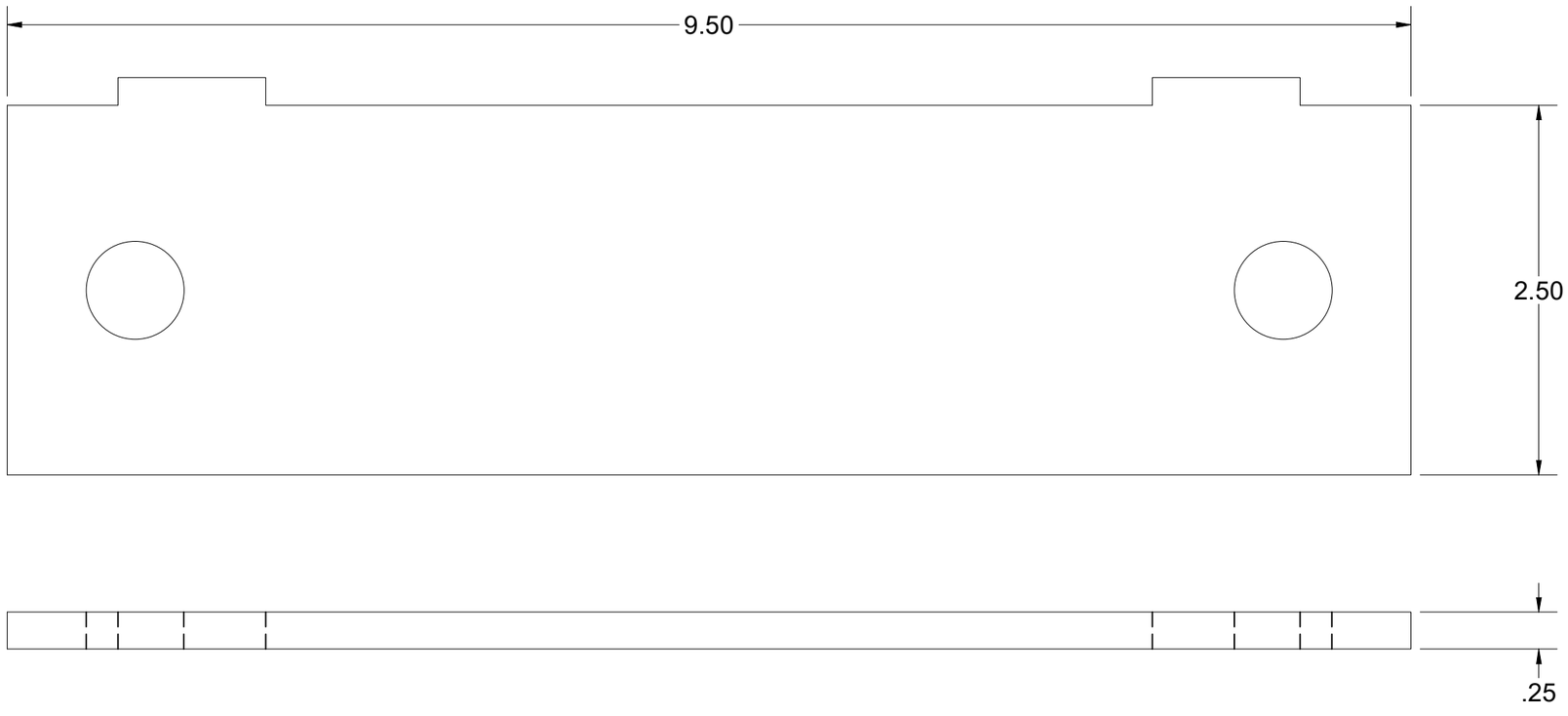

BEND TABLE				MATERIAL IFS: 100007735
BEND RADIUS	V-OPENING	BEND ANGLE	BEND DEDUCTION	MATERIAL THK: 0.25
-	-	-	-	MAT DESCRIPTION: STL ASTM A36 SM-HRPO RAW .250

JENSEN METALTECH
450 E. GLENDALE AVE. SPARKS. NV 89431
775-352-2716 FAX: 755-358-8127
JENSENMETALTECH.COM

©2024 Jensen Precast- All rights reserved.
All materials appearing as Jensen Precast documents and the like are proprietary work product and are protected under U.S. copyright and other laws.
Unless in conjunction with business conducted with Jensen Precast, any use of Jensen Precast work product without express, written consent is prohibited, and recipient is prohibited from distributing any and all work product to non-approved third parties under penalty of civil action.

NAME & DESCRIPTION:	200014371 Name Plate Backing		REV:
WEIGHT: 1.664 lbmass		DRAWN BY: A. Billett	SHEET:
CREATED: 12/10/2018		MODIFIED: 9/13/2024	9 OF 9