DESIGN NOTES

- DESIGNED PER CALCS. #34294
- ALL PARTS TO BE STENCILED: MFG DATE / PRODUCT ID / WEIGHT.

BILL OF MATERIALS

ITEM	UNIT QTY	QTY	PART NUMBER	DESCRIPTION
1	12.447 ft^3	12.447 ft^3	100006029	CONCRETE 5500 PSI SCC ED
2	1	1	100009391	CI RING 30DIAX4 NEENAH R-1581 SWIVELOC 15812024
3	1	2	100002767	Insert Ferrule Loop 0.75 x 3.5" Zinc (F42 or Equiv.)
4	1	2	100008216	LADDER STEP RUNG GALV 16IN CAST-IN EDISON 12A37
5	1	4	100021083	DOWEL SMOOTH L-SHAPED .5DIA X 3.5IN X 12IN
6	1	8	100002657	Flat Washer - 1/2 - wide - Type A - Zinc
7	1	8	100007007	HEX NUT 1/2-13 UNC HEAVY GALV
8	1	4	100003031	PULL IRON SINGLE SIDE .875DIA 9 IH X 2.875L X 9.625W GALV
9	1	1	300119977	REINFORCING MAT 300119977

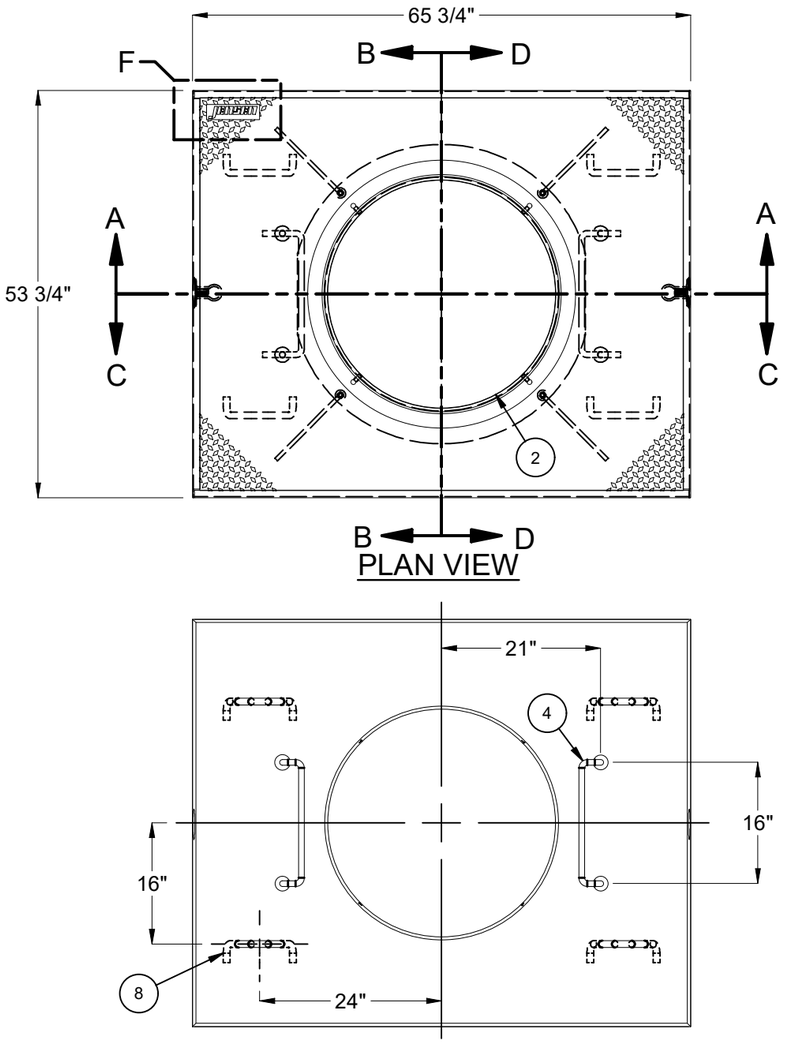

PLAN VIEW

BOTTOM VIEW

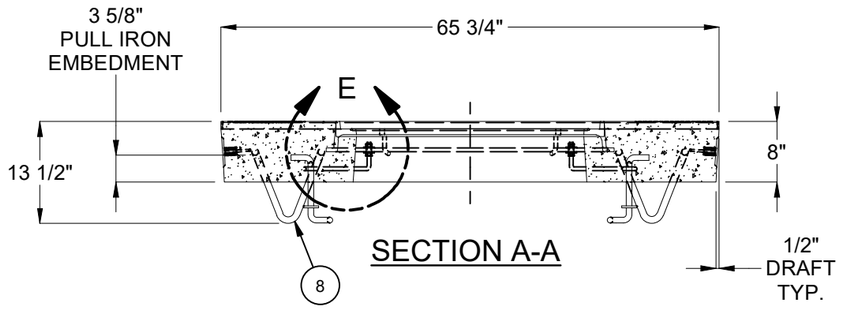

SECTION A-A

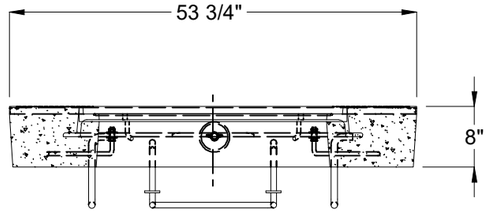

SECTION B-B

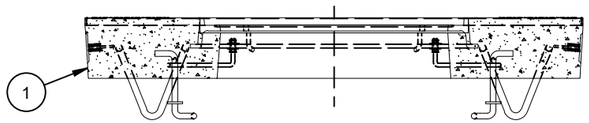

SECTION C-C

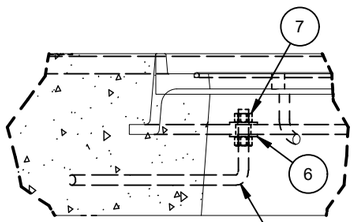

DETAIL E

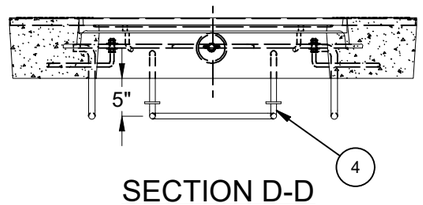

SECTION D-D

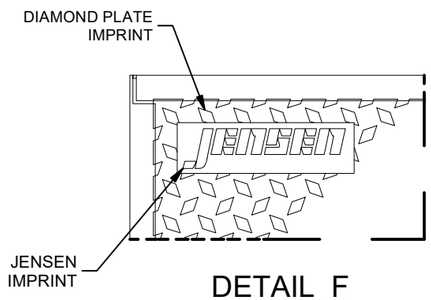

DETAIL F

LIFTING NOTES

- INSTALLATION: THIS CONCRETE PRODUCT IS DESIGNED TO BE LIFTED AT 5500 PSI WITH 2 LIFT CONNECTIONS EQUALLY LOADED TO 2 LIFTING POINTS AT A MINIMUM 60° SLING ANGLE, MEASURED FROM HORIZONTAL.
- DEMOLDING: THIS CONCRETE PRODUCT IS DESIGNED TO BE LIFTED AT 2500 PSI WITH 2 LIFT CONNECTIONS EQUALLY LOADED TO 2 LIFTING POINTS AT A MINIMUM 90° SLING ANGLE, MEASURED FROM HORIZONTAL.

*All rigging shall be design by a qualified professional. Loading diagrams show illustrations of possible rigging setups to achieve the required sling angle and load leg equalization. Other valid rigging configurations are possible. A qualified professional must be consulted prior to lifting.

RIGGING DIAGRAMS*

INSTALLATION	F	DEMOLDING	G

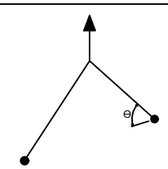

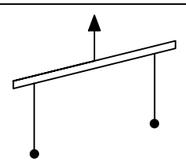

BURY DEPTH:	0.0' - 0.0' to Top		
WATER LEVEL:	3.0'	APPROX. WEIGHT:	2053.5 Lbs
DESIGN SPEC:	ACI 318,ASTM C857	LOADING SPEC:	A-16 (AASHTO HS20-44)
REINFORCEMENT TYPE:	Rebar	LIFTING TYPE:	Insert

Infrastructure
JENSEN
WWW.JENSENINFRASTRUCTURE.COM

©2026 Jensen Infrastructure - All rights reserved.
All materials appearing as Jensen Infrastructure documents and the like are proprietary work product and are protected under U.S. copyright and other laws.
Unless in conjunction with business conducted with Jensen Infrastructure , any use of Jensen Infrastructure work product without express, written consent is prohibited, and recipient is prohibited from distributing any and all work product to non-approved third parties under penalty of civil action.
This product shall only be produced in a Jensen Infrastructure facility.

REVISION HISTORY

REV	DESCRIPTION	DATE	APPROVED
F-1-1	REVISED DIMENSION ON SECTION B-B	9/3/2026	

DESCRIPTION:	Plug Cover 4860x8 Slab Top 30"C Edison FC 641 Swiveloc CASTING LAYOUT	REV:	F-1-1
PART NUMBER:	200012889	DRAWN BY:	J. Prado
CREATED:	10/23/2018	MODIFIED:	9/3/2026
		SHEET:	1 OF 1

200012889.idw