NOTES
■ ALL PARTS TO BE STENCILED: MFG DATE / JOB NUMBER / PRODUCT ID / WEIGHT.

BILL OF MATERIALS

ITEM	UNIT QTY	QTY	PART NUMBER	DESCRIPTION
1	99.497 ft^3	99.497 ft^3	100006029	CONCRETE 5500 PSI SCC ED
2	1	4	100002874	ANCHOR DOGBONE P52 4T X 4-3/4" GALV
3	1	4	100002877	ANCHOR DOGBONE P52 4T X 9-1/2" GALV
4	1	4	100003026	PULL IRON OFFSET .875DIA 6H X 5W X 10.875L GALV
5	1	4	100005912	PULL IRON OFFSET .875DIA 3.375 IH X 12.125L X 6.5W GALV
6	1	28	100005936	TERMINATOR DUCT WITH SEAL 5IN T5001
7	1	18	100012720	INSERT PLASTIC W/ BREAK OFF SNAP 0.5IN
8	1	2	100005715	PIPE SCH 40 1IN PVC W/CAP 6"L
9	1	1	300119737	REINFORCING MAT 300119737

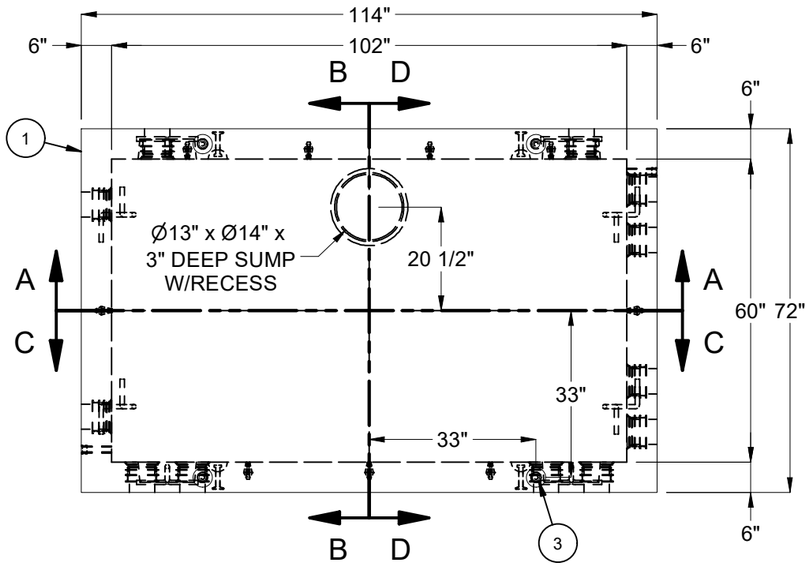

PLAN VIEW

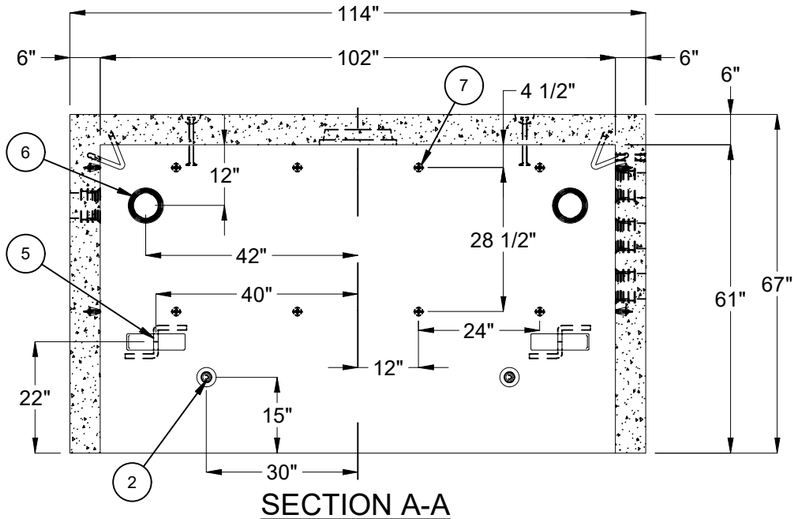

SECTION A-A

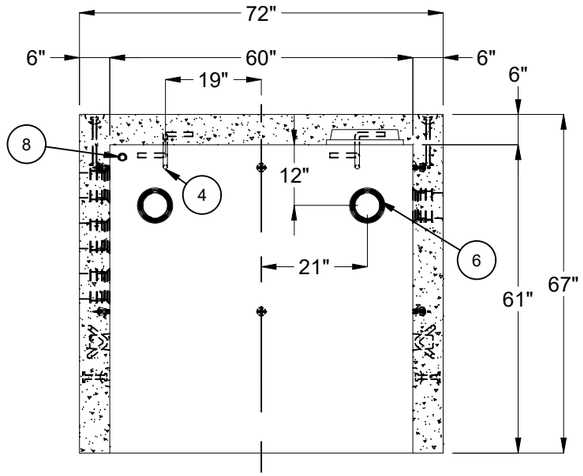

SECTION B-B

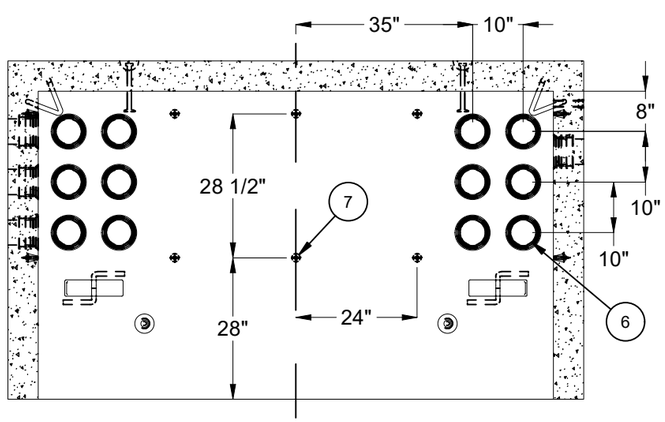

SECTION C-C

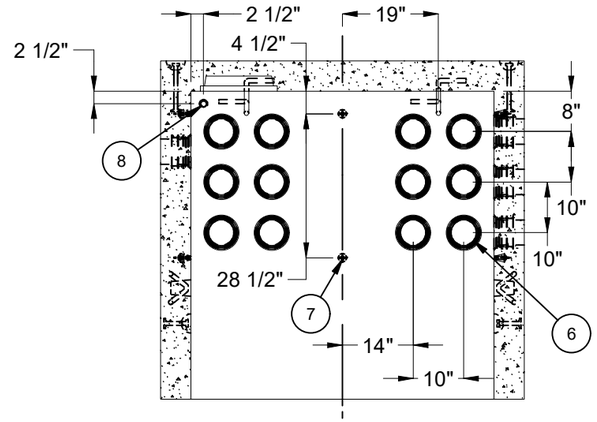

SECTION D-D

LIFTING NOTES
■ DEMOLDING: THIS CONCRETE PRODUCT IS DESIGNED TO BE LIFTED AT 2,500 PSI WITH 4 LIFT CONNECTIONS EQUALLY LOADED TO 4 LIFTING POINTS AT A MINIMUM 90° SLING ANGLE, MEASURED FROM HORIZONTAL.
■ INSTALLATION: THIS CONCRETE PRODUCT IS DESIGNED TO BE LIFTED AT 5,500 PSI WITH 4 LIFT CONNECTIONS EQUALLY LOADED TO 4 LIFTING POINTS AT A MINIMUM 60° SLING ANGLE, MEASURED FROM HORIZONTAL.

BURY DEPTH:	4.0' - 4.0' to Top		
WATER LEVEL:	3.0'	APPROX. WEIGHT:	14980.76 Lbs
DESIGN SPEC:	ACI 318,ASTM C857	LOADING SPEC:	A-16 (AASHTO HS20-44)
REINFORCEMENT TYPE:	Rebar	LIFTING TYPE:	Dogbone

JENSEN PRECAST EST. 1968

WWW.JENSENPRECAST.COM

©2023 Jensen Precast- All rights reserved.
All materials appearing as Jensen Precast documents and the like are proprietary work product and are protected under U.S. copyright and other laws.
Unless in conjunction with business conducted with Jensen Precast, any use of Jensen Precast work product without express, written consent is prohibited, and recipient is prohibited from distributing any and all work product to non-approved third parties under penalty of civil action.

REVISION HISTORY			
REV	DESCRIPTION	DATE	APPROVED
F-2	UPDATE B.O.M.	3/1/2023	

DESCRIPTION: Vault 60102x61 Rect. Bottom Section Terminators Sump EDISON UGS SS535, SB-3 CASTING DRAWING				REV: F-2
PART NUMBER:	200012579	DRAWN BY:	D. Mejia	SHEET: 1 OF 1
CREATED:	10/10/2018	MODIFIED:	3/1/2023	

200012579.idw