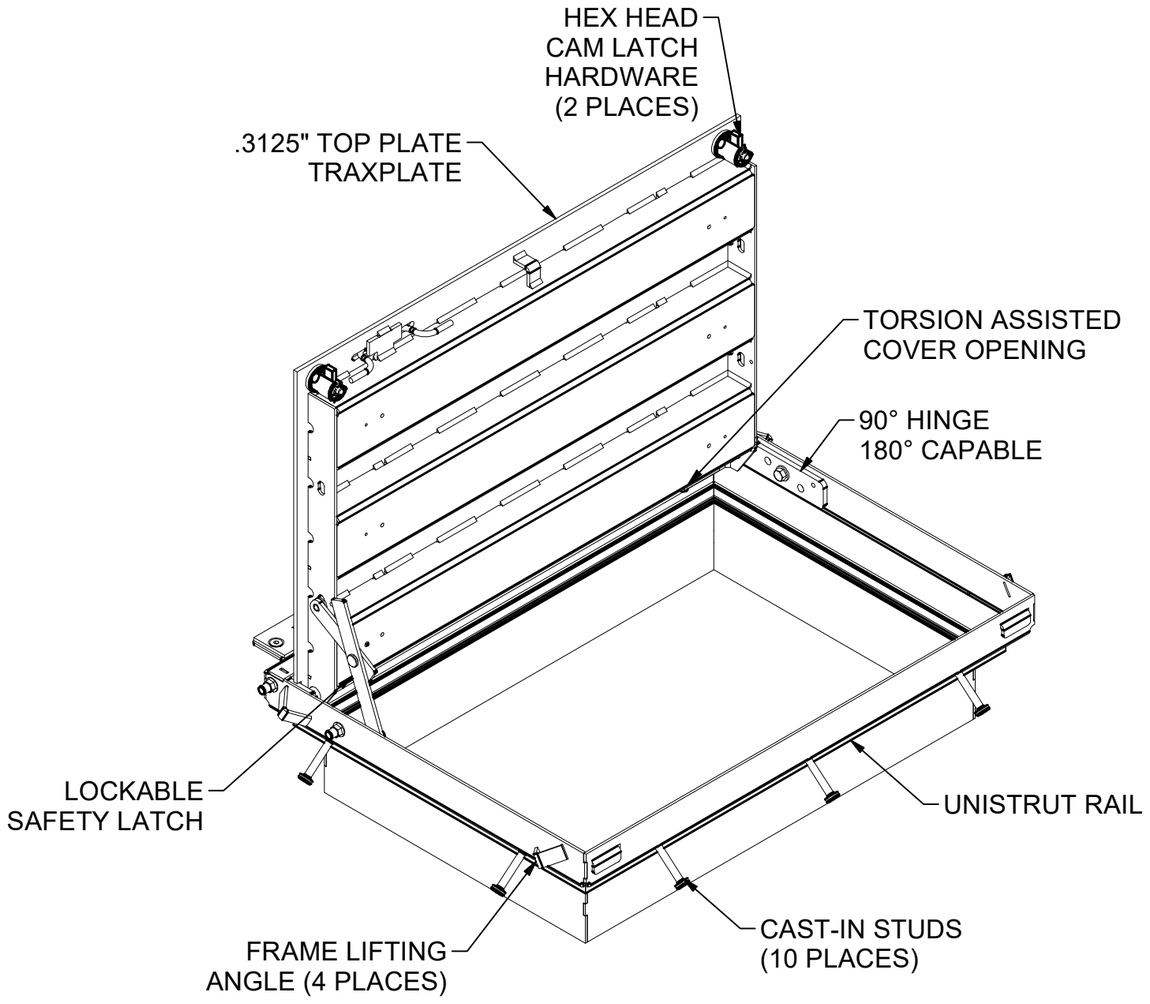

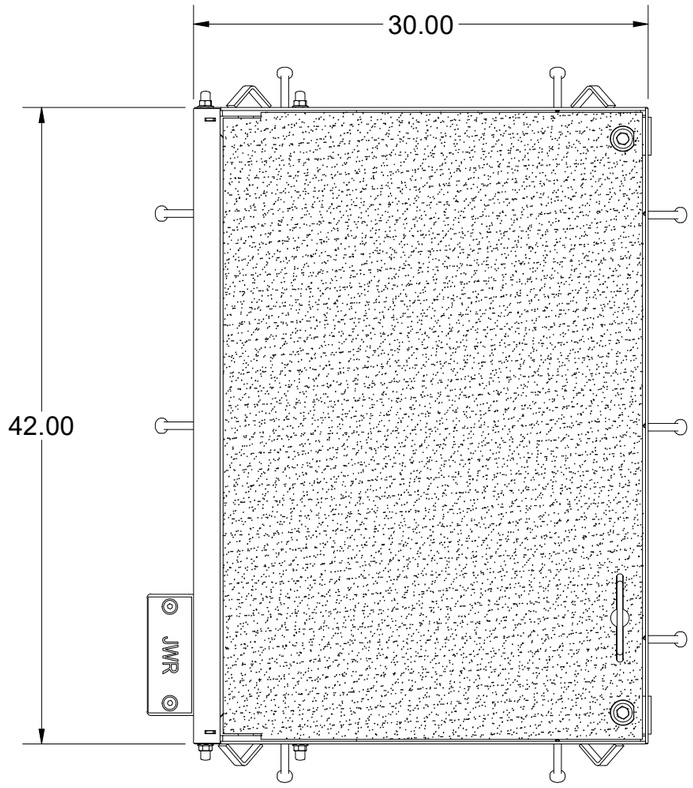

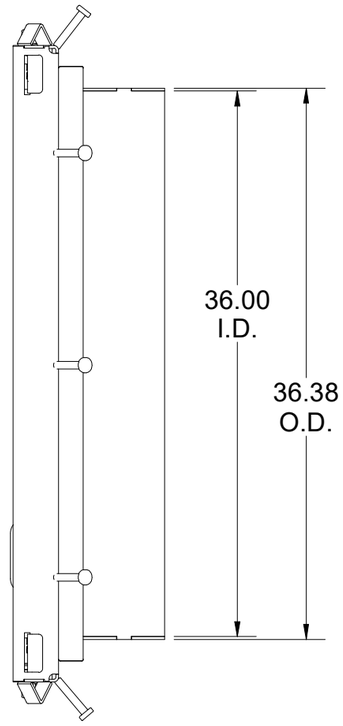

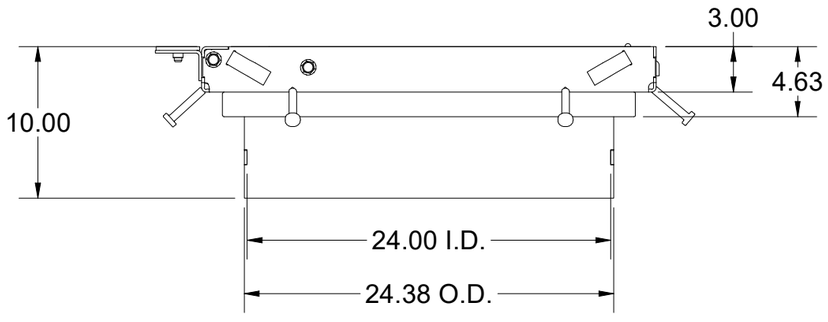

200011543.idw

LOADING CRITERIA: ASTM C1802 Load Level 05

16,000 lb load on 10" x 20" footprint, with 30% impact restricted to unrestricted parking lanes and alleyways where traffic speed is limited to 15 miles per hour.

SURFACE:	TraxPlate™	FINISH:	Galvanized
WEIGHT:	287.4 lbs	MARKING:	None

Infrastructure
JENSEN
527 Dunn Circle, Sparks, NV 89431
775-352-2716 FAX: 755-358-8127
JENSENMETALTECH.COM

©2025 Jensen Infrastructure - All rights reserved.
All materials appearing as Jensen Infrastructure documents and the like are proprietary work product and are protected under U.S. copyright and other laws. Unless in conjunction with business conducted with Jensen Infrastructure , any use of Jensen Infrastructure work product without express, written consent is prohibited, and recipient is prohibited from distributing any and all work product to non-approved third parties under penalty of civil action.
This product shall only be produced in a Jensen Infrastructure facility.

DESCRIPTION:	CAS1-2436-CH5-TRX-G-CL-WR-OH10		
	24x36 Standard Cover Assembly (Loading Criteria Per ASTM C1802 Load Level 05, Steel, Hinged, Handle (1 Per Door), TraxPlate™, Galvanized, N/A, N/A) 10		
PART NUMBER:	200011543	DRAWN BY:	R. Dohr
CREATED:	9/5/2018	MODIFIED:	6/30/2025

REV: B-2-1

SHEET: 1

BILL OF MATERIALS

ITEM	UNIT QTY	QTY	PART NUMBER	DESCRIPTION	PART NAME
1	1	1	200011542	FAS-2436-CH-G-OH10	200011542
2	1	1	200011529	DAS1-SD-2436-H5-TRX-G-CL	200011529
3	1	1	100007659	Hinge Assembly, Left, 1/2, Steel	100007659
4	1	1	100007666	Hinge Assembly, Right, Steel	100007666
5	1	1	100007671	SPRING MOUNT ASSY .500	100007671
6	1	1	100007933	SAFETY LATCH ASSY FOR UNI AND 90 D HINGE	100007933
7	1	2	100003823	BOLT HEX 1/2-13 UNC 1.5 ZINC	100003823
8	1	1	100007727	TORSION HEX ROD 1/2 X 36 RAW	100007727
9	1	2	100007729	HEX NUT SLOTTED CASTLE HEAD 1/2-13 SS	100007729
10	1	2	100007733	BOLT HEX SOCKET FLAT COUNTERSUNK HEAD 1/2-13 UNC 1 GR 5 ZINC-PLATED	100007733
11	1	2	100007857	NUT FINGER 1/2-13 BRASS	100007857
12	1	2	100007859	RIVET NUT 3/8-16 FLAT KNURLED	100007859
13	1	2	100007869	BOLT SHCS 1/2-13 X 1-3/4 SS	100007869
14	1	2	100007873	BOLT SHCS 3/8-16 X 1-1/4 PLATED	100007873
15	1	1	100007876	Bolt Shoulder Socket Head - 3/8-16 UNC - SD-0.5" - SL-0.3125" - Grade 5 - Zinc	100007876
16	1	2	100007915	SPRING COMPRESSION 055 X 5/8 X 7/8 LONG	100007915
17	1	2	100007918	COTTER PIN 0.094DIA X 1-1/4	100007918
18	1	4	100007939	CAP VINYL .467 X 1/2	100007939
19	1	2	100011407	HEX BOLT 1/2-13 UNC 2.25 ZINC, DRILLED	100011407
20	1	4	100011418	WASHER FLAT 1/2 NARROW ZINC	100011418
21	1	1	100007492	HEX NUT NYLOCK - 1/2-13 UNC - GR5 - ZINC	100007492
22	1	4	100026256	LOW-STRENGTH STEEL FLANGE NUT, 1/2" - 13 THREAD SIZE	100026256
23	1	1	100007924	LANYARD 3/64 W/PIN COATED SS	100007924
24	1	1	100007882	Rivet Blind Grip .1875" Large Domed Head Range-0.376-0.5" Steel	100007882
25	1	1	100007420	NAME PLATE STEEL - JWR	100007420

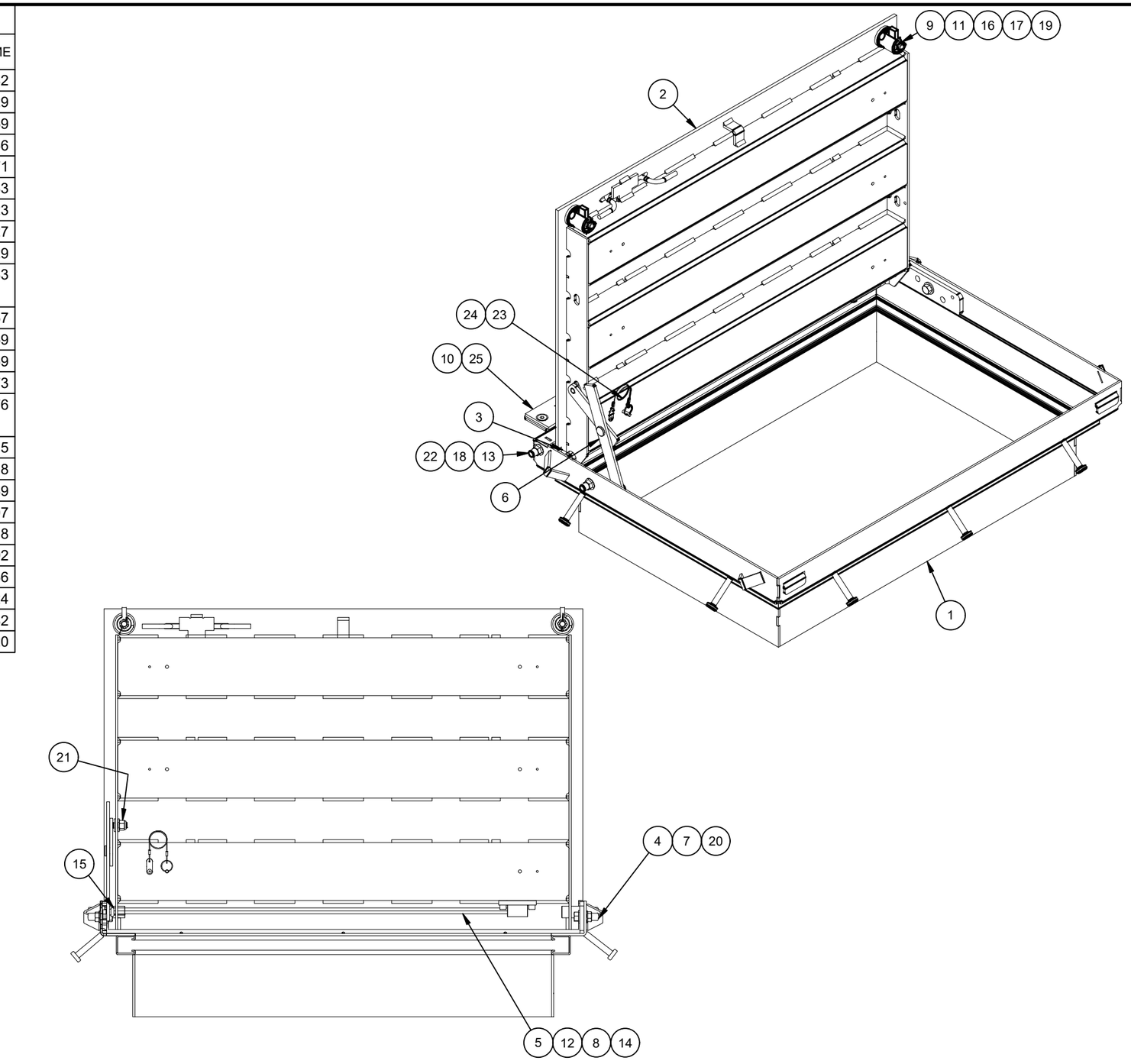

200011543.idw

REVISION HISTORY	
DESCRIPTION	DATE
ECR 57236-2 REPLACED PEM NUTS WITH FLANGE NUTS. ADJUSTED HINGE HOLE DIAMETERS. REPLACED SAFETY LATCH. MOVED HANDLE RETAINER PLATE. REPLACED HINGE HEX SIZE. ADDED WELD INDICATORS/BEADS. UPDATED WELDS AND SIDE BAR THICKNESS	6/16/25
SWAPPED NAMEPLATE TO JWR ENGRAVED VERSION	6/30/2025

MATERIAL FINISH: Galvanized

MATERIAL SURFACE: TraxPlate™

Infrastructure
JENSEN

527 Dunn Circle, Sparks, NV 89431
775-352-2716 FAX: 755-358-8127
JENSENMETALTECH.COM

©2025 Jensen Infrastructure - All rights reserved.
All materials appearing as Jensen Infrastructure documents and the like are proprietary work product and are protected under U.S. copyright and other laws. Unless in conjunction with business conducted with Jensen Infrastructure , any use of Jensen Infrastructure work product without express, written consent is prohibited, and recipient is prohibited from distributing any and all work product to non-approved third parties under penalty of civil action.
This product shall only be produced in a Jensen Infrastructure facility.

PART NUMBER & DESCRIPTION: 200011543
CAS1-2436-CH5-TRX-G-CL-WR-OH10

REV: B-2-1

WEIGHT: 287.4 Lbs

DRAWN BY: R. Dohr

CREATED: 9/5/2018

MODIFIED: 6/30/2025

SHEET: 2

BILL OF MATERIALS

ITEM	UNIT QTY	QTY	PART NUMBER	DESCRIPTION	PART NAME
1	8.519 lbmass	8.519 lbmass	100007734	Frame Component Steel Frame Side, Cast In	200011541
2	1	2	200018691	FRAME BOLT DOUBLER SLOT	200018691
3	8.519 lbmass	8.519 lbmass	100007734	Frame Component Steel Frame Side, Cast In	200011540
4	15.412 lbmass	15.412 lbmass	100007734	Frame Component Steel Frame End, Cast In	200011539
5	12.108 lbmass	12.108 lbmass	100007734	Frame Component Steel Frame End, Adjustable	200011538
6	6.947 lbmass	13.894 lbmass	100007734	Frame Component Steel Skirt Extension	200020383
7	10.308 lbmass	20.616 lbmass	100007734	Frame Component Steel Skirt Extension	200020381
8	1	4	100007641	FRAME LIFTING BRACKET	100007641
9	1	2	100007858	JENSEN PEM Self-Clinching Nuts	100007858
10	1	2	100007637	FRAME LATCH ANGLE - A36 - 2 1/2IN LONG	100007637
11	1	1	100007667	NAME PLATE FRAME ANGLE	100007667
12	1	10	100007886	STUD NELSON WELD H4L-HEADED A36 1/2X3-1/8	100007886
13	27.2500 in	54.5000 in	100007972	UNISTRUT SHORT	200048780
14	39.2000 in	78.4000 in	100007972	UNISTRUT LONG	200048781

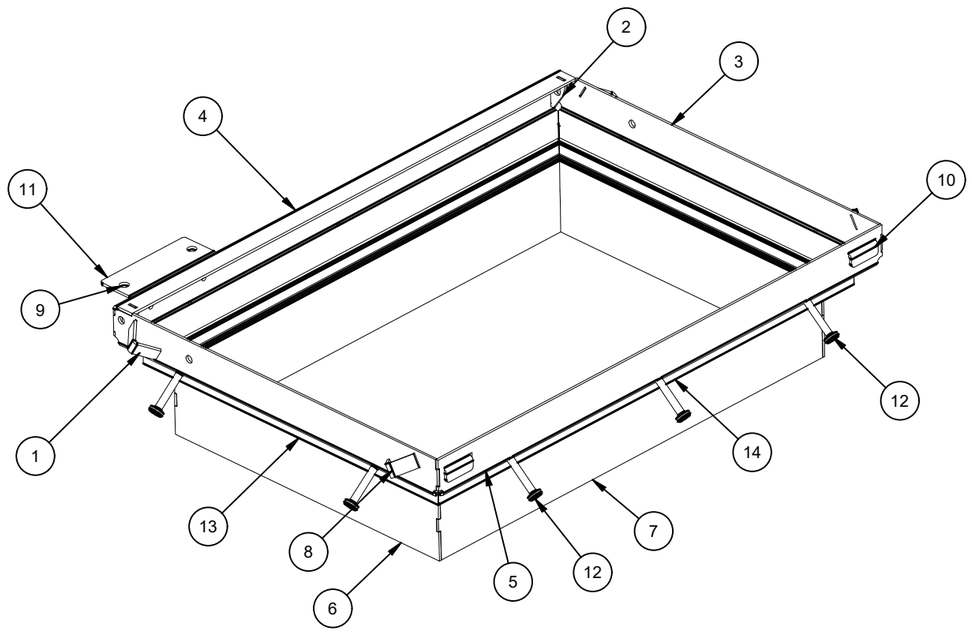

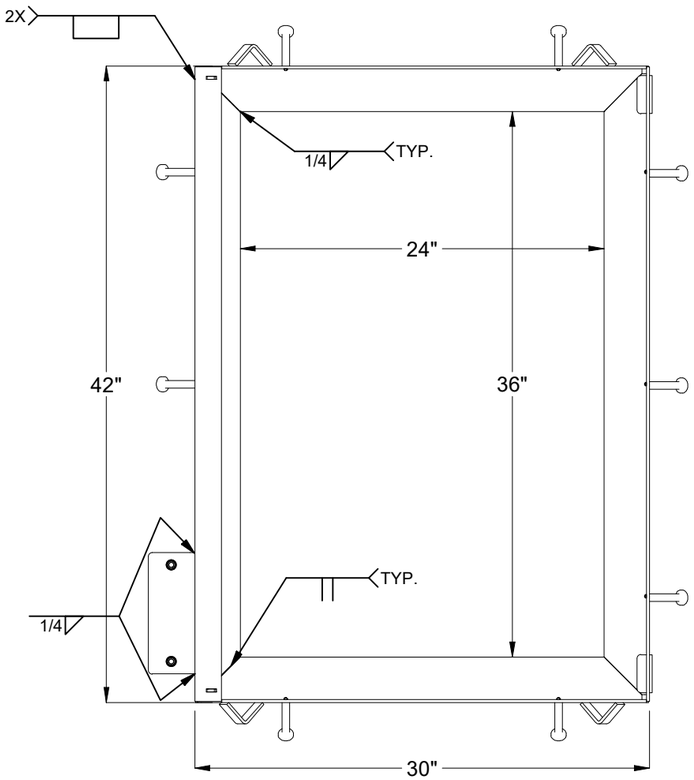

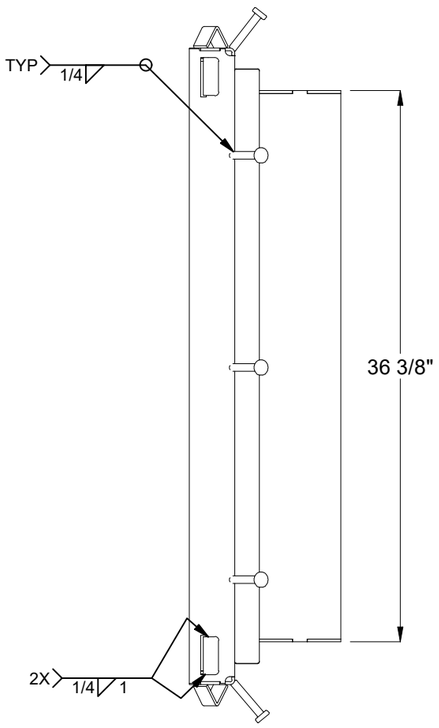

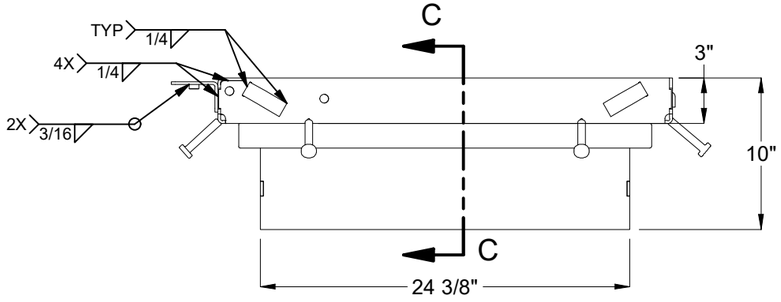

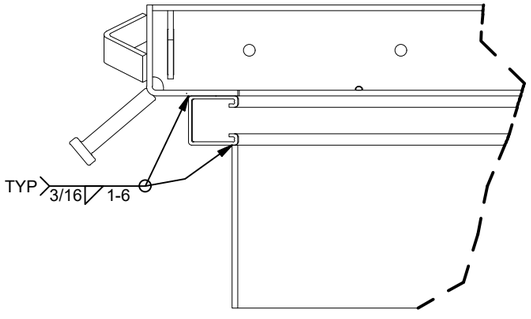

DETAIL C

MATERIAL FINISH: Galvanized	Infrastructure JENSEN 527 Dunn Circle, Sparks, NV 89431 775-352-2716 FAX: 755-358-8127 *JENSENMETALTECH.COM*	©2025 Jensen Infrastructure - All rights reserved. All materials appearing as Jensen Infrastructure documents and the like are proprietary work product and are protected under U.S. copyright and other laws. Unless in conjunction with business conducted with Jensen Infrastructure , any use of Jensen Infrastructure work product without express, written consent is prohibited, and recipient is prohibited from distributing any and all work product to non-approved third parties under penalty of civil action. This product shall only be produced in a Jensen Infrastructure facility.	PART NUMBER & DESCRIPTION: 200011542 FAS-2436-CH-G-OH10	REV: B-2-1
MATERIAL SURFACE: Smooth			WEIGHT: 105.44 Lbs CREATED: 9/5/2018	DRAWN BY: R. Dohr MODIFIED: 6/30/2025	SHEET: 3

200011543.idw

BILL OF MATERIALS

ITEM	UNIT QTY	QTY	PART NUMBER	DESCRIPTION	PART NAME
1	100.698 lbmass	100.698 lbmass	100007835	Door Component Steel Plate, Top	200011530
2	3.076 lbmass	6.153 lbmass	100007734	Door Component Steel Side Bar	200011532
3	19.503 lbmass	58.037 lbmass	100007821	Door Component Steel Channel	200011531
4	1	1	100007644	LEAF PULL HANDLE A36 3/8IN DIAMETER	100007644
5	1	1	100007647	LIFTING BRACKET STEEL LEAF	100007647
6	1	1	100007646	HANDLE RETAINER STL	100007646
7	1	2	100007970	CAM TOWER CAST STEEL	100007970

DESIGN NOTES:
-TOP PLATE GRADE: ASTM A36
-CHANNEL GRADE: ASTM A656 GRADE 80
-BEARING BAR GRADE: ASTM A36
-WELD GRADE: E70

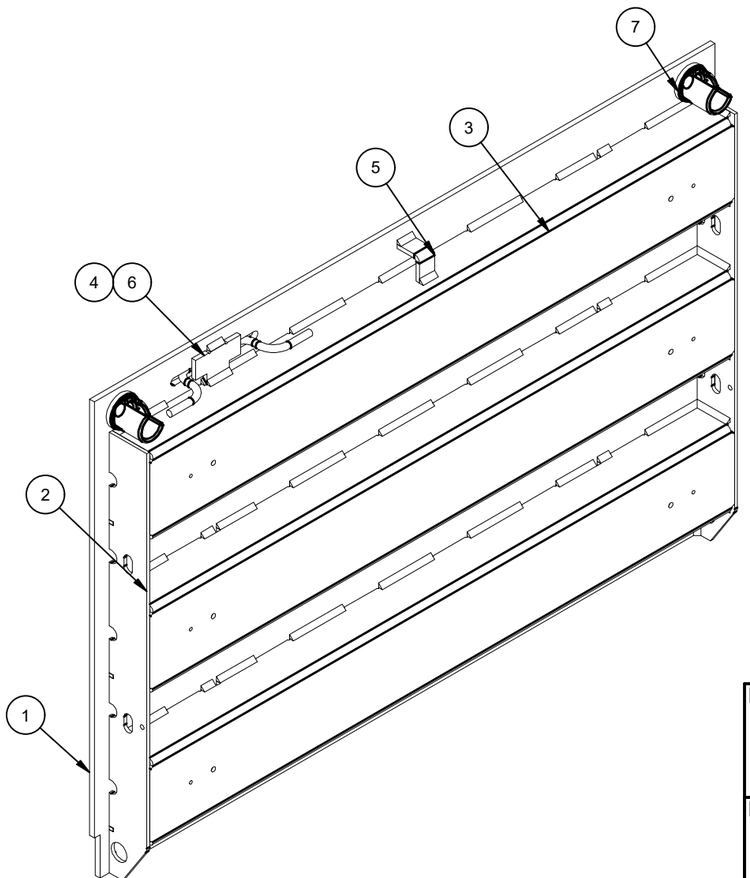

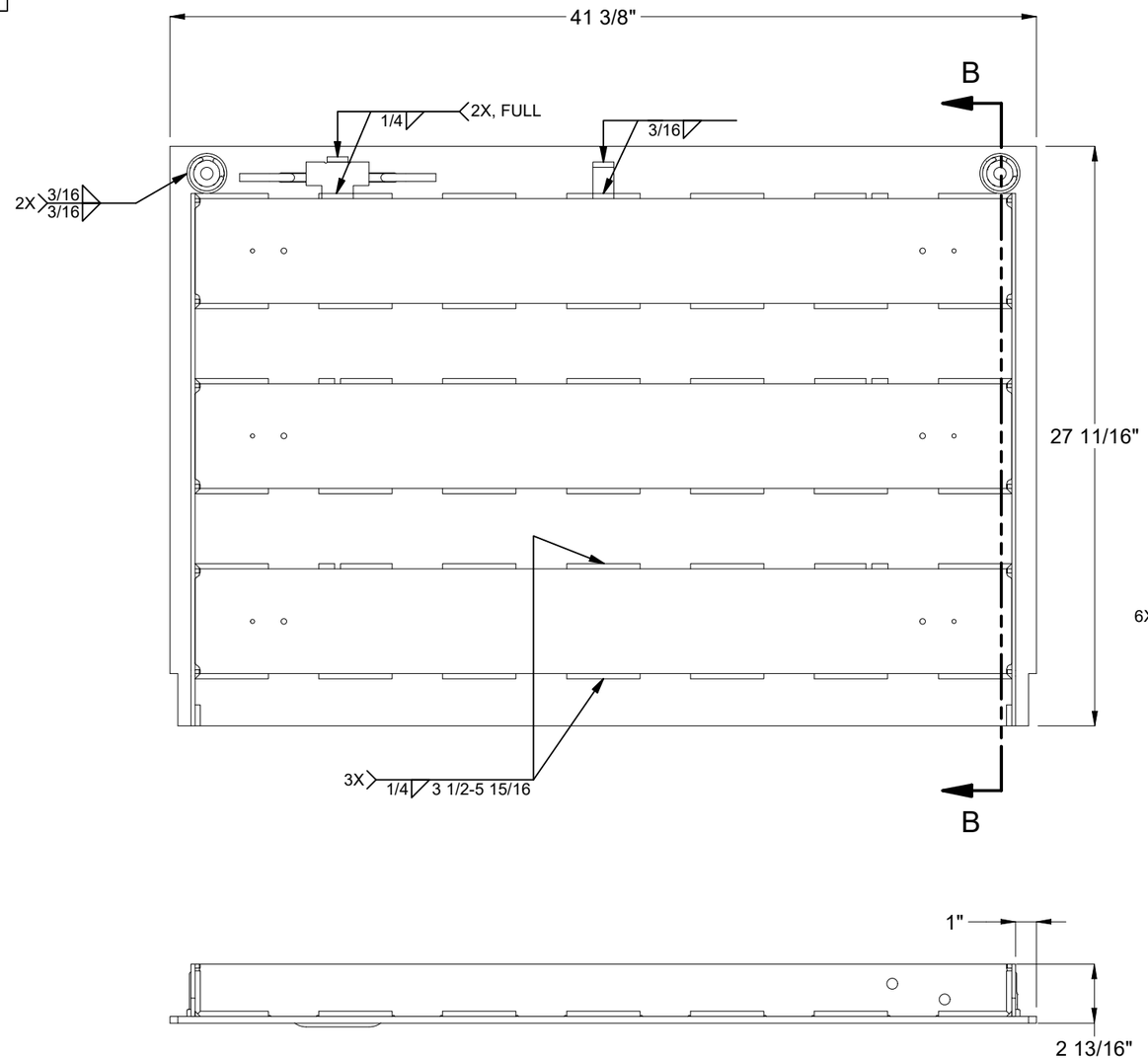

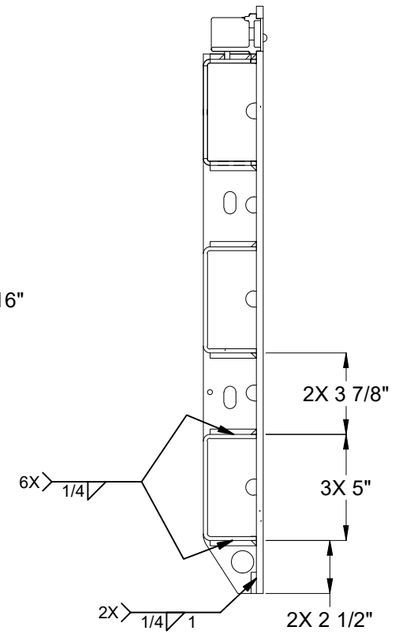

SECTION B-B

MATERIAL FINISH: Galvanized	Infrastructure JENSEN 527 Dunn Circle, Sparks, NV 89431 775-352-2716 FAX: 755-358-8127 *JENSENMETALTECH.COM*	©2025 Jensen Infrastructure - All rights reserved. All materials appearing as Jensen Infrastructure documents and the like are proprietary work product and are protected under U.S. copyright and other laws. Unless in conjunction with business conducted with Jensen Infrastructure , any use of Jensen Infrastructure work product without express, written consent is prohibited, and recipient is prohibited from distributing any and all work product to non-approved third parties under penalty of civil action. This product shall only be produced in a Jensen Infrastructure facility.	PART NUMBER & DESCRIPTION: 200011529 DAS1-SD-2436-H5-TRX-G-CL	REV: B-2-1
MATERIAL SURFACE: TraxPlate™			WEIGHT: 168.69 Lbs CREATED: 9/5/2018	DRAWN BY: R. Dohr MODIFIED: 6/30/2025
				SHEET: 4

200011543.idw

BURN LIST - BOM

PART NAME	ITEM QTY	QTY	DESCRIPTION	STOCK NUMBER	MATERIAL	MASS	SHEET
200011530	1	100.698 lbmass	Door Component Steel Plate, Top	100007835	STL ASTM A36 SM-HRPO RAW .3125	100.698 lbmass	07
200011531	3	58.508 lbmass	Door Component Steel Channel	100007821	SHT STL GR80 SM-HRPO RAW .1875	19.503 lbmass	08
200011532	2	6.153 lbmass	Door Component Steel Side Bar	100007734	STL ASTM A36 SM-HRPO 60X120 RAW .1875	3.076 lbmass	09
200011538	1	12.108 lbmass	Frame Component Steel Frame End, Adjustable	100007734	STL ASTM A36 SM-HRPO 60X120 RAW .1875	12.108 lbmass	10
200011539	1	15.412 lbmass	Frame Component Steel Frame End, Cast In	100007734	STL ASTM A36 SM-HRPO 60X120 RAW .1875	15.412 lbmass	11
200011540	1	8.519 lbmass	Frame Component Steel Frame Side, Cast In	100007734	STL ASTM A36 SM-HRPO 60X120 RAW .1875	8.519 lbmass	12
200011541	1	8.519 lbmass	Frame Component Steel Frame Side, Cast In	100007734	STL ASTM A36 SM-HRPO 60X120 RAW .1875	8.519 lbmass	13
200020381	2	20.616 lbmass	Frame Component Steel Skirt Extension	100007734	STL ASTM A36 SM-HRPO 60X120 RAW .1875	10.308 lbmass	14
200020383	2	13.894 lbmass	Frame Component Steel Skirt Extension	100007734	STL ASTM A36 SM-HRPO 60X120 RAW .1875	6.947 lbmass	15

200011543.idw

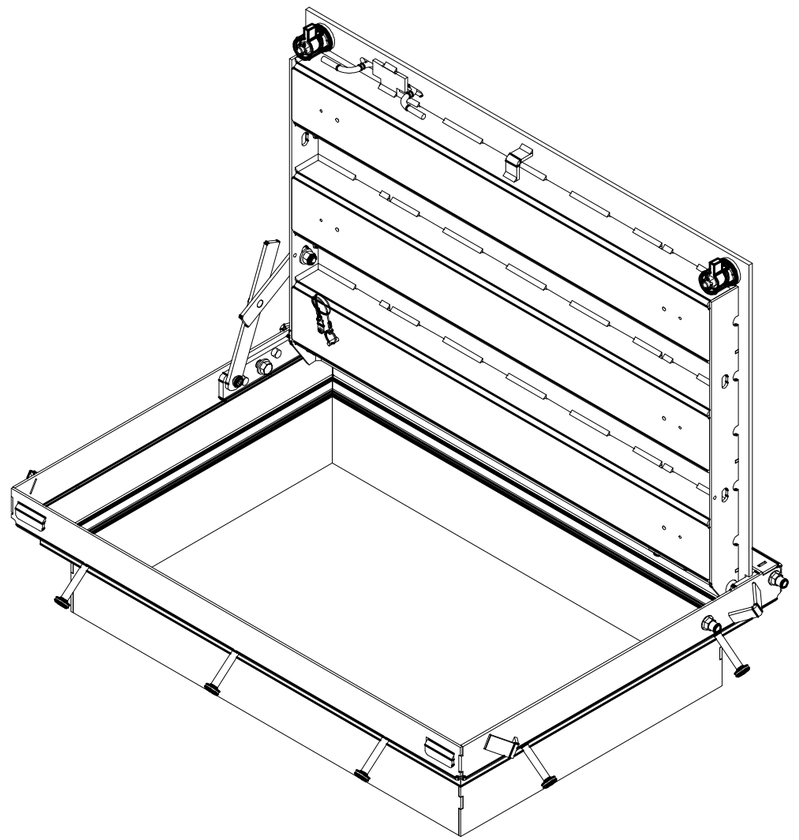

MATERIAL FINISH:
Galvanized

MATERIAL SURFACE:
TraxPlate™

Infrastructure
JENSEN
527 Dunn Circle, Sparks, NV 89431
775-352-2716 FAX: 755-358-8127
JENSENMETALTECH.COM

©2025 Jensen Infrastructure - All rights reserved.
All materials appearing as Jensen Infrastructure documents and the like are proprietary work product and are protected under U.S. copyright and other laws. Unless in conjunction with business conducted with Jensen Infrastructure , any use of Jensen Infrastructure work product without express, written consent is prohibited, and recipient is prohibited from distributing any and all work product to non-approved third parties under penalty of civil action.
This product shall only be produced in a Jensen Infrastructure facility.

PART NUMBER & DESCRIPTION: 200011543
CAS1-2436-CH5-TRX-G-CL-WR-OH10

REV: B-2-1

WEIGHT: 287.4 Lbs

DRAWN BY: R. Dohr

CREATED: 9/5/2018

MODIFIED: 6/30/2025

SHEET: 5

CUT LIST - BOM

PART NAME	PART NUMBER	ITEM QTY	BASE QTY	QTY	DESCRIPTION	MATERIAL	MASS	SHEET
200048780	100007972	2	27.25 in	54.5000 in	UNISTRUT SHORT	Steel, Mild	4.2366 lbmass	16
200048781	100007972	2	39.2 in	78.4000 in	UNISTRUT LONG	Steel, Mild	6.1988 lbmass	17

200011543.idw

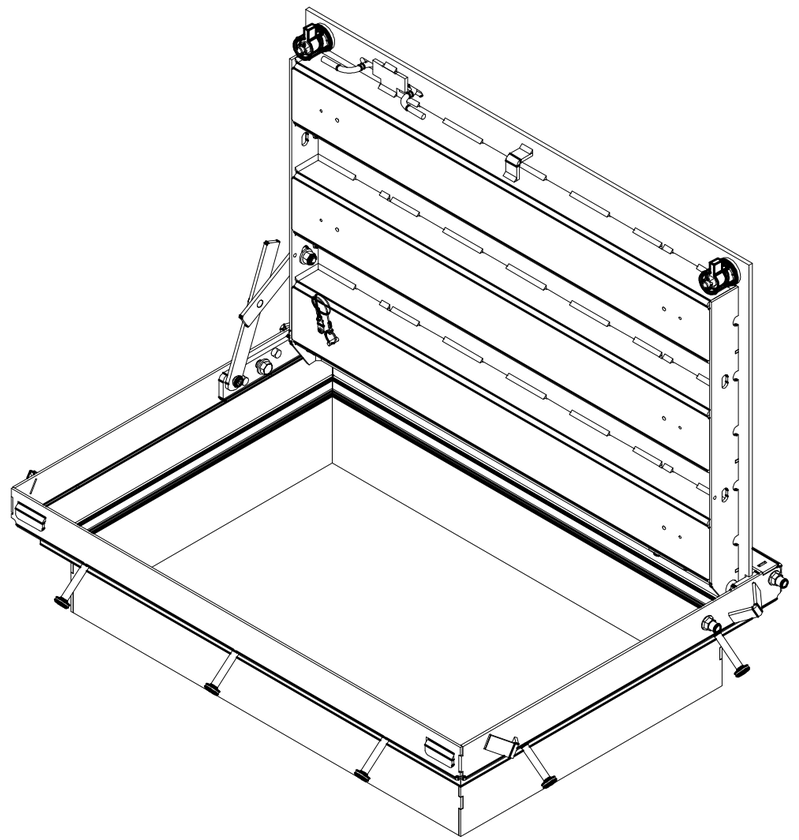

MATERIAL FINISH:
Galvanized

MATERIAL SURFACE:
TraxPlate™

Infrastructure
JENSEN
527 Dunn Circle, Sparks, NV 89431
775-352-2716 FAX: 755-358-8127
JENSENMETALTECH.COM

©2025 Jensen Infrastructure - All rights reserved.
All materials appearing as Jensen Infrastructure documents and the like are proprietary work product and are protected under U.S. copyright and other laws. Unless in conjunction with business conducted with Jensen Infrastructure , any use of Jensen Infrastructure work product without express, written consent is prohibited, and recipient is prohibited from distributing any and all work product to non-approved third parties under penalty of civil action.
This product shall only be produced in a Jensen Infrastructure facility.

PART NUMBER & DESCRIPTION: 200011543
CAS1-2436-CH5-TRX-G-CL-WR-OH10

REV: B-2-1

WEIGHT: 287.4 Lbs

DRAWN BY: R. Dohr

CREATED: 9/5/2018

MODIFIED: 6/30/2025

SHEET: 6

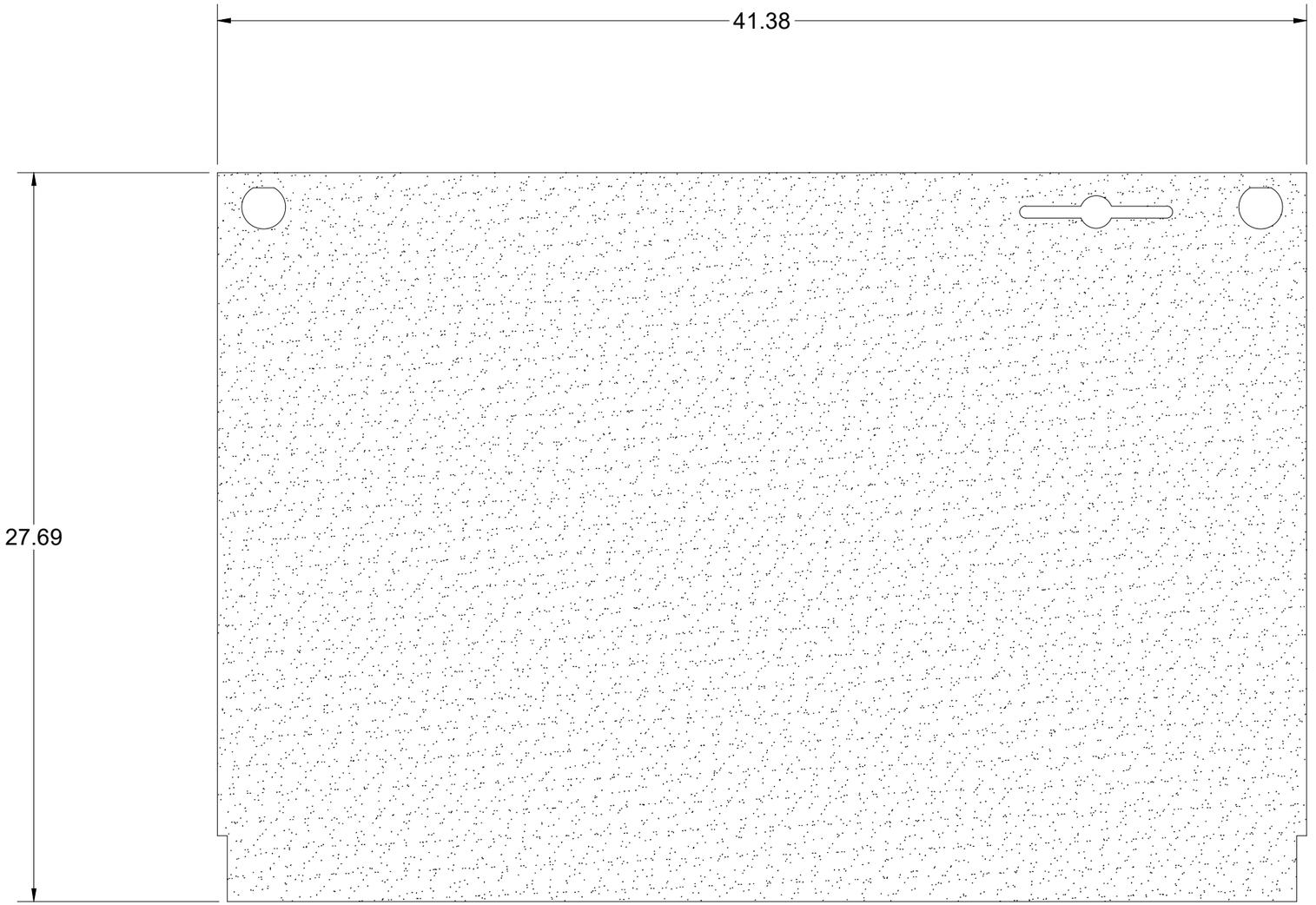

BEND TABLE			
BEND RADIUS	V-OPENING	BEND ANGLE	BEND DEDUCTION
-	-	-	-

MATERIAL IFS: 100007835

MATERIAL THK: 0.3125

MAT DESCRIPTION: STL ASTM A36 SM-HRPO RAW .3125

Infrastructure JENSEN
527 Dunn Circle, Sparks, NV 89431
775-352-2716 FAX: 755-358-8127
JENSENMETALTECH.COM

©2025 Jensen Infrastructure - All rights reserved.
All materials appearing as Jensen Infrastructure documents and the like are proprietary work product and are protected under U.S. copyright and other laws. Unless in conjunction with business conducted with Jensen Infrastructure , any use of Jensen Infrastructure work product without express, written consent is prohibited, and recipient is prohibited from distributing any and all work product to non-approved third parties under penalty of civil action.
This product shall only be produced in a Jensen Infrastructure facility.

NAME & DESCRIPTION: 200011530 Door Component Steel Plate, Top

REV: B-2-1

WEIGHT: 100.698 lbmass

DRAWN BY: R. Dohr

CREATED: 9/5/2018

MODIFIED: 6/30/2025

SHEET: 7 OF 17

200011543.idw

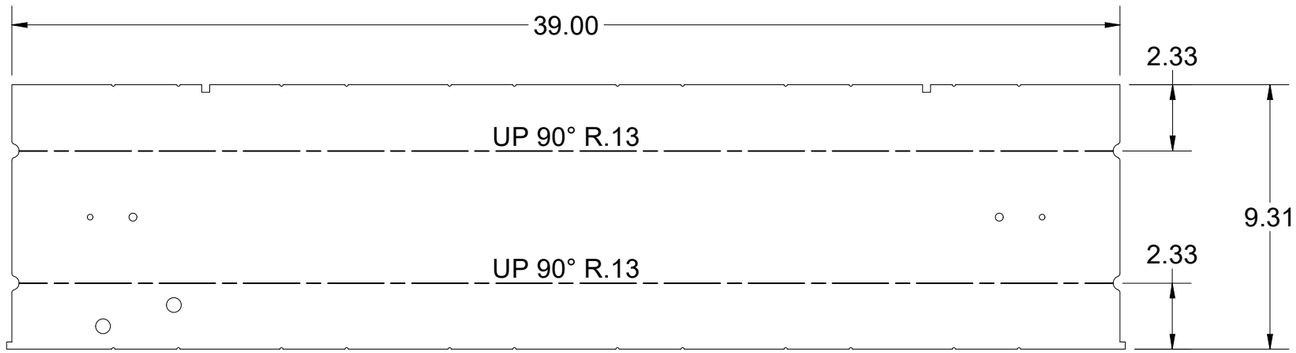

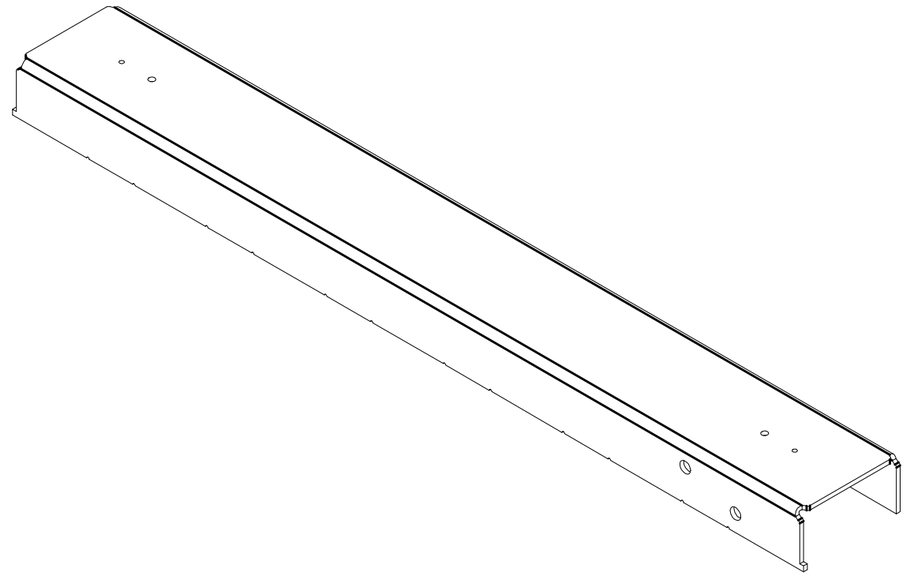

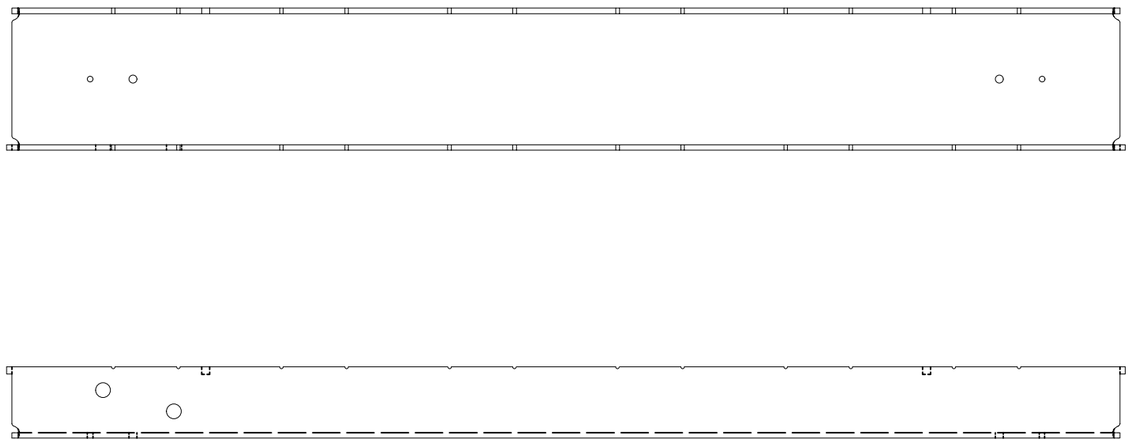

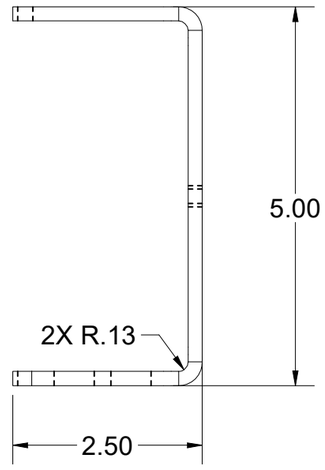

BEND TABLE			
BEND RADIUS	V-OPENING	BEND ANGLE	BEND DEDUCTION
0.125	2	90	0.345

MATERIAL IFS: 100007821

MATERIAL THK: 0.1875

MAT DESCRIPTION: SHT STL GR80 SM-HRPO RAW .1875

Infrastructure
JENSEN
527 Dunn Circle, Sparks, NV 89431
775-352-2716 FAX: 755-358-8127
JENSENMETALTECH.COM

©2025 Jensen Infrastructure - All rights reserved.
All materials appearing as Jensen Infrastructure documents and the like are proprietary work product and are protected under U.S. copyright and other laws. Unless in conjunction with business conducted with Jensen Infrastructure , any use of Jensen Infrastructure work product without express, written consent is prohibited, and recipient is prohibited from distributing any and all work product to non-approved third parties under penalty of civil action.
This product shall only be produced in a Jensen Infrastructure facility.

NAME & DESCRIPTION: 200011531 Door Component Steel Channel

REV: B-2-1

WEIGHT: 19.503 lbmass

DRAWN BY: R. Dohr

CREATED: 9/5/2018

MODIFIED: 6/30/2025

SHEET: 8 OF 17

200011543.idw

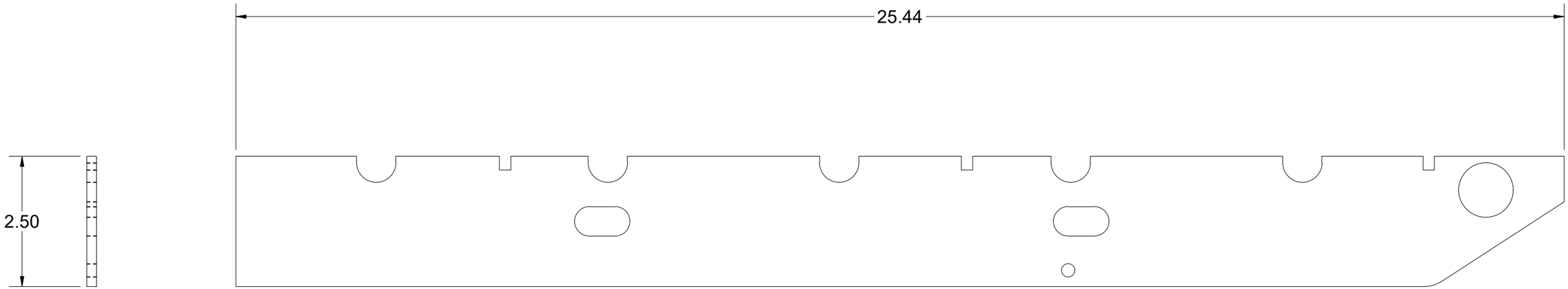

BEND TABLE				MATERIAL IFS: 100007734			
BEND RADIUS	V-OPENING	BEND ANGLE	BEND DEDUCTION	MATERIAL THK: 0.1875			
-	-	- 0	-	MAT DESCRIPTION: STL ASTM A36 SM-HRPO 60X120 RAW .1875			

Infrastructure
JENSEN
527 Dunn Circle, Sparks, NV 89431
775-352-2716 FAX: 755-358-8127
JENSENMETALTECH.COM

©2025 Jensen Infrastructure - All rights reserved.
All materials appearing as Jensen Infrastructure documents and the like are proprietary work product and are protected under U.S. copyright and other laws. Unless in conjunction with business conducted with Jensen Infrastructure , any use of Jensen Infrastructure work product without express, written consent is prohibited, and recipient is prohibited from distributing any and all work product to non-approved third parties under penalty of civil action.
This product shall only be produced in a Jensen Infrastructure facility.

NAME & DESCRIPTION: 200011532 Door Component Steel Side Bar		REV: B-2-1
WEIGHT: 3.076 lbmass	DRAWN BY: R. Dohr	SHEET: 9 OF 17
CREATED: 9/5/2018	MODIFIED: 6/30/2025	

200011543.idw

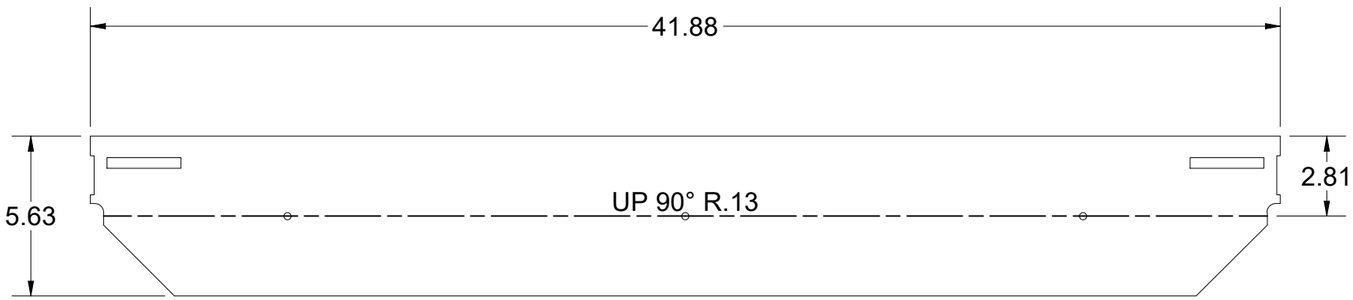

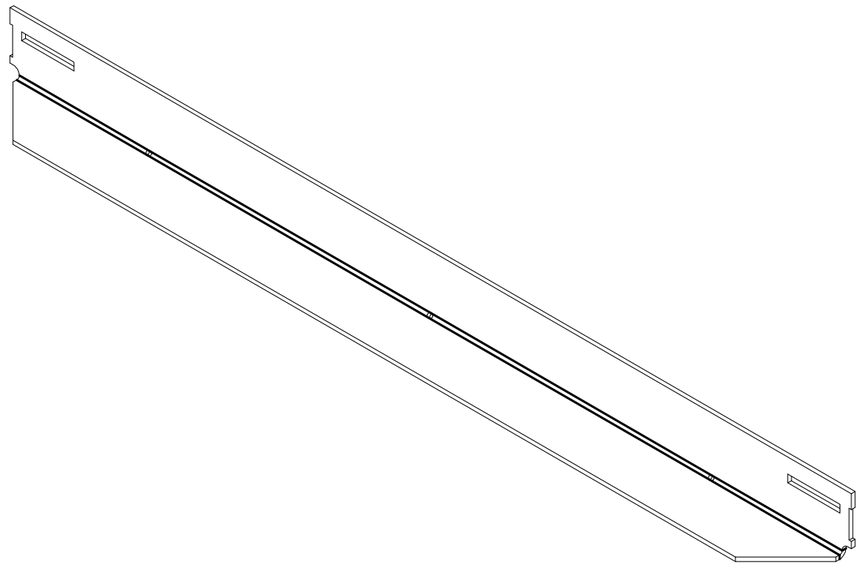

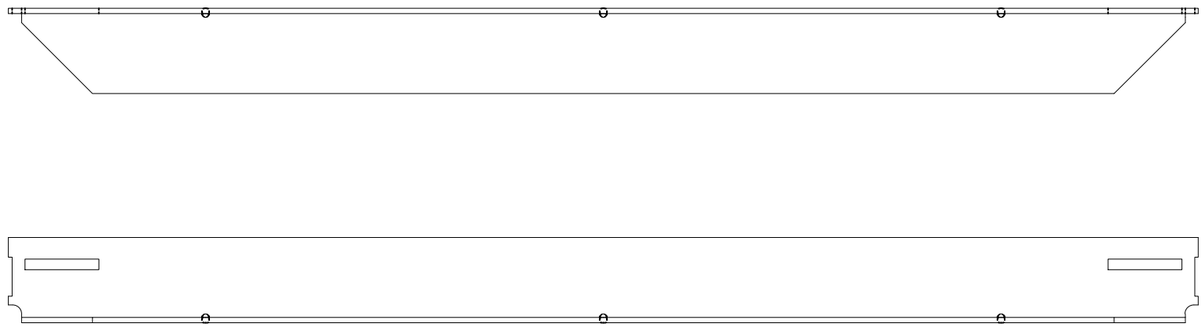

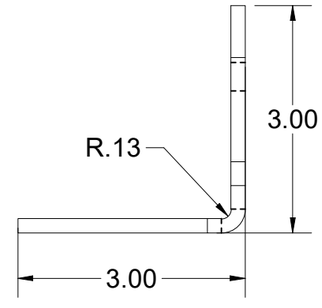

BEND TABLE				MATERIAL IFS: 100007734
BEND RADIUS	V-OPENING	BEND ANGLE	BEND DEDUCTION	MATERIAL THK: 0.1875
0.125	2	90	0.3750	MAT DESCRIPTION: STL ASTM A36 SM-HRPO 60X120 RAW .1875

Infrastructure
JENSEN
527 Dunn Circle, Sparks, NV 89431
775-352-2716 FAX: 755-358-8127
JENSENMETALTECH.COM

©2025 Jensen Infrastructure - All rights reserved.
All materials appearing as Jensen Infrastructure documents and the like are proprietary work product and are protected under U.S. copyright and other laws. Unless in conjunction with business conducted with Jensen Infrastructure , any use of Jensen Infrastructure work product without express, written consent is prohibited, and recipient is prohibited from distributing any and all work product to non-approved third parties under penalty of civil action.
This product shall only be produced in a Jensen Infrastructure facility.

NAME & DESCRIPTION: 200011538 Frame Component Steel Frame End, Adjustable		REV: B-2-1
WEIGHT: 12.108 lbmass	DRAWN BY: R. Dohr	SHEET: 10 OF 17
CREATED: 9/5/2018	MODIFIED: 6/30/2025	

200011543.idw

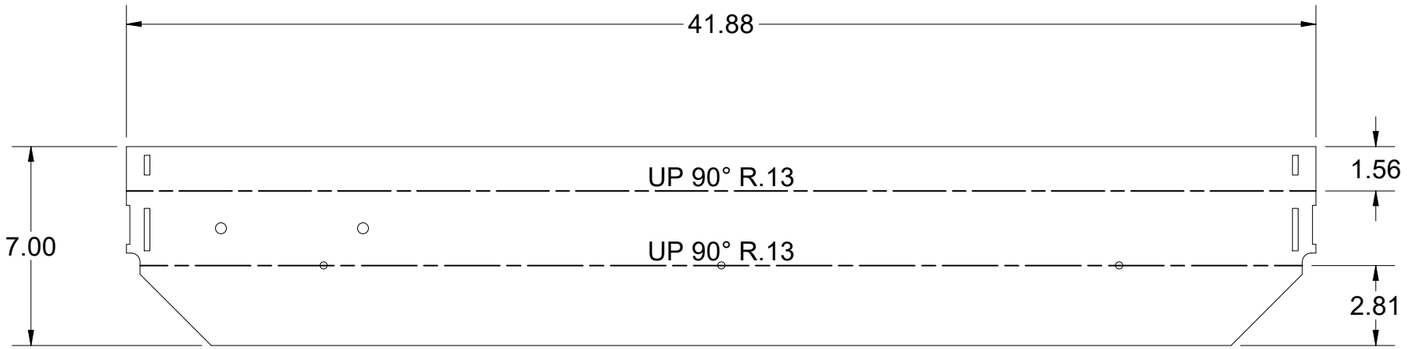

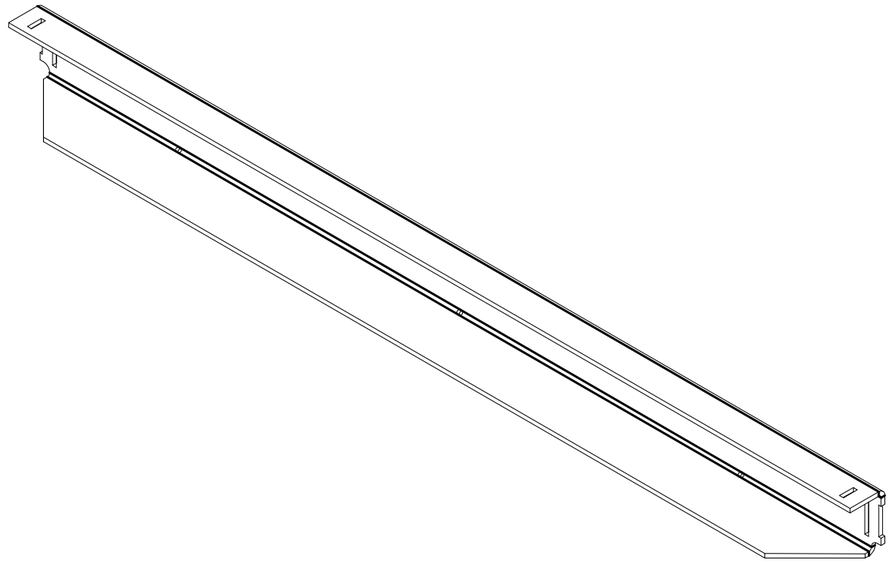

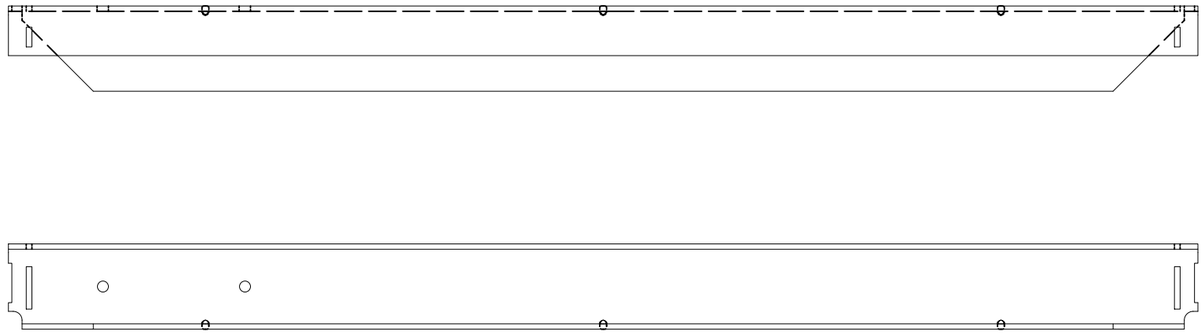

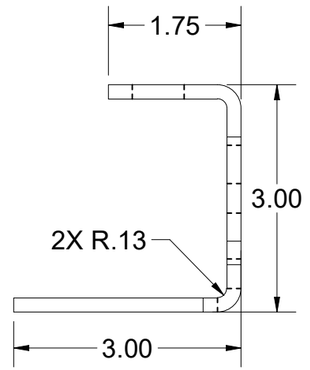

BEND TABLE				MATERIAL IFS: 100007734
BEND RADIUS	V-OPENING	BEND ANGLE	BEND DEDUCTION	MATERIAL THK: 0.1875
0.125	2	90	0.3750	MAT DESCRIPTION: STL ASTM A36 SM-HRPO 60X120 RAW .1875

Infrastructure
JENSEN
527 Dunn Circle, Sparks, NV 89431
775-352-2716 FAX: 755-358-8127
JENSENMETALTECH.COM

©2025 Jensen Infrastructure - All rights reserved.
All materials appearing as Jensen Infrastructure documents and the like are proprietary work product and are protected under U.S. copyright and other laws. Unless in conjunction with business conducted with Jensen Infrastructure , any use of Jensen Infrastructure work product without express, written consent is prohibited, and recipient is prohibited from distributing any and all work product to non-approved third parties under penalty of civil action.
This product shall only be produced in a Jensen Infrastructure facility.

NAME & DESCRIPTION: 200011539 Frame Component Steel Frame End, Cast In		REV: B-2-1
WEIGHT: 15.412 lbmass	DRAWN BY: R. Dohr	SHEET: 11 OF 17
CREATED: 9/5/2018	MODIFIED: 6/30/2025	

200011543.idw

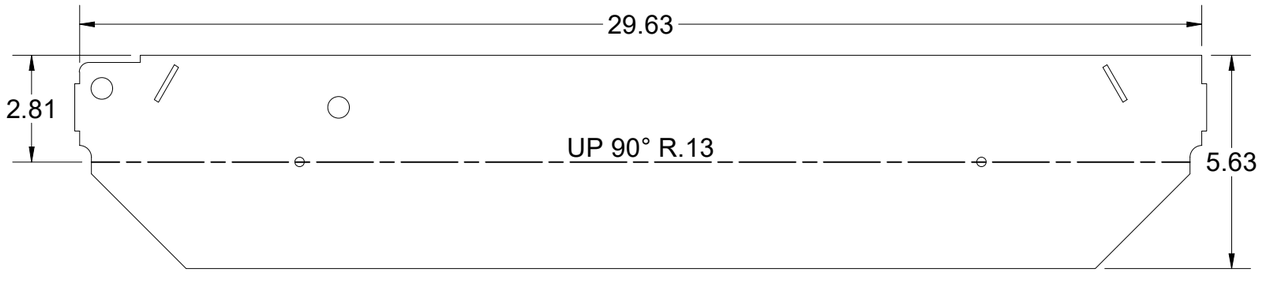

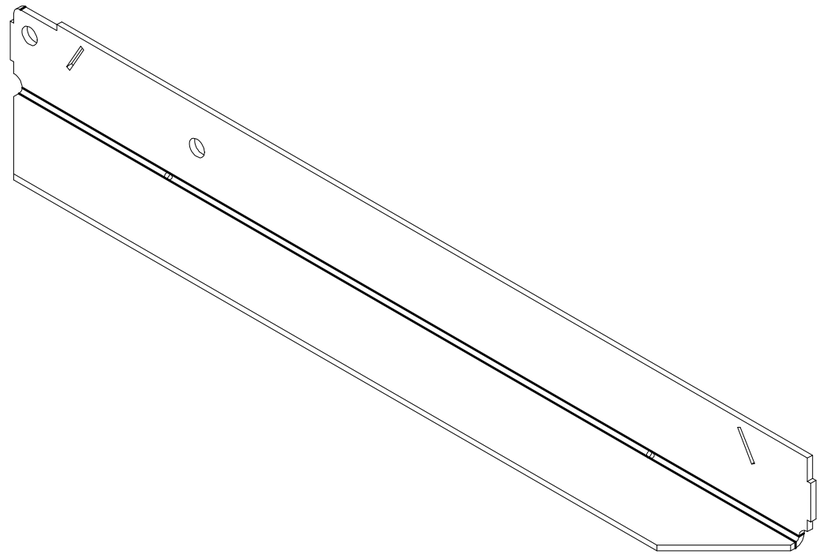



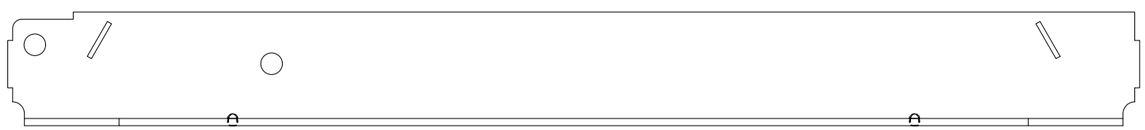

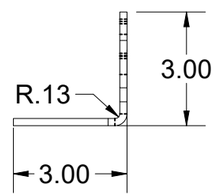

200011543.idw

BEND TABLE				MATERIAL IFS: 100007734
BEND RADIUS	V-OPENING	BEND ANGLE	BEND DEDUCTION	MATERIAL THK: 0.1875
0.125	2	90	0.3750	MAT DESCRIPTION: STL ASTM A36 SM-HRPO 60X120 RAW .1875

Infrastructure
JENSEN
527 Dunn Circle, Sparks, NV 89431
775-352-2716 FAX: 755-358-8127
JENSENMETALTECH.COM

©2025 Jensen Infrastructure - All rights reserved.
All materials appearing as Jensen Infrastructure documents and the like are proprietary work product and are protected under U.S. copyright and other laws. Unless in conjunction with business conducted with Jensen Infrastructure , any use of Jensen Infrastructure work product without express, written consent is prohibited, and recipient is prohibited from distributing any and all work product to non-approved third parties under penalty of civil action.
This product shall only be produced in a Jensen Infrastructure facility.

NAME & DESCRIPTION: 200011540 Frame Component Steel Frame Side, Cast In		REV: B-2-1
WEIGHT: 8.519 lbmass	DRAWN BY: R. Dohr	SHEET: 12 OF 17
CREATED: 9/5/2018	MODIFIED: 6/30/2025	

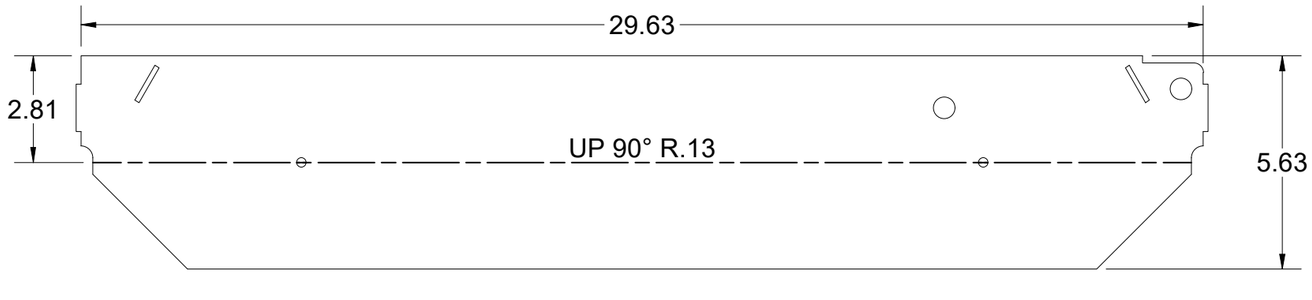



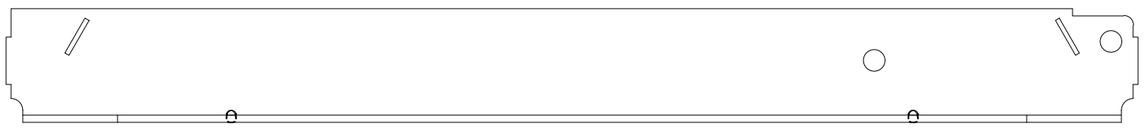

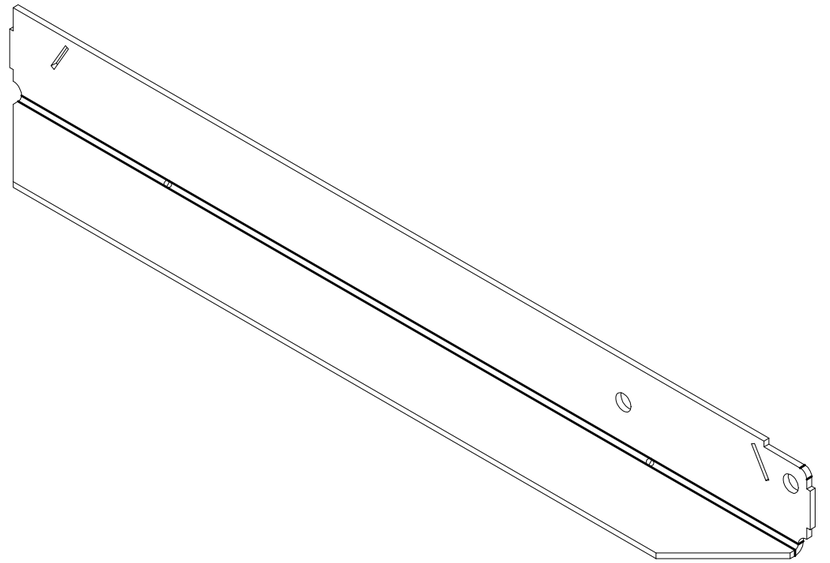

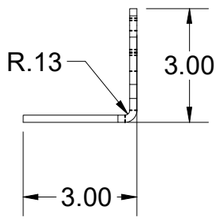

BEND TABLE			
BEND RADIUS	V-OPENING	BEND ANGLE	BEND DEDUCTION
0.125	2	90	0.3750

MATERIAL IFS: 100007734

MATERIAL THK: 0.1875

MAT DESCRIPTION: STL ASTM A36 SM-HRPO 60X120 RAW .1875

Infrastructure
JENSEN
527 Dunn Circle, Sparks, NV 89431
775-352-2716 FAX: 755-358-8127
JENSENMETALTECH.COM

©2025 Jensen Infrastructure - All rights reserved.
All materials appearing as Jensen Infrastructure documents and the like are proprietary work product and are protected under U.S. copyright and other laws.
Unless in conjunction with business conducted with Jensen Infrastructure , any use of Jensen Infrastructure work product without express, written consent is prohibited, and recipient is prohibited from distributing any and all work product to non-approved third parties under penalty of civil action.
This product shall only be produced in a Jensen Infrastructure facility.

NAME & DESCRIPTION: 200011541
Frame Component Steel Frame Side, Cast In

REV: B-2-1

WEIGHT: 8.519 lbmass

DRAWN BY: R. Dohr

CREATED: 9/5/2018

MODIFIED: 6/30/2025

SHEET: 13 OF 17

200011543.idw

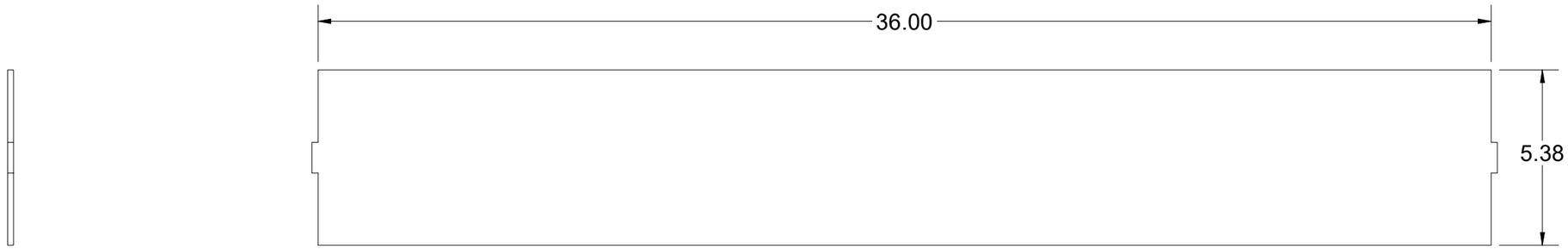

BEND TABLE				MATERIAL IFS: 100007734
BEND RADIUS	V-OPENING	BEND ANGLE	BEND DEDUCTION	MATERIAL THK: 0.1875
-	-	-	-	MAT DESCRIPTION: STL ASTM A36 SM-HRPO 60X120 RAW .1875

Infrastructure
JENSEN
527 Dunn Circle, Sparks, NV 89431
775-352-2716 FAX: 755-358-8127
JENSENMETALTECH.COM

©2025 Jensen Infrastructure - All rights reserved.
All materials appearing as Jensen Infrastructure documents and the like are proprietary work product and are protected under U.S. copyright and other laws. Unless in conjunction with business conducted with Jensen Infrastructure , any use of Jensen Infrastructure work product without express, written consent is prohibited, and recipient is prohibited from distributing any and all work product to non-approved third parties under penalty of civil action.
This product shall only be produced in a Jensen Infrastructure facility.

NAME & DESCRIPTION: 200020381 Frame Component Steel Skirt Extension		REV: B-2-1
WEIGHT: 10.308 lbmass	DRAWN BY: R. Dohr	SHEET: 14 OF 17
CREATED: 9/5/2018	MODIFIED: 6/30/2025	

200011543.idw

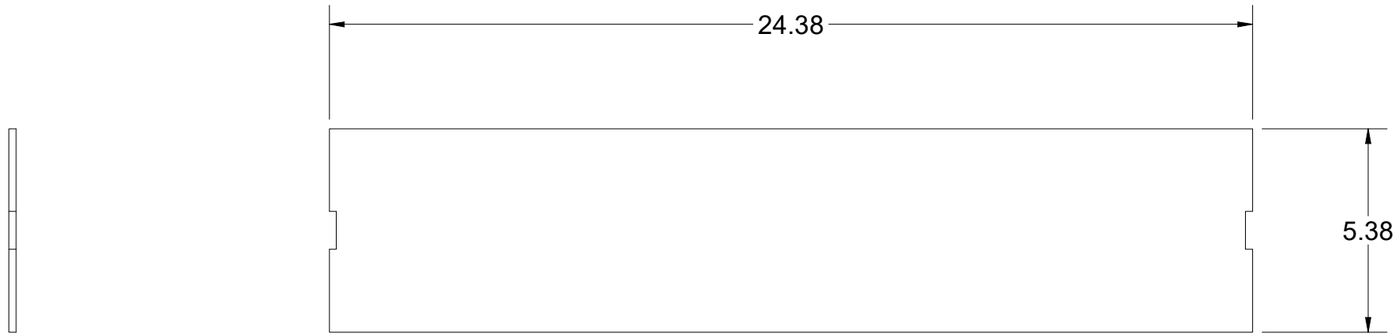

BEND TABLE				MATERIAL IFS: 100007734
BEND RADIUS	V-OPENING	BEND ANGLE	BEND DEDUCTION	MATERIAL THK: 0.1875
-	-	-	-	MAT DESCRIPTION: STL ASTM A36 SM-HRPO 60X120 RAW .1875

Infrastructure
JENSEN
527 Dunn Circle, Sparks, NV 89431
775-352-2716 FAX: 755-358-8127
JENSENMETALTECH.COM

©2025 Jensen Infrastructure - All rights reserved.
All materials appearing as Jensen Infrastructure documents and the like are proprietary work product and are protected under U.S. copyright and other laws. Unless in conjunction with business conducted with Jensen Infrastructure , any use of Jensen Infrastructure work product without express, written consent is prohibited, and recipient is prohibited from distributing any and all work product to non-approved third parties under penalty of civil action.
This product shall only be produced in a Jensen Infrastructure facility.

NAME & DESCRIPTION: 200020383 Frame Component Steel Skirt Extension		REV: B-2-1
WEIGHT: 6.947 lbmass	DRAWN BY: R. Dohr	SHEET: 15 OF 17
CREATED: 9/5/2018	MODIFIED: 6/30/2025	

200011543.idw

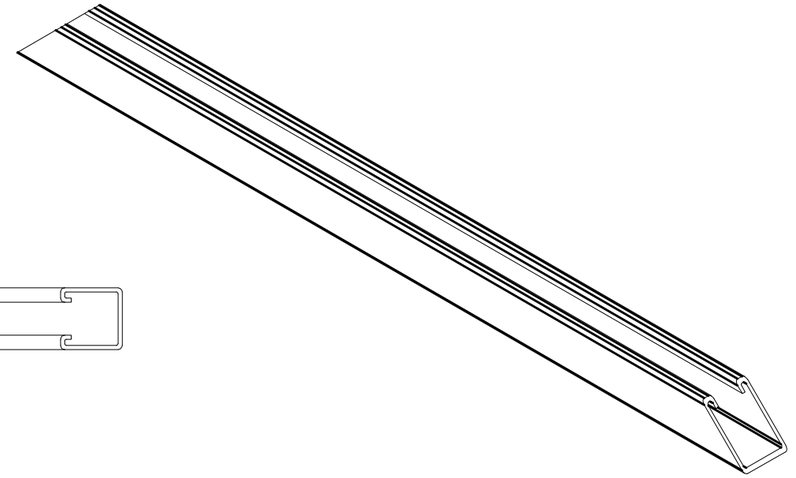

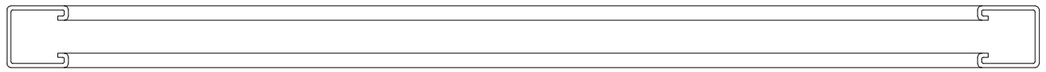

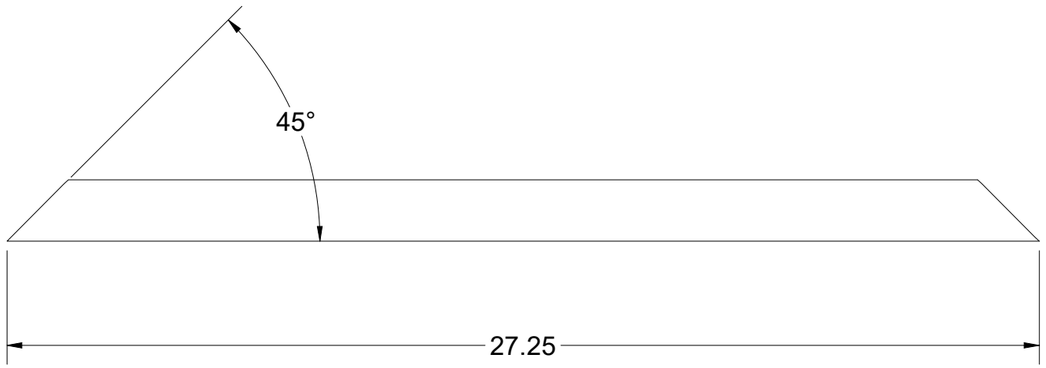

200011543.idw

BEND TABLE				MATERIAL IFS: 100007972				
BEND RADIUS	V-OPENING	BEND ANGLE	BEND DEDUCTION	MATERIAL THK:				
				MAT DESCRIPTION: Steel, Mild				

Infrastructure
JENSEN
527 Dunn Circle, Sparks, NV 89431
775-352-2716 FAX: 755-358-8127
JENSENMETALTECH.COM

©2025 Jensen Infrastructure - All rights reserved.
All materials appearing as Jensen Infrastructure documents and the like are proprietary work product and are protected under U.S. copyright and other laws. Unless in conjunction with business conducted with Jensen Infrastructure , any use of Jensen Infrastructure work product without express, written consent is prohibited, and recipient is prohibited from distributing any and all work product to non-approved third parties under penalty of civil action.
This product shall only be produced in a Jensen Infrastructure facility.

NAME & DESCRIPTION: 200048780 UNISTRUT SHORT		REV: B-2-1
WEIGHT: 4.237 lbmass	DRAWN BY: R. Dohr	SHEET: 16 OF 17
CREATED: 9/5/2018	MODIFIED: 6/30/2025	

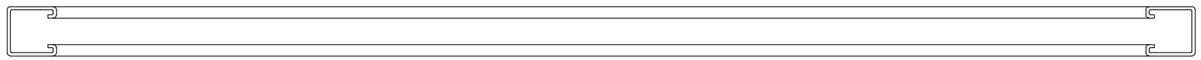

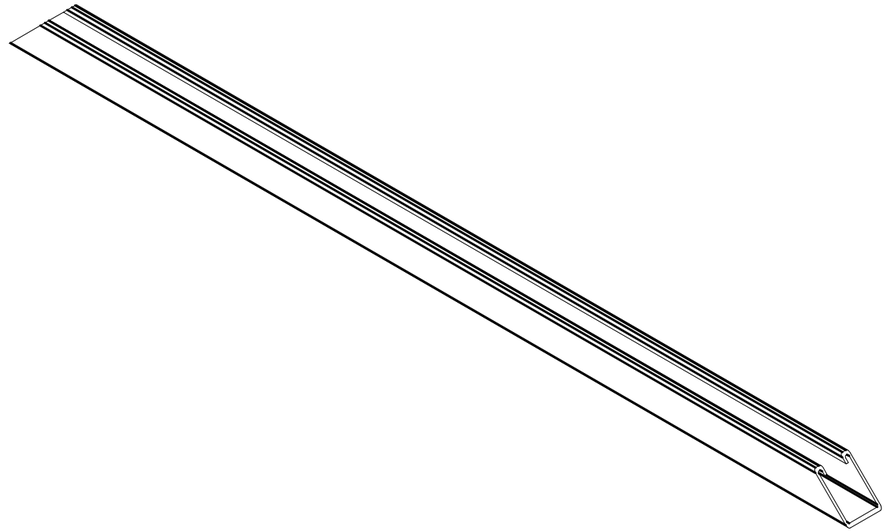

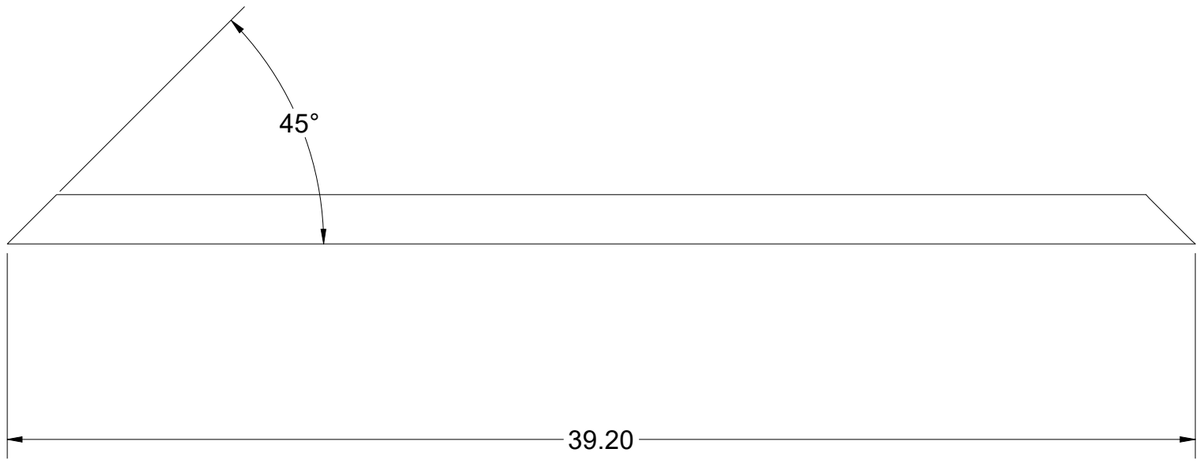

BEND TABLE				MATERIAL IFS: 100007972	Infrastructure JENSEN	©2025 Jensen Infrastructure - All rights reserved. All materials appearing as Jensen Infrastructure documents and the like are proprietary work product and are protected under U.S. copyright and other laws. Unless in conjunction with business conducted with Jensen Infrastructure , any use of Jensen Infrastructure work product without express, written consent is prohibited, and recipient is prohibited from distributing any and all work product to non-approved third parties under penalty of civil action. This product shall only be produced in a Jensen Infrastructure facility.	NAME & DESCRIPTION: 200048781 UNISTRUT LONG		REV: B-2-1
BEND RADIUS	V-OPENING	BEND ANGLE	BEND DEDUCTION	MATERIAL THK:					
				MAT DESCRIPTION: Steel, Mild	527 Dunn Circle, Sparks, NV 89431 775-352-2716 FAX: 755-358-8127 *JENSENMETALTECH.COM*		WEIGHT: 6.199 lbmass	DRAWN BY: R. Dohr	SHEET: 17 OF 17
							CREATED: 9/5/2018	MODIFIED: 6/30/2025	

200011543.idw