NOTES
■ DESIGN LOAD: TRAFFIC RATED WHEN INSTALLED PER CALTRANS ES-8B
■ FOR COMPLETE DESIGN AND PRODUCT INFORMATION CONTACT JENSEN PRECAST.

BILL OF MATERIALS

ITEM	UNIT QTY	QTY	PART NUMBER	DESCRIPTION
1	1.920 ft^3	1.920 ft^3	100011426	CONCRETE MIX GENERIC 5500 PSI
2	1	1	100005486	HTFAS-1730-CD-G
3	1	2	100004449	BOLT PENTA 1/2-13 UNC 0.875 HEAD 1L SS
4	1	2	100002785	INSERT THREADED METAL 1/2-13 UNC 1-1/2 IN

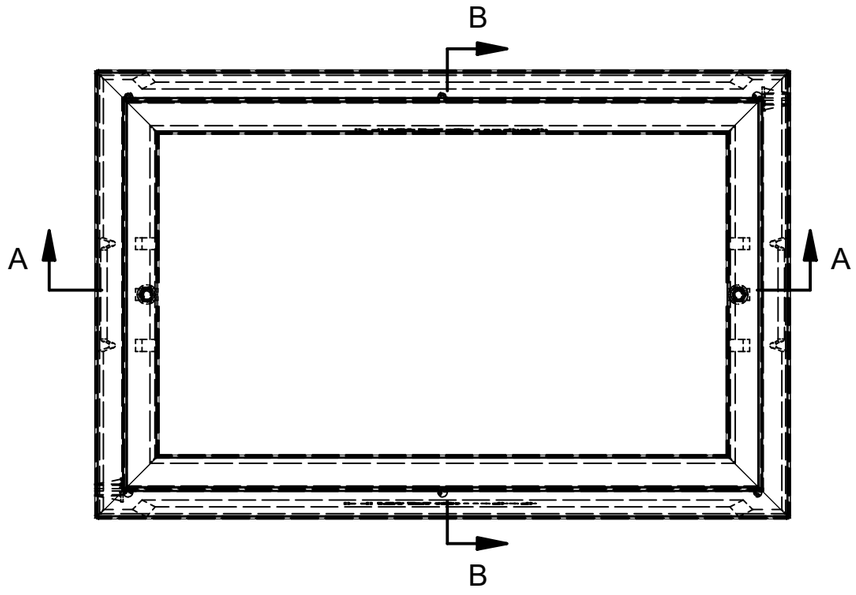

TOP VIEW

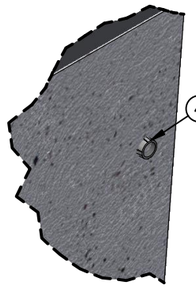

(2) 1/2"-13 UNC INSERT FOR LIFTING, OPPOSITE CORNERS

DETAIL K
LIFT INSERT

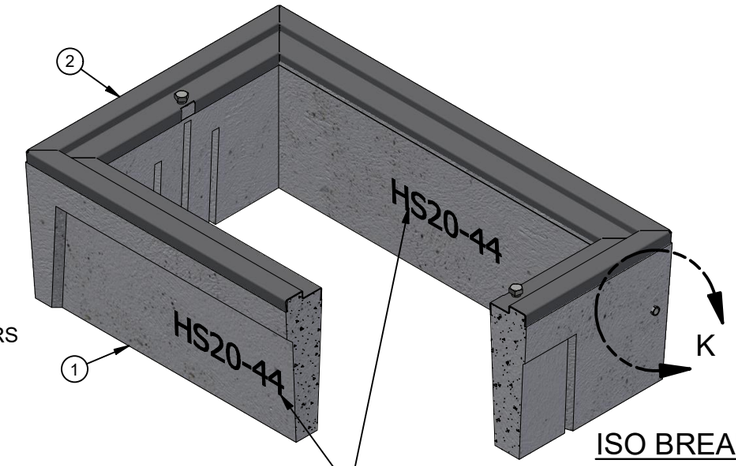

STENCILED LOAD RATING INSIDE & OUTSIDE OF BASE

ISO BREAKOUT VIEW

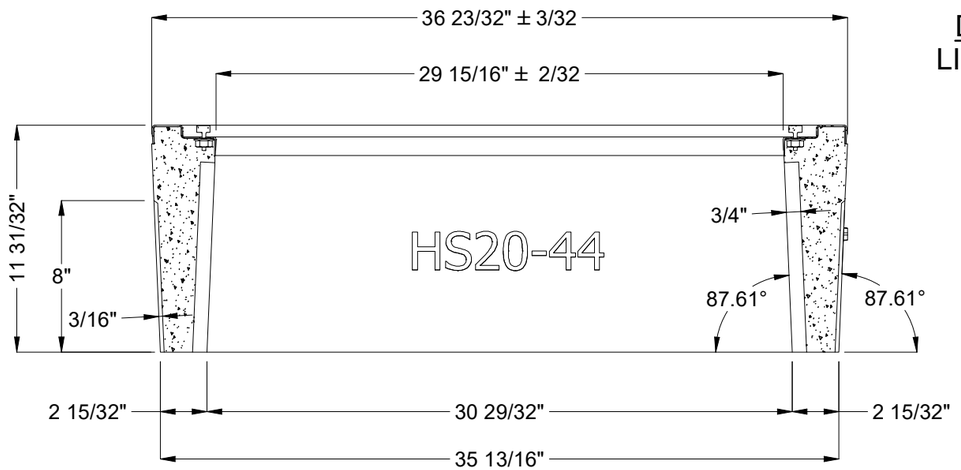

SECTION A-A

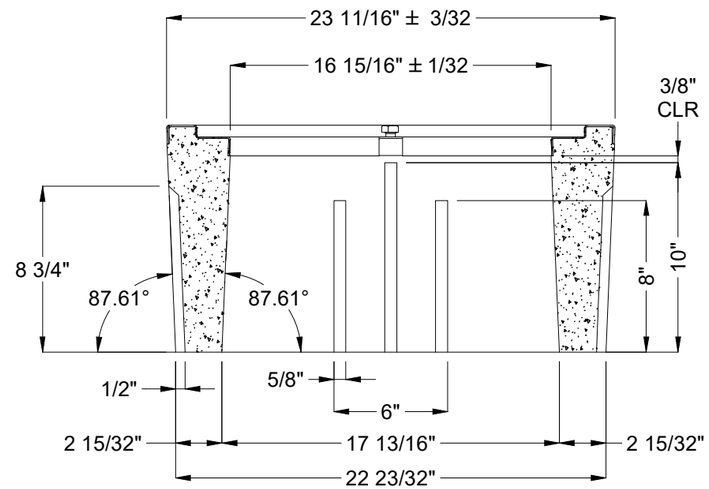

SECTION B-B

LIFTING NOTES
■ THIS CONCRETE PRODUCT IS DESIGNED TO BE LIFTED AT 5500 PSI WITH 2 LIFT CONNECTIONS EQUALLY LOADED TO 2 LIFTING POINTS AT A MINIMUM 60° SLING ANGLE, MEASURED FROM HORIZONTAL.
*All rigging shall be design by a qualified professional. Loading diagrams show illustrations of possible rigging setups to achieve the required sling angle and load leg equalization. Other valid rigging configurations are possible. A qualified professional must be consulted prior to lifting.

RIGGING DIAGRAM*	F

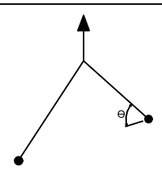

CHANGE HISTORY			
REV	DESCRIPTION	DATE	BY
A	INITIAL RELEASE 2009-20302-COR	5/18/2021	BGD
A-3	PROPERTIES & DESCRIPTION UPDATED	2/28/23	MB
B	KNOCKOUTS ADDED TO MODEL	08/30/23	MB

BURY DEPTH:	0.0' - 0.5' to Top		
WATER LEVEL:	Below Structure	APPROX. WEIGHT:	303.17 Lbs
DESIGN SPEC:	ASTM C857	LOADING SPEC:	A-16 (AASHTO HS20-44)
REINFORCEMENT TYPE:	None	LIFTING TYPE:	Insert

JENSEN PRECAST EST. 1968

WWW.JENSENPRECAST.COM

©2025 Jensen Precast- All rights reserved.
All materials appearing as Jensen Precast documents and the like are proprietary work product and are protected under U.S. copyright and other laws.
Unless in conjunction with business conducted with Jensen Precast, any use of Jensen Precast work product without express, written consent is prohibited, and recipient is prohibited from distributing any and all work product to non-approved third parties under penalty of civil action.

DESCRIPTION:	HT 1730x12 Concrete Box 1/2-13 SS Penta CASTING LAYOUT		REV: C-5
PART NUMBER:	100027294	DRAWN BY:	M. Baumann
CREATED:	10/7/2020	MODIFIED:	3/26/2025
			SHEET: 1 OF 1

100027294.idw