NOTES
■ DESIGN LOAD: TRAFFIC RATED WHEN INSTALLED PER CALTRANS ES-8B
■ FOR COMPLETE DESIGN AND PRODUCT INFORMATION CONTACT JENSEN PRECAST.

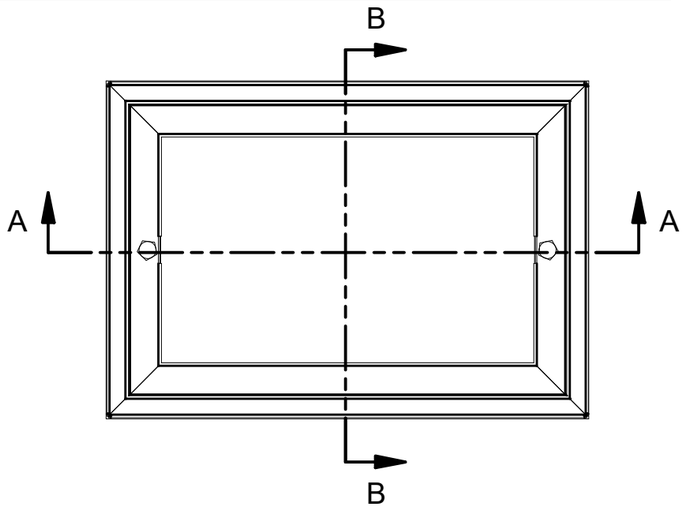

TOP VIEW

BILL OF MATERIALS

ITEM	UNIT QTY	QTY	PART NUMBER	DESCRIPTION
1	0.797 ft^3	0.797 ft^3	100011426	CONCRETE MIX GENERIC 5500 PSI
2	1	1	100002479	HTFAS-1017-CD-G
3	1	2	100004449	BOLT PENTA 1/2-13 UNC 0.875 HEAD 1L SS

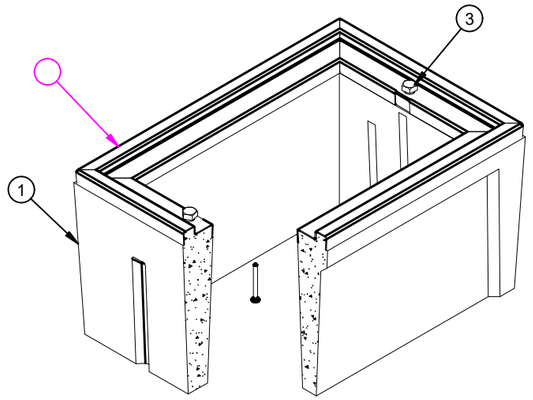

ISO BREAKOUT VIEW

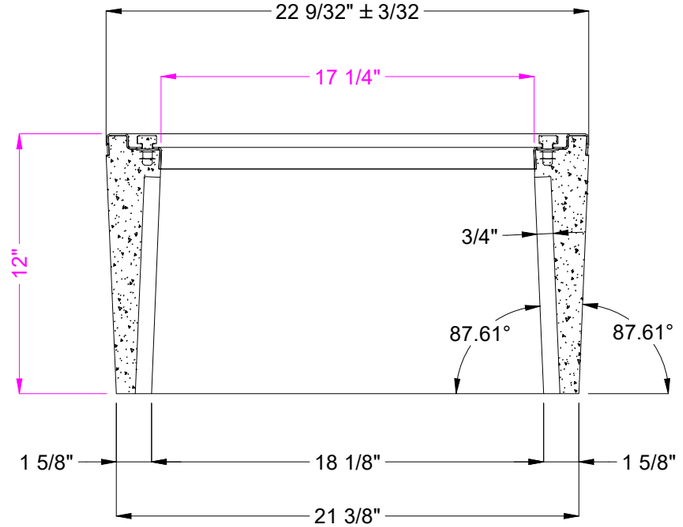

SECTION A-A

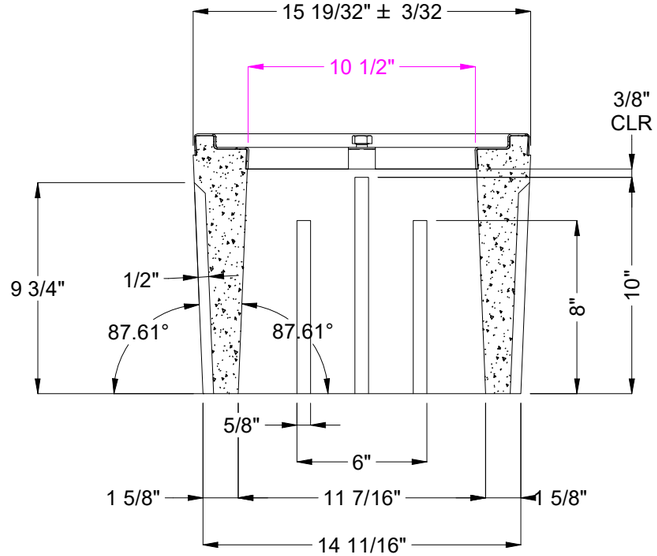

SECTION B-B

CHANGE HISTORY			
REV	DESCRIPTION	DATE	BY
A	INITIAL RELEASE 2009-20302-COR	5/18/2021	BGD
B	DESCRIPTION & DRAWING UPDATED, KNOCKOUTS ADDED	8/30/2023	MB

BURY DEPTH:	0.0' - 0.5' to Top		
WATER LEVEL:	Below Structure	APPROX. WEIGHT:	127.45 Lbs
DESIGN SPEC:	ASTM C857	LOADING SPEC:	A-16 (AASHTO HS20-44)
REINFORCEMENT TYPE:	None	LIFTING TYPE:	None

JENSEN PRECAST EST. 1968

WWW.JENSENPRECAST.COM

©2023 Jensen Precast- All rights reserved.
All materials appearing as Jensen Precast documents and the like are proprietary work product and are protected under U.S. copyright and other laws.
Unless in conjunction with business conducted with Jensen Precast, any use of Jensen Precast work product without express, written consent is prohibited, and recipient is prohibited from distributing any and all work product to non-approved third parties under penalty of civil action.

DESCRIPTION:	HT 1017x12 Concrete Box 1/2-13 SS Penta CASTING LAYOUT		REV: B-4
PART NUMBER:	100027292	DRAWN BY:	M. Baumann
CREATED:	9/16/2020	MODIFIED:	9/5/2023
			SHEET: 1 OF 1

100027292.idw