NOTES
■ FOR COMPLETE DESIGN AND PRODUCT INFORMATION CONTACT JENSEN PRECAST.

BILL OF MATERIALS

ITEM	QTY	PART NUMBER	DESCRIPTION
1	6.243 ft^3	100011425	CONCRETE MIX GENERIC 5000 PSI
2	1	200041798	REINFORCING MAT 200041798
3	10	100002766	INSERT FERRULE LOOP 5/8 X 3-1/2 PLATED FX-5

100026738.idw

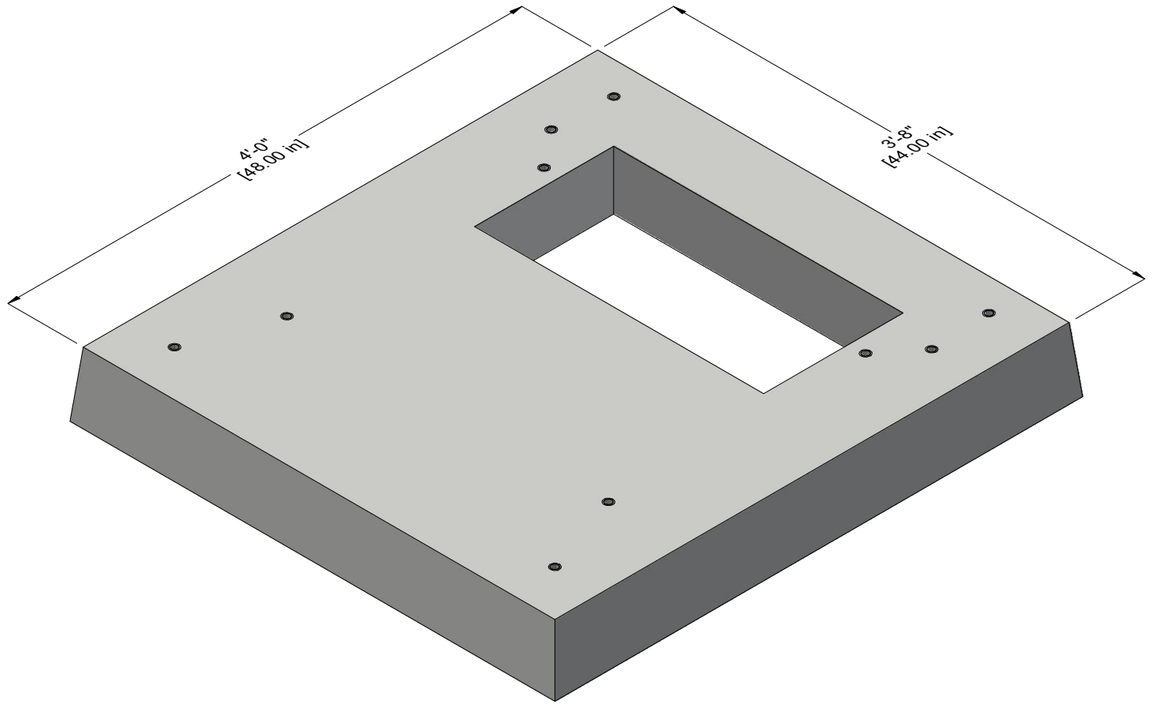

ISO REF

LIFTING NOTES
■ THIS CONCRETE PRODUCT IS DESIGNED TO BE LIFTED AT 2000 PSI WITH 4 LIFT CONNECTIONS EQUALLY LOADED TO 2 LIFTING POINTS AT A MINIMUM 60° SLING ANGLE, MEASURED FROM HORIZONTAL.
*All rigging shall be design by a qualified professional. Loading diagrams show illustrations of possible rigging setups to achieve the required sling angle and load leg equalization. Other valid rigging configurations are possible. A qualified professional must be consulted prior to lifting.

RIGGING DIAGRAM*	B

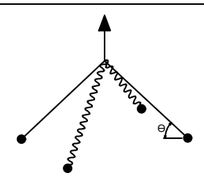

BURY DEPTH:	0.0' - 0.0' to Top		
WATER LEVEL:	Below Structure	APPROX. WEIGHT:	940.88 Lbs
DESIGN SPEC:	ACI 318,ASTM C857	LOADING SPEC:	A-03 (300 psf)
REINFORCEMENT TYPE:	Rebar	LIFTING TYPE:	Insert

JENSEN PRECAST EST. 1968

WWW.JENSENPRECAST.COM

©2024 Jensen Precast- All rights reserved.
All materials appearing as Jensen Precast documents and the like are proprietary work product and are protected under U.S. copyright and other laws.
Unless in conjunction with business conducted with Jensen Precast, any use of Jensen Precast work product without express, written consent is prohibited, and recipient is prohibited from distributing any and all work product to non-approved third parties under penalty of civil action.

REVISION HISTORY			
REV	DESCRIPTION	DATE	BY
A	INITIAL RELEASE	-	-
B	UPDATED DRAWINGS	07/15/2020	DCH
C	REVISED INSERT QUANTITY AND REINFORCING	06/21/2024	RM

DESCRIPTION: Pad 4448x6 13"x27"E LMUD 1U 25/167 CASTING LAYOUT				REV: C-1
PART NUMBER:	100026738	DRAWN BY:	D. Hughes	SHEET: 1 OF 2
CREATED:	7/15/2020	MODIFIED:	6/21/2024	

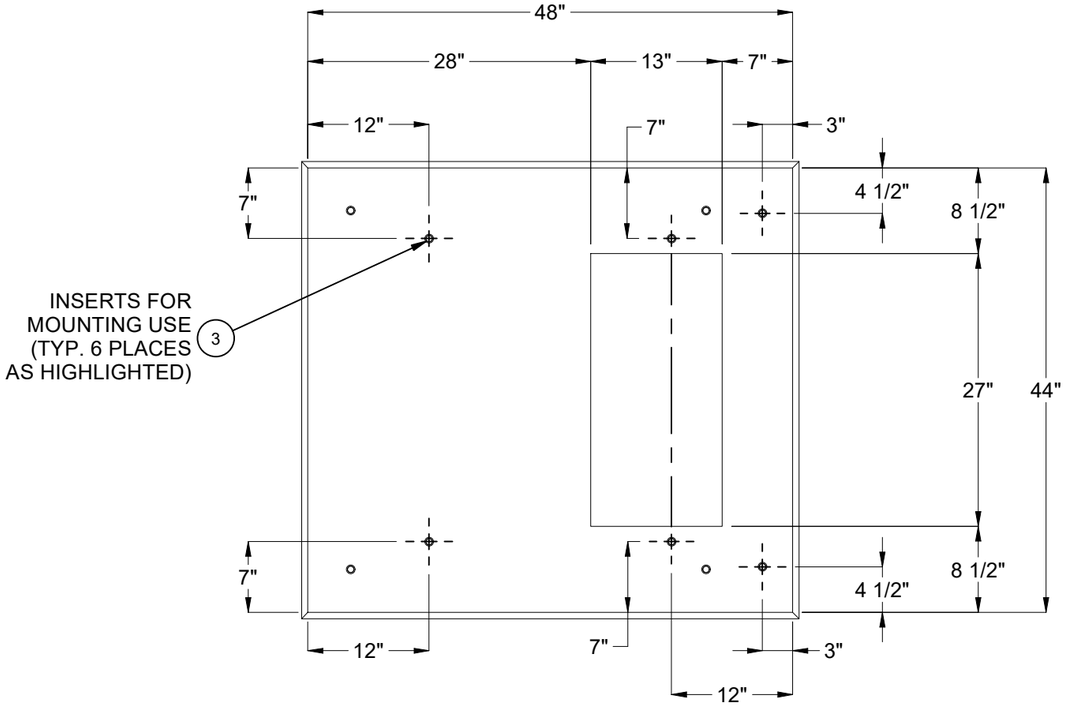

PLAN VIEW

SIX INSERTS HIGHLIGHTED
ARE FOR MOUNTING USE ONLY,
(NOT FOR LIFTING USE)

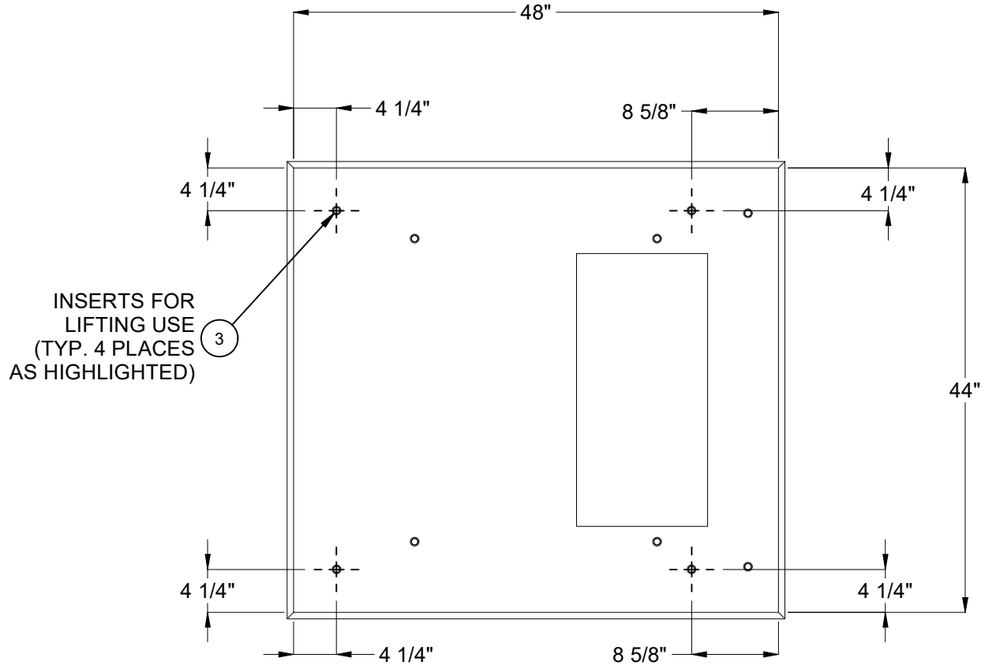

PLAN VIEW

FOUR INSERTS HIGHLIGHTED
ARE FOR LIFTING USE

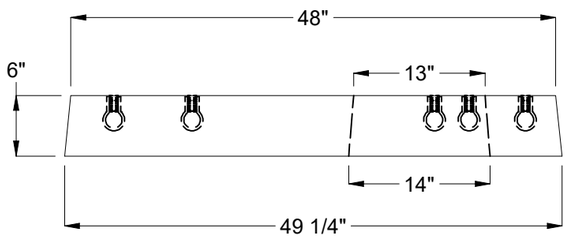

SIDE ELEVATION

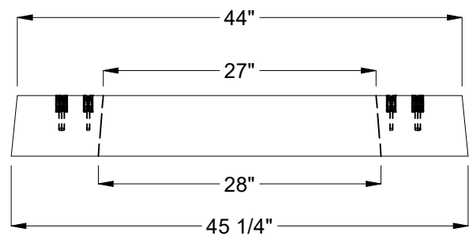

END ELEVATION

BURY DEPTH:	0.0' - 0.0' to Top		
WATER LEVEL:	Below Structure	APPROX. WEIGHT:	940.88 Lbs
DESIGN SPEC:	ACI 318,ASTM C857	LOADING SPEC:	A-03 (300 psf)
REINFORCEMENT TYPE:	Rebar	LIFTING TYPE:	Insert

JENSEN PRECAST EST. 1968

WWW.JENSENPRECAST.COM

©2024 Jensen Precast- All rights reserved.
All materials appearing as Jensen Precast documents and the like are proprietary work product and are protected under U.S. copyright and other laws.
Unless in conjunction with business conducted with Jensen Precast, any use of Jensen Precast work product without express, written consent is prohibited, and recipient is prohibited from distributing any and all work product to non-approved third parties under penalty of civil action.

DESCRIPTION:	Pad 4448x6 13"x27"E LMUD 1U 25/167 CASTING DRAWING		
PART NUMBER:	100026738	DRAWN BY:	D. Hughes
CREATED:	7/15/2020	MODIFIED:	6/21/2024

REV: C-1

SHEET: 2 OF 2

100026738.idw