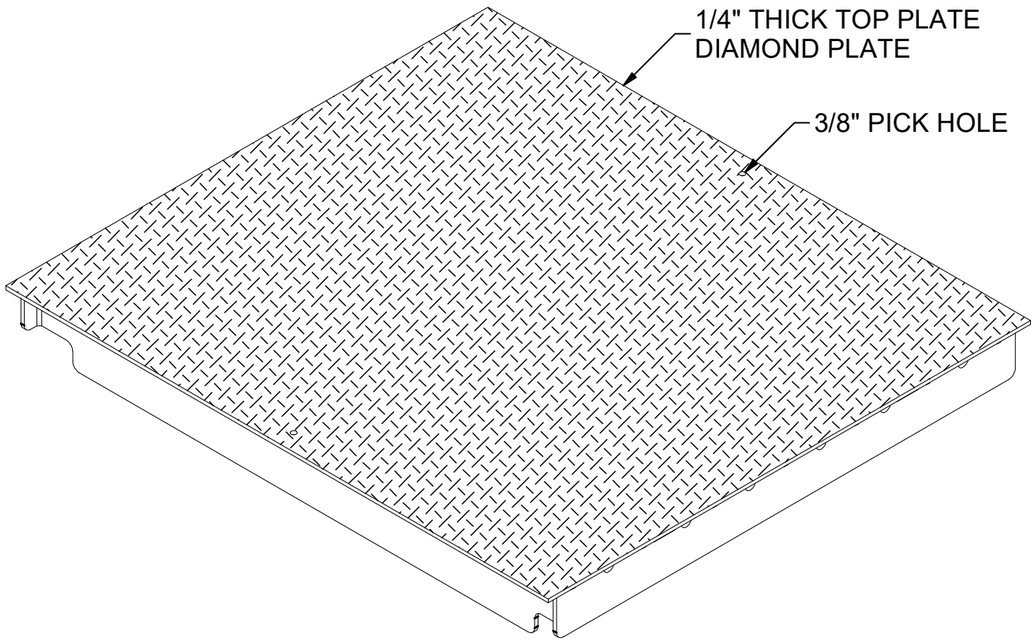

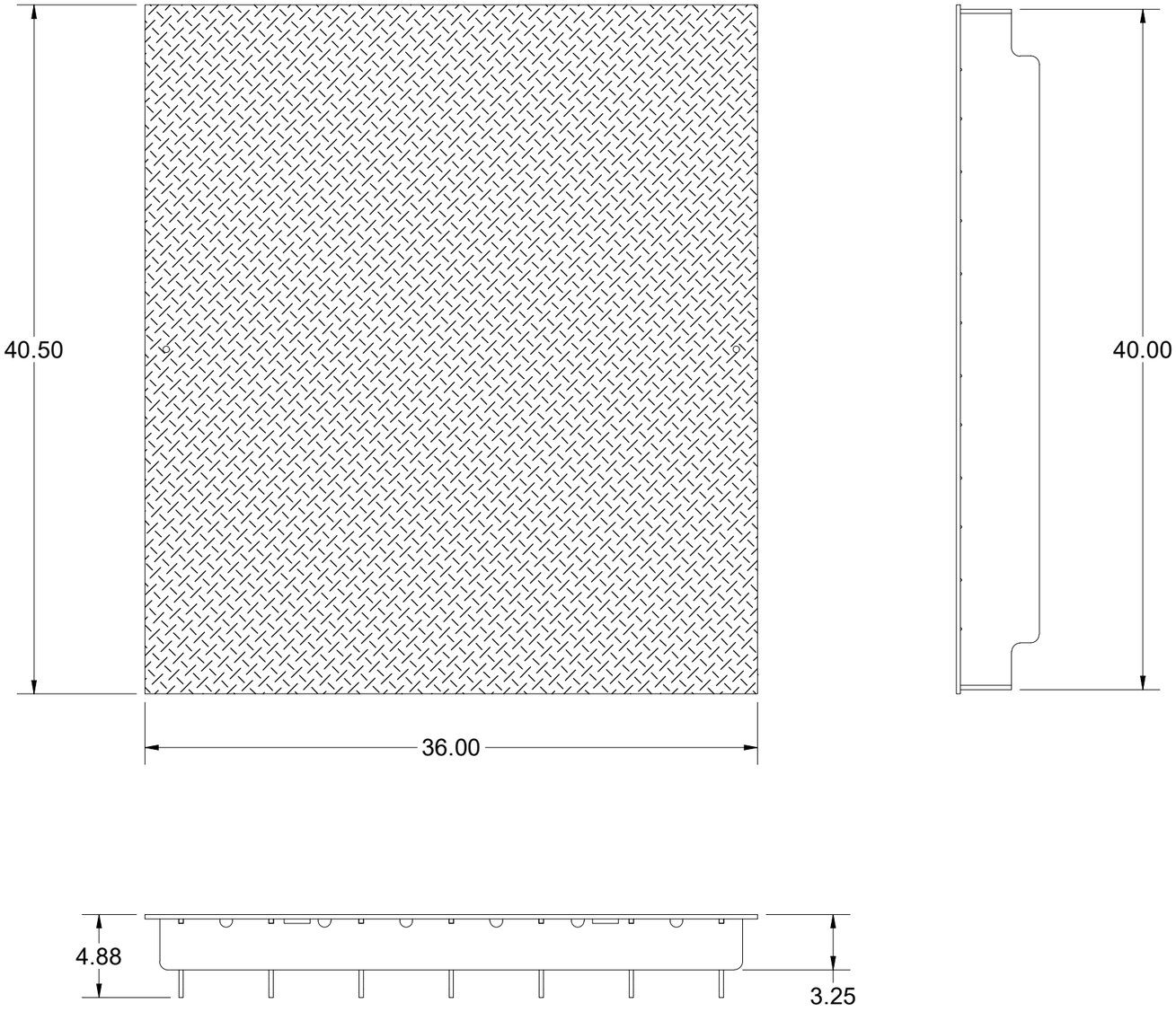

100025942.idw

LOADING CRITERIA: ASTM C1802 Load Level 05

16,000 lb load on 10" x 20" footprint, with 30% impact restricted to unrestricted parking lanes and alleyways where traffic speed is limited to 15 miles per hour.

SURFACE:	Diamond Plate	FINISH:	Painted
WEIGHT:	215.85 lbs	MARKING:	None

JENSEN METALTECH
450 E. GLENDALE AVE. SPARKS. NV 89431
775-352-2716 FAX: 755-358-8127
JENSENMETALTECH.COM

©2024 Jensen Precast- All rights reserved. All materials appearing as Jensen Precast documents and the like are proprietary work product and are protected under U.S. copyright and other laws.
Unless in conjunction with business conducted with Jensen Precast, any use of Jensen Precast work product without express, written consent is prohibited, and recipient is prohibited from distributing any and all work product to non-approved third parties under penalty of civil action.

DESCRIPTION: DAS1-SD-3636-D5-DP-P-BLACK-BRKS

36x36 Standard Door Assembly (Loading Criteria Per ASTM C1802 Load Level 05, Single Door, Steel, Drop In, Pickhole, Diamond Plate, Painted BLACK BRKS)

PART NUMBER:	100025942	DRAWN BY:	M. Newman
CREATED:	8/13/2024	MODIFIED:	10/18/2024

REV: A-1-1

SHEET: 1

BILL OF MATERIALS

ITEM	ITEM QTY	QTY	PART NUMBER	DESCRIPTION	PART NAME
1	1	113.810 lbmass	100007736	Door Component Steel Plate, Top	200092139
2	2	14.119 lbmass	100007735	Door Component Steel Side Bar	200092140
3	7	86.783 lbmass	100007735	Door Component Steel Stiffener, Plate	200092141

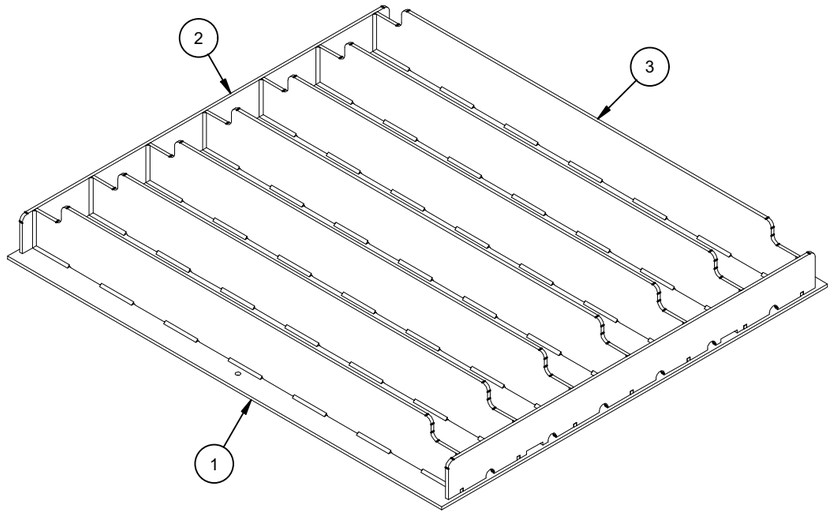

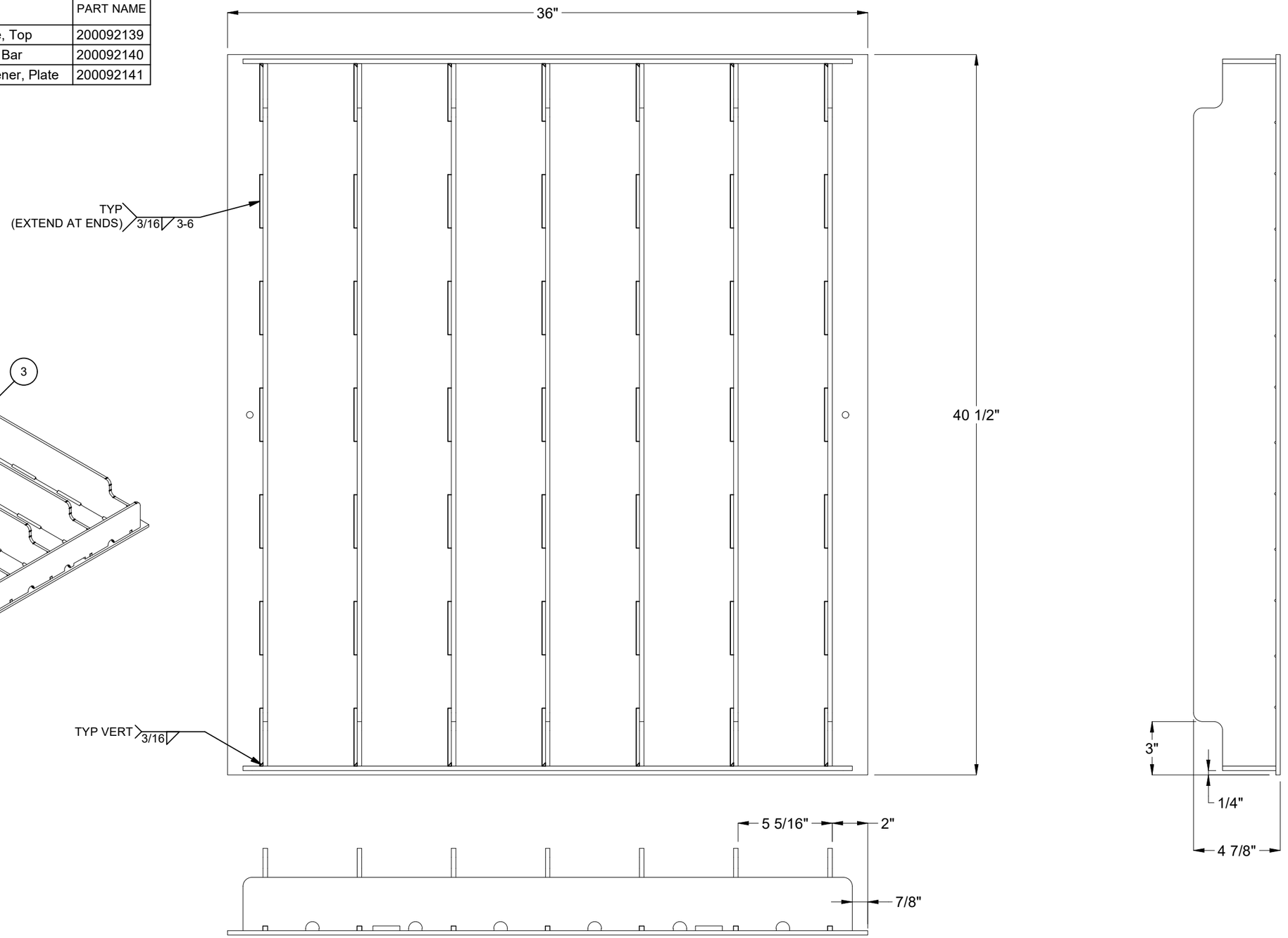

100025942.idw

REVISION HISTORY	
DESCRIPTION	DATE
THIS WAS SAVED AS THE WRONG PART NUMBER. COPIED THE DESIGN TO 100025943 AND CHANGED THIS DESIGN TO THE NON-BOLTDOWN DESIGN.	10/18/2024

MATERIAL FINISH: Painted

MATERIAL SURFACE: Diamond Plate

JENSEN METALTECH

450 E. GLENDALE AVE. SPARKS. NV 89431
775-352-2716 FAX: 755-358-8127
JENSENMETALTECH.COM

©2024 Jensen Precast- All rights reserved. All materials appearing as Jensen Precast documents and the like are proprietary work product and are protected under U.S. copyright and other laws. Unless in conjunction with business conducted with Jensen Precast, any use of Jensen Precast work product without express, written consent is prohibited, and recipient is prohibited from distributing any and all work product to non-approved third parties under penalty of civil action.

PART NUMBER & DESCRIPTION: 100025942 — DAS1-SD-3636-D5-DP-P-BLACK-BRKS

REV: A-1-1

WEIGHT: 215.85 Lbs

DRAWN BY: M. Newman

CREATED: 8/13/2024

MODIFIED: 10/18/2024

SHEET: 2

BURN LIST - BOM

PART NAME	ITEM QTY	QTY	DESCRIPTION	STOCK NUMBER	MATERIAL	MASS	SHEET
200092139	1	113.810 lbmass	Door Component Steel Plate, Top	100007736	SHT STL CQ DP RAW .25	113.998 lbmass	04
200092140	2	14.119 lbmass	Door Component Steel Side Bar	100007735	STL ASTM A36 SM-HRPO RAW .250	7.059 lbmass	05
200092141	7	86.783 lbmass	Door Component Steel Stiffener, Plate	100007735	STL ASTM A36 SM-HRPO RAW .250	12.398 lbmass	06

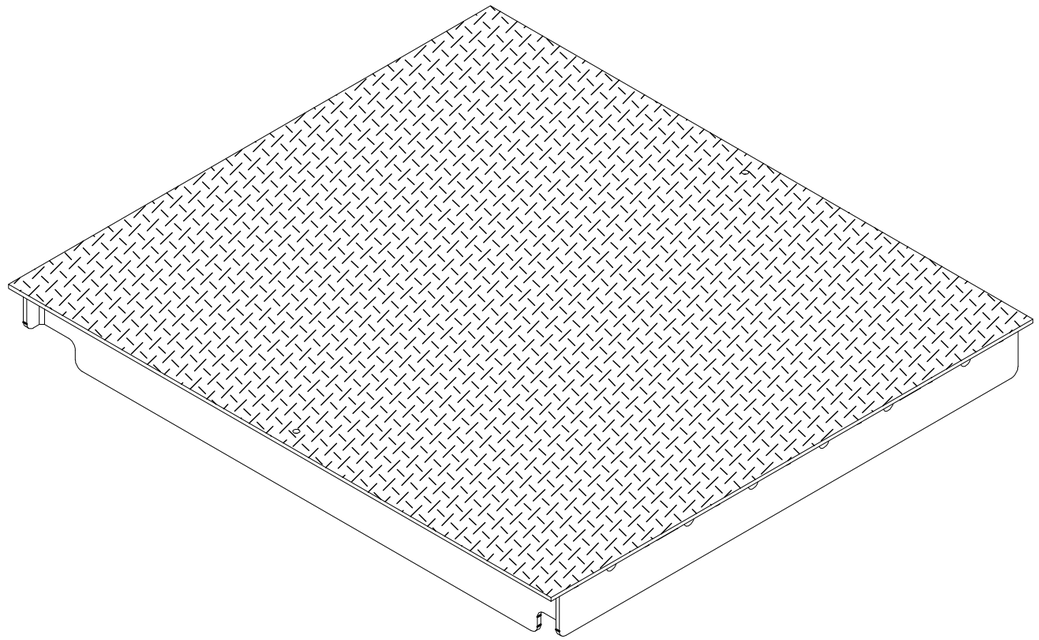

100025942.idw

MATERIAL FINISH: Painted

MATERIAL SURFACE: Diamond Plate

JENSEN METALTECH
450 E. GLENDALE AVE. SPARKS. NV 89431
775-352-2716 FAX: 755-358-8127
JENSENMETALTECH.COM

©2024 Jensen Precast- All rights reserved.
All materials appearing as Jensen Precast documents and the like are proprietary work product and are protected under U.S. copyright and other laws.
Unless in conjunction with business conducted with Jensen Precast, any use of Jensen Precast work product without express, written consent is prohibited, and recipient is prohibited from distributing any and all work product to non-approved third parties under penalty of civil action.

PART NUMBER & DESCRIPTION: 100025942 DAS1-SD-3636-D5-DP-P-BLACK-BRKS

REV: A-1-1

WEIGHT: 215.85 Lbs

DRAWN BY: M. Newman

CREATED: 8/13/2024

MODIFIED: 10/18/2024

SHEET: 3

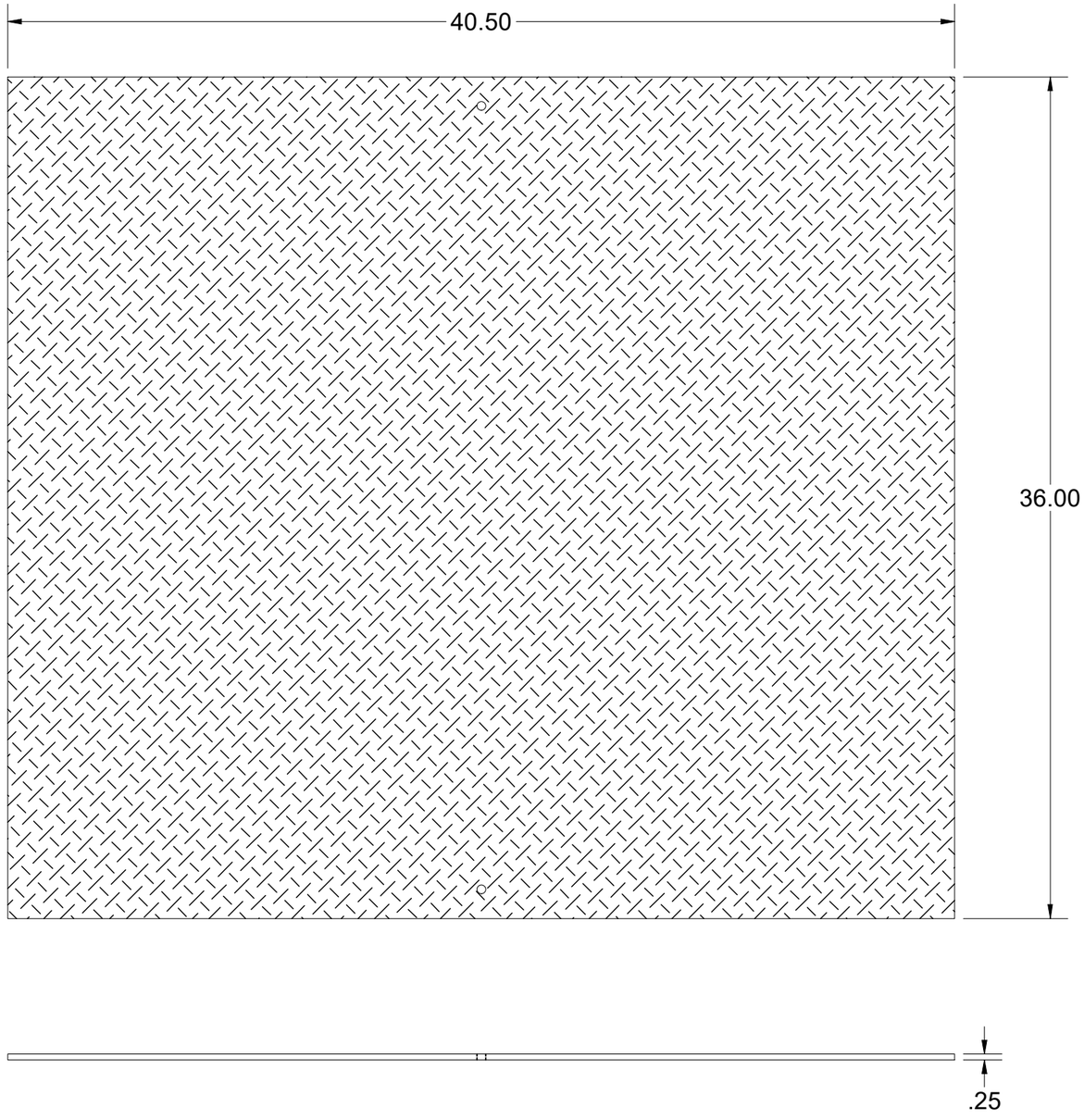

100025942.idw

BEND TABLE				MATERIAL IFS: 100007736
BEND RADIUS	V-OPENING	BEND ANGLE	BEND DEDUCTION	MATERIAL THK: 0.25
-	-	-	-	MAT DESCRIPTION: SHT STL CQ DP RAW .25 - 36 KSI YIELD

JENSEN METALTECH
450 E. GLENDALE AVE. SPARKS. NV 89431
775-352-2716 FAX: 755-358-8127
JENSENMETALTECH.COM

©2024 Jensen Precast- All rights reserved.
All materials appearing as Jensen Precast documents and the like are proprietary work product and are protected under U.S. copyright and other laws.
Unless in conjunction with business conducted with Jensen Precast, any use of Jensen Precast work product without express, written consent is prohibited, and recipient is prohibited from distributing any and all work product to non-approved third parties under penalty of civil action.

NAME & DESCRIPTION: 200092139 Door Component Steel Plate, Top		REV: A-1-1
WEIGHT: 113.998 lbmass	DRAWN BY: M. Newman	SHEET: 4 OF 6
CREATED: 8/13/2024	MODIFIED: 10/18/2024	

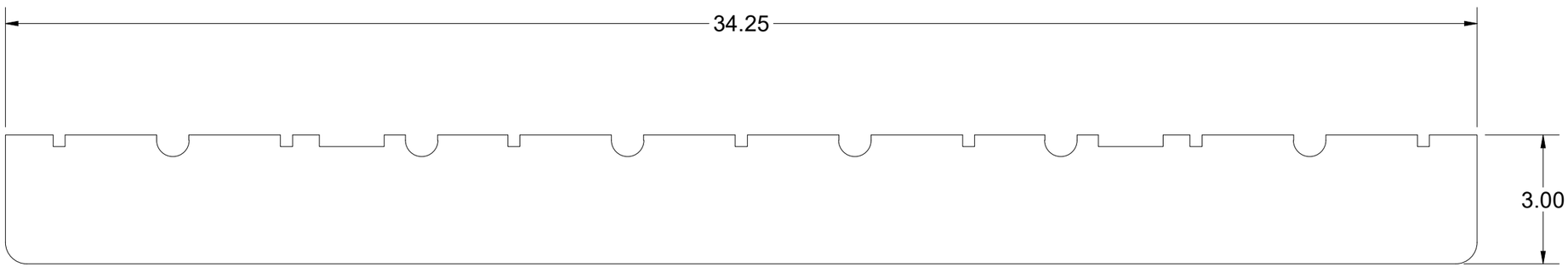

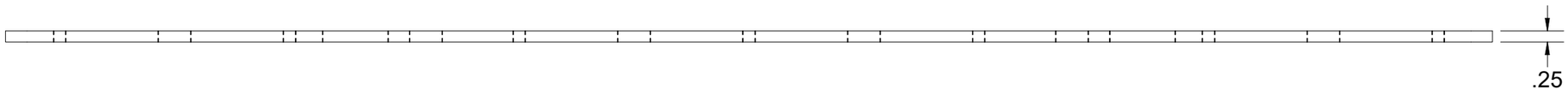

BEND TABLE				MATERIAL IFS: 100007735
BEND RADIUS	V-OPENING	BEND ANGLE	BEND DEDUCTION	MATERIAL THK: 0.25
-	-	-	-	MAT DESCRIPTION: STL ASTM A36 SM-HRPO RAW .250

JENSEN METALTECH
450 E. GLENDALE AVE. SPARKS. NV 89431
775-352-2716 FAX: 755-358-8127
JENSENMETALTECH.COM

©2024 Jensen Precast- All rights reserved.
All materials appearing as Jensen Precast documents and the like are proprietary work product and are protected under U.S. copyright and other laws.
Unless in conjunction with business conducted with Jensen Precast, any use of Jensen Precast work product without express, written consent is prohibited, and recipient is prohibited from distributing any and all work product to non-approved third parties under penalty of civil action.

NAME & DESCRIPTION: 200092140 Door Component Steel Side Bar		REV: A-1-1
WEIGHT: 7.059 lbmass	DRAWN BY: M. Newman	SHEET: 5 OF 6
CREATED: 8/13/2024	MODIFIED: 10/18/2024	

100025942.idw

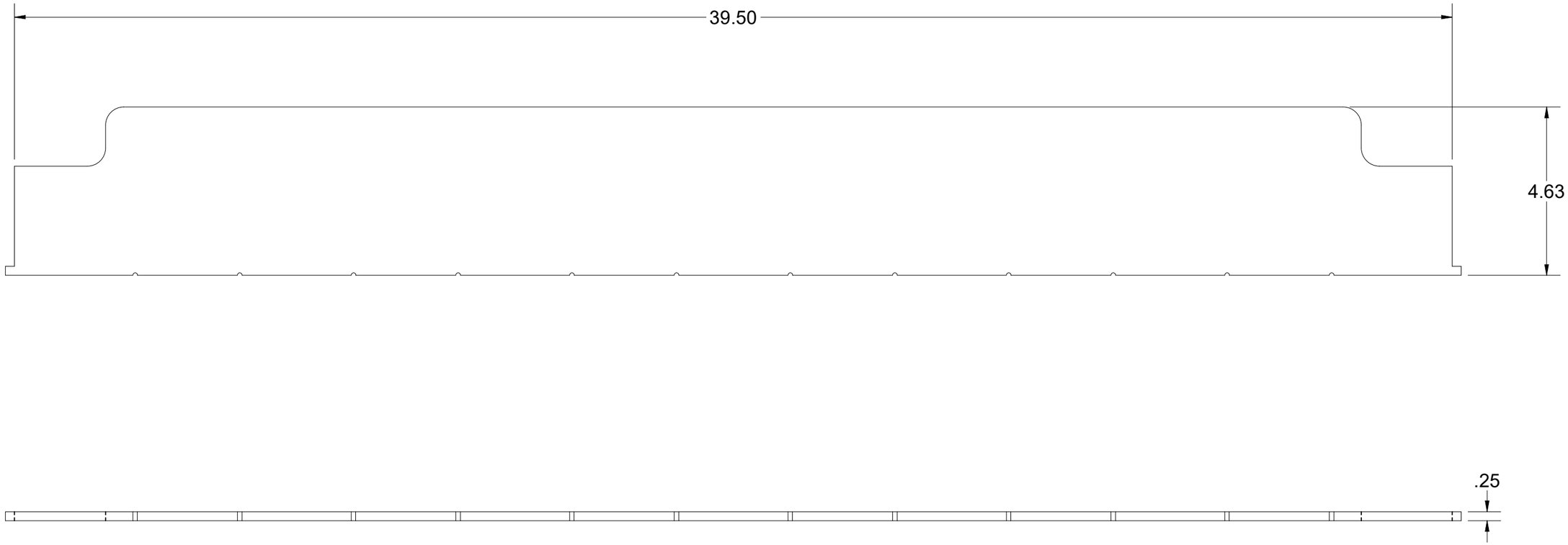

100025942.idw

BEND TABLE				MATERIAL IFS: 100007735
BEND RADIUS	V-OPENING	BEND ANGLE	BEND DEDUCTION	MATERIAL THK: 0.25
-	-	-	-	MAT DESCRIPTION: STL ASTM A36 SM-HRPO RAW .250

JENSEN METALTECH
450 E. GLENDALE AVE. SPARKS. NV 89431
775-352-2716 FAX: 755-358-8127
JENSENMETALTECH.COM

©2024 Jensen Precast- All rights reserved.
All materials appearing as Jensen Precast documents and the like are proprietary work product and are protected under U.S. copyright and other laws.
Unless in conjunction with business conducted with Jensen Precast, any use of Jensen Precast work product without express, written consent is prohibited, and recipient is prohibited from distributing any and all work product to non-approved third parties under penalty of civil action.

NAME & DESCRIPTION:	200092141	REV:
Door Component Steel Stiffener, Plate		A-1-1
WEIGHT: 12.398 lbmass	DRAWN BY: M. Newman	SHEET: 6 OF 6
CREATED: 8/13/2024	MODIFIED: 10/18/2024	