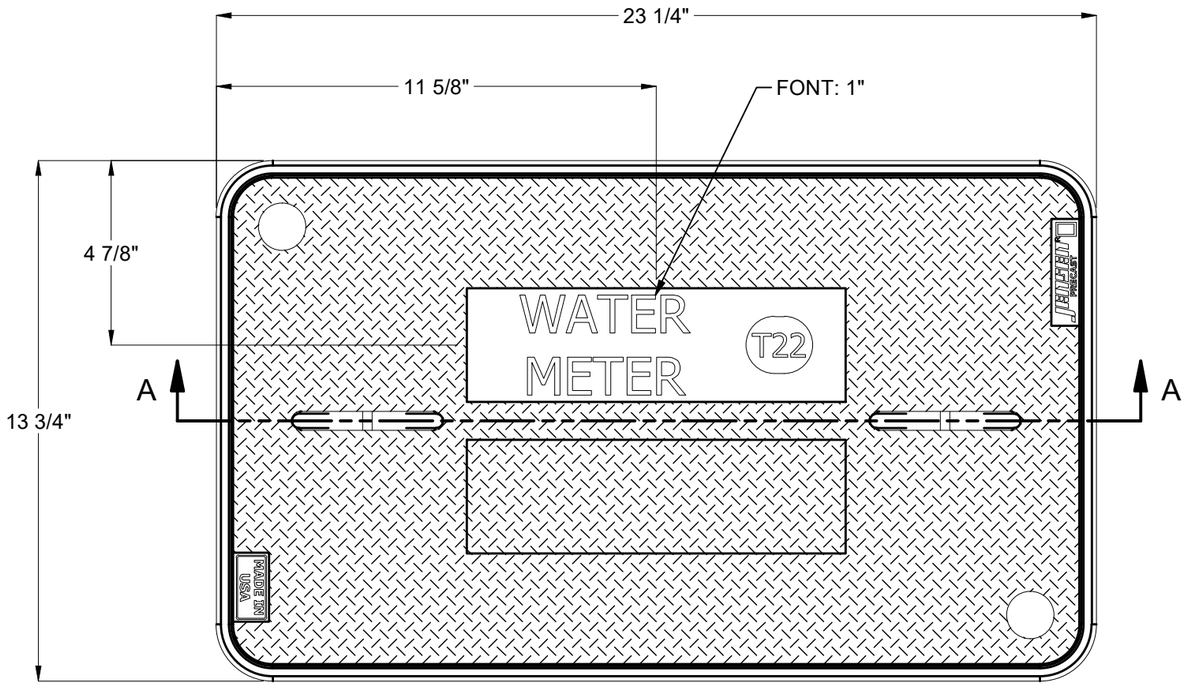

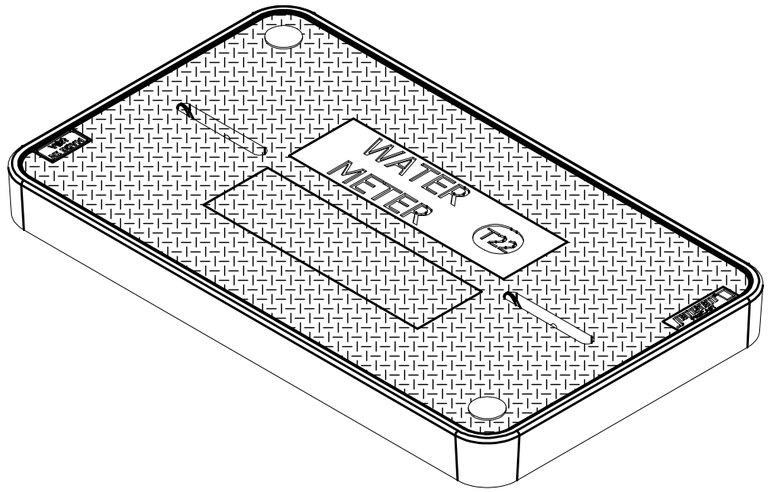

BILL OF MATERIALS

ITEM	UNIT QTY	QTY	PART NUMBER	DESCRIPTION
1	0.350 ft^3	0.350 ft^3	100035039	CONCRETE COMPOSITE LID MIX BRUCE
2	0.333 ft	0.667 ft	100008155	REINF ROD SMOOTH PENCIL #2 1/4 SS
3	0.510 lbmass	1.020 lbmass	100008157	Combo Mat Fiber Reinforcing 24 Oz

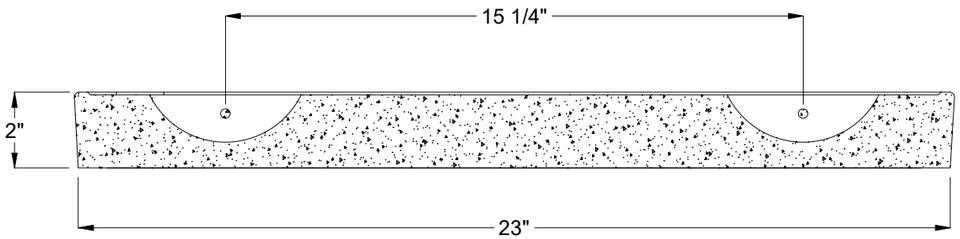

SECTION A-A

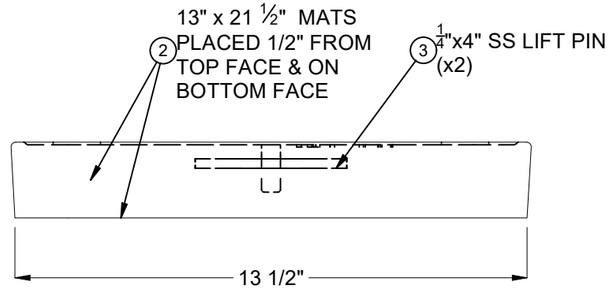

REVISION HISTORY			
REV	DESCRIPTION	DATE	BY
A	DRAWING CREATED	5/6/2022	

DESIGN SPEC: ANSI/SCTE-77	APPROX. WEIGHT: 42.8 lbs		
AGENCY:	DESIGN/TEST LOAD: 22.5/33.75 kip	JENSEN PRECAST EST. 1968	
AGENCY SPEC:	LOADING SPEC: Tier-22		

©2022 Jensen Precast- All rights reserved.
Unless expressly authorized by Jensen Precast any use or duplication is strictly prohibited under penalty of civil action or codes.

DESCRIPTION: HPC 1324 Polymer Cover, Tier-22, Non-Bolt Down, WATER METER			REV: B-3
PART #: 100023215	DRAWN BY: D. Morgan		SHEET: 1 OF 1
CREATED: 2/19/2019	MODIFIED: 9/23/2022		

100023215.idw