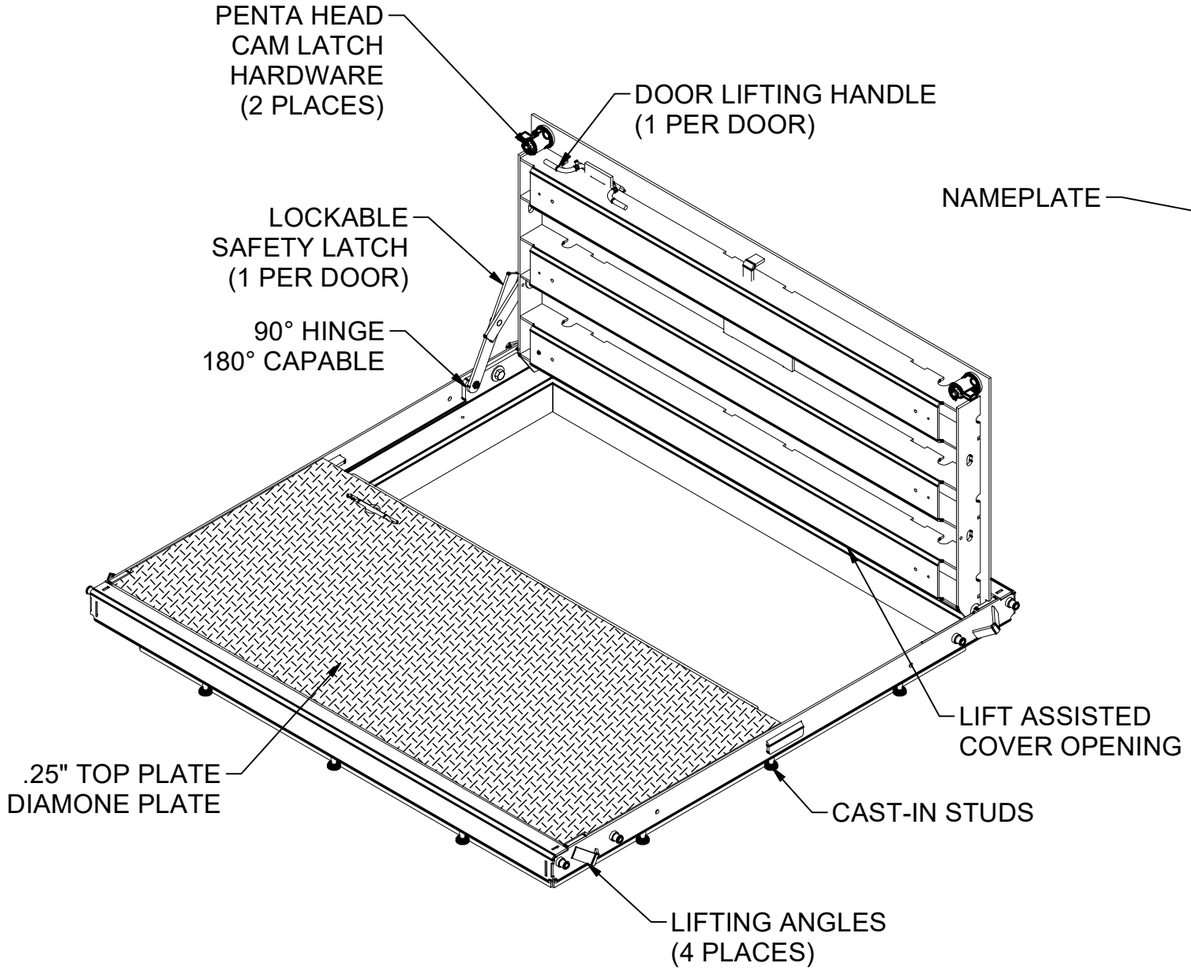

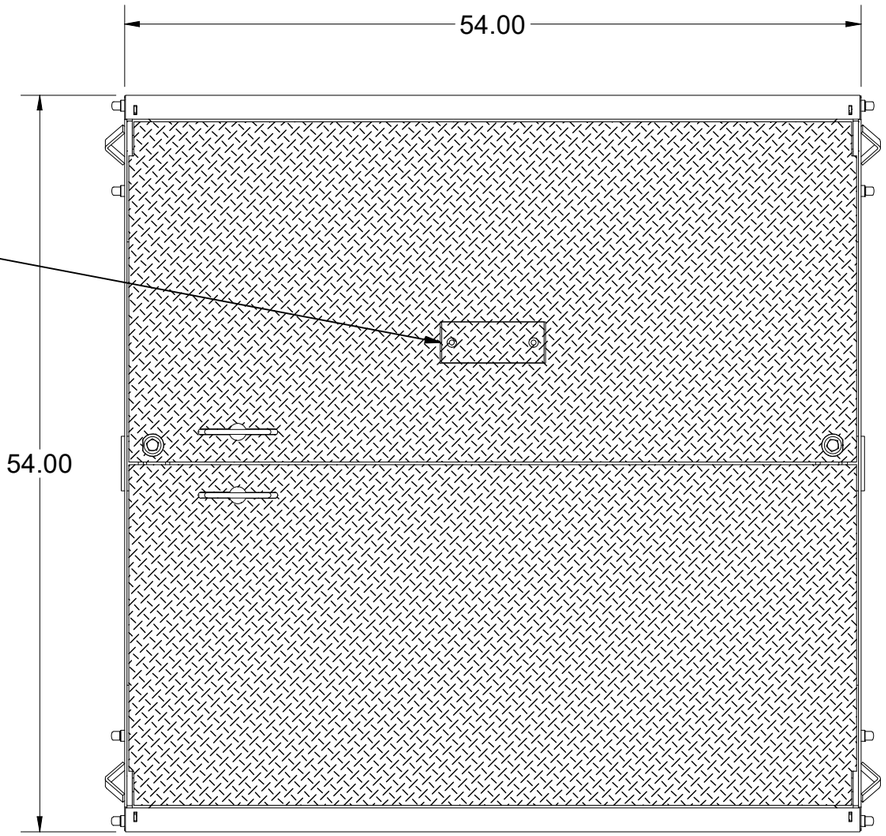

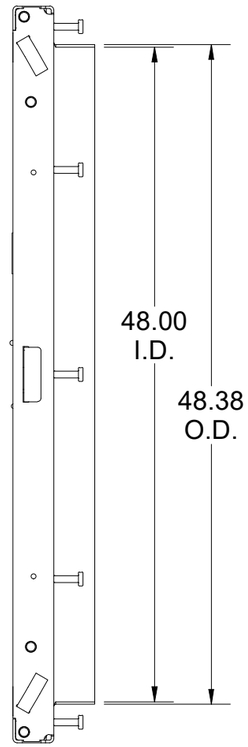

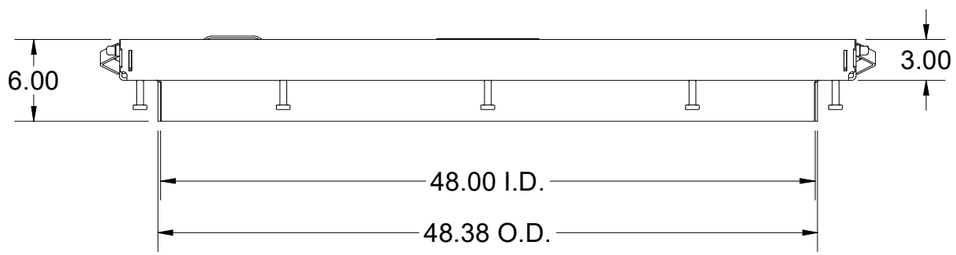

100023070.idw

ASTM C1802: Level 04

16,000 lb load on 10" x 20" footprint, without impact restricted to parking spaces and areas within close proximity of roadways.

SURFACE:	Diamond Plate	FINISH:	Galvanized
WEIGHT:	508.52 lbs	MARKING:	As Noted

JENSEN METALTECH
450 E. GLENDALE AVE. SPARKS. NV 89431
775-352-2716 FAX: 755-358-8127
JENSENMETALTECH.COM

©2022 Jensen Precast- All rights reserved. All materials appearing as Jensen Precast documents and the like are proprietary work product and are protected under U.S. copyright and other laws. Unless in conjunction with business conducted with Jensen Precast, any use of Jensen Precast work product without express, written consent is prohibited, and recipient is prohibited from distributing any and all work product to non-approved third parties under penalty of civil action.

DESCRIPTION: CAS2-4848-CH4-DP-G-FONT-OH06

48x48 Cover Assembly (ASTM Load Level 04, 2 Door, Steel, Hinged, Diamond Plate, Galvanized , N/A , N/A) OH 06

REV: A-4

SHEET: 1

PART NUMBER:	100023070	DRAWN BY:	CNATION
CREATED:	5/1/2018	MODIFIED:	7/21/2022

BILL OF MATERIALS

ITEM	UNIT QTY	QTY	PART NUMBER	DESCRIPTION
1	1	1	200054257	DAS2-B-4848-H4-DP-R-Robot Door
2	1	1	200054259	DAS2-T-4848-H4-DP-R-Robot Door
3	1	1	200054262	FAS-4848-CH4-R-OH06
4	1	4	100003823	BOLT HEX 1/2-13 UNC 1.5 ZINC
5	1	4	100007869	BOLT HEX SOCKET HEAD CAP SCREW 1/2-13 UNC 1-3/4 316SS
6	1	4	100007873	BOLT HEX SOCKET HEAD CAP SCREW 3/8-16 UNC 1-1/4 PLATED
7	1	8	100007939	CAP VINYL .467 X 1/2
8	1	2	100007918	COTTER PIN 0.094DIA X 1-1/4
9	1	2	100007492	HEX NUT NYLOCK 1/2-13 GR-5 ZINC-PLATED
10	1	2	100007729	HEX NUT SLOTTED CASTLE HEAD 1/2-13 SS
11	1	2	100007659	HINGE ASSY STL LEFT .50
12	1	2	100007666	HINGE ASSY STL RIGHT
13	1	2	100007924	LANYARD 3/64 W/PIN COATED SS
14	1	2	100007857	NUT FINGER 1/2-13 BRASS
15	1	2	100007882	RIVET GRIP STEEL 3/16 X 7/16 LRG HD
16	1	4	100007859	RIVET NUT 3/8-16 FLAT KNURLED
17	1	2	100007933	SAFETY LATCH ASSY FOR UNI AND 90 D HINGE
18	1	2	100007915	SPRING COMPRESSION 055 X 5/8 X 7/8 LONG
19	1	2	100007671	SPRING MOUNT ASSY .50
20	1	2	100007727	TORSION HEX ROD .5 x 36in RAW
21	1	8	100011418	WASHER FLAT 1/2 X 1 3/8 USS TYPE A ZINC
22	1	1	100006739	FONTANA NAME PLATE SS BLANK
23	1	1	100007678	FONTANA NAME PLATE SHIM SST
24	1	2	100007748	BOLT PENTA 1/2-13 UNC 0.875 HEAD 2.5L ZINC DRILLED
25	1	2	100007876	BOLT SHOULDER 3/8 X 1/2 WITH 3/8-16 UNC THREADS GR 5 PLATED

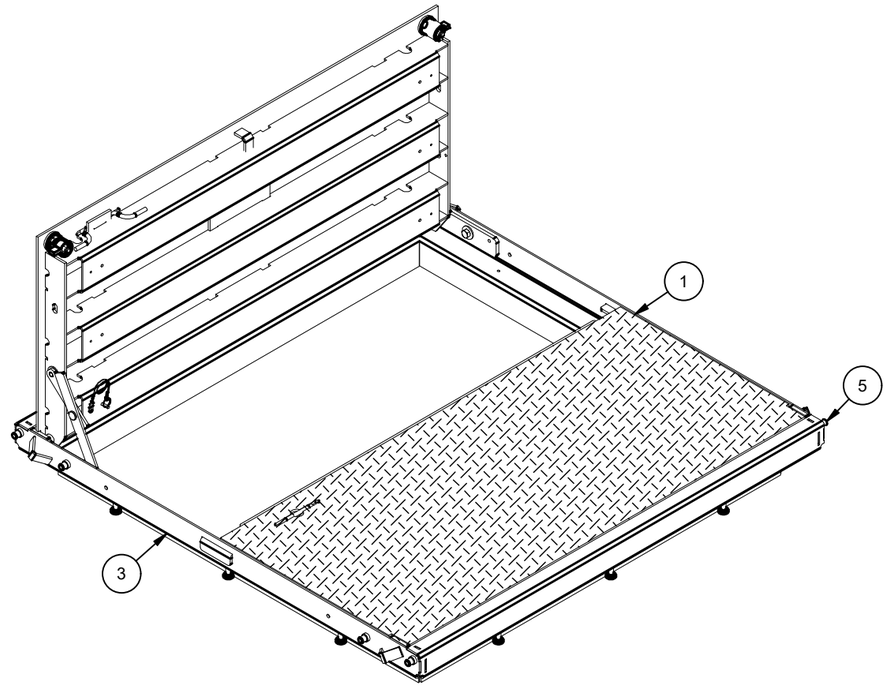

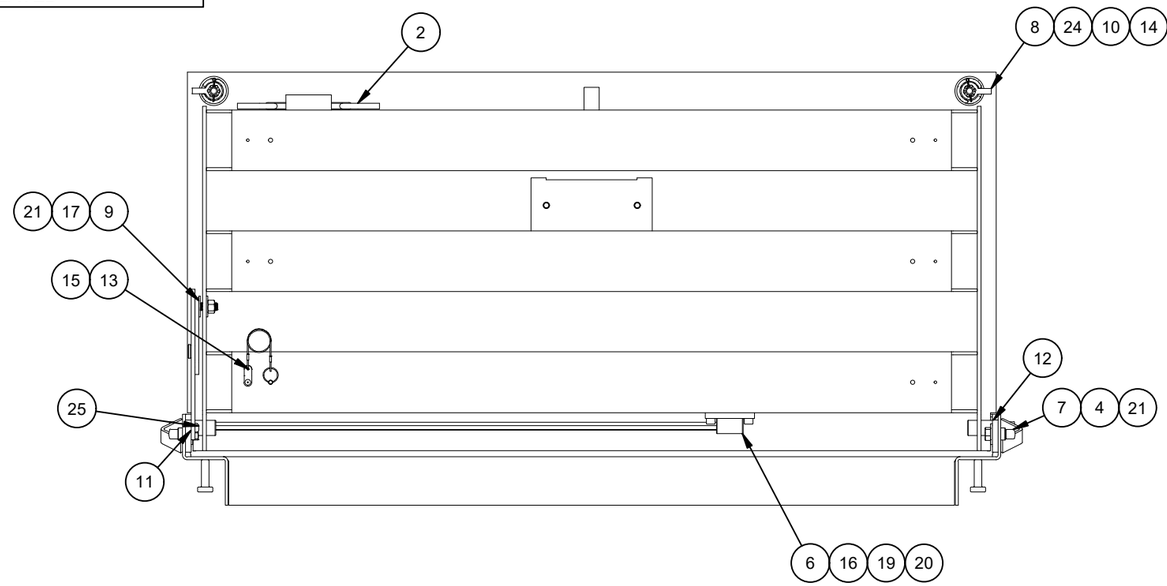

100023070.idw

MATERIAL FINISH: Galvanized	JENSEN METALTECH 450 E. GLENDALE AVE. SPARKS. NV 89431 775-352-2716 FAX: 755-358-8127 *JENSENMETALTECH.COM*	©2022 Jensen Precast- All rights reserved. All materials appearing as Jensen Precast documents and the like are proprietary work product and are protected under U.S. copyright and other laws. Unless in conjunction with business conducted with Jensen Precast, any use of Jensen Precast work product without express, written consent is prohibited, and recipient is prohibited from distributing any and all work product to non-approved third parties under penalty of civil action.	PART NUMBER & DESCRIPTION: 100023070 CAS2-4848-CH4-DP-G-FONT-OH06 — REV: A-4
MATERIAL SURFACE: Diamond Plate			WEIGHT: 508.52 Lbs — DRAWN BY: CNATION — SHEET: 2
			CREATED: 5/1/2018 — MODIFIED: 7/21/2022

BURN LIST - BOM

PART NUMBER	ITEM QTY	DESCRIPTION	STOCK NUMBER	MATERIAL	MASS
200013208	1	Door Component Steel Lap Bar 48in	100007735	STL ASTM A36 SM-HRPO RAW .250	7.099 lbmass
200054258	6	Door Component Steel Channel	100007821	SHT STL GR80 SM-HRPO RAW .1875	24.873 lbmass
200054261	1	Door Component Steel Plate, Bottom	100007736	SHT STL CQ DP RAW .25	101.658 lbmass
200054263	2	Frame Component Steel Frame Side, Cast In	100007734	STL ASTM A36 SM-HRPO 60X120 RAW .1875	23.074 lbmass
200054264	4	Door Component Steel Side Bar	100007735	STL ASTM A36 SM-HRPO RAW .250	3.755 lbmass
200054265	1	Door Component Steel Plate, Bottom	100007736	SHT STL CQ DP RAW .25	103.817 lbmass
200054266	2	Frame Component Steel Frame End, Cast In	100007734	STL ASTM A36 SM-HRPO 60X120 RAW .1875	27.422 lbmass

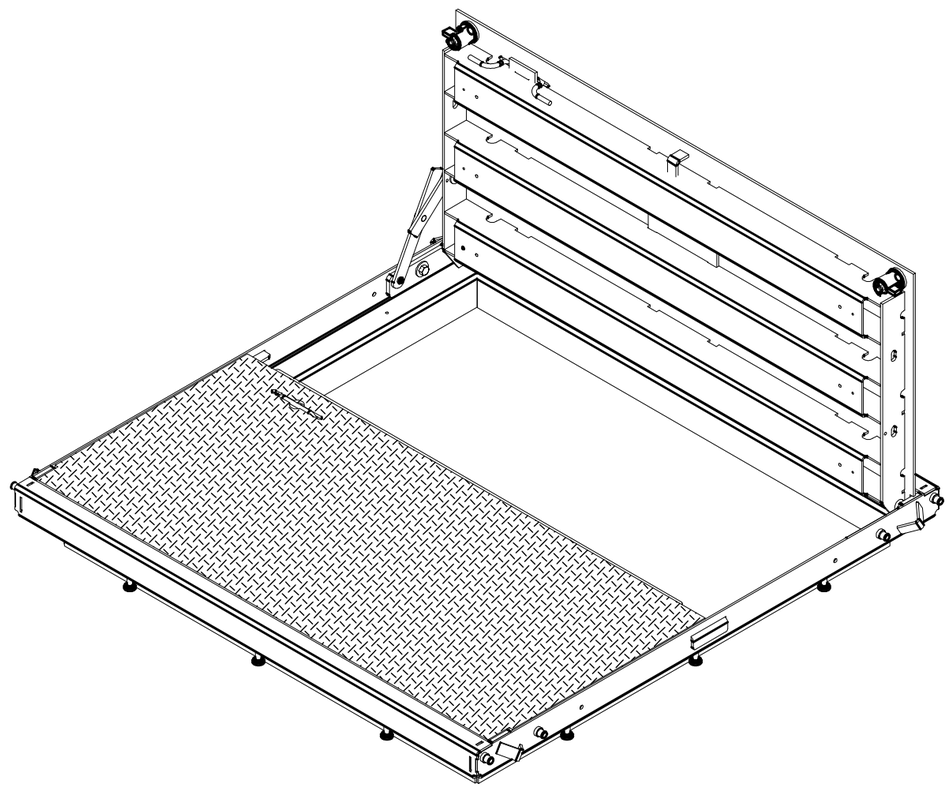

100023070.idw

MATERIAL FINISH: Galvanized

MATERIAL SURFACE: Diamond Plate

JENSEN METALTECH
450 E. GLENDALE AVE. SPARKS. NV 89431
775-352-2716 FAX: 755-358-8127
JENSENMETALTECH.COM

©2022 Jensen Precast- All rights reserved.
All materials appearing as Jensen Precast documents and the like are proprietary work product and are protected under U.S. copyright and other laws.
Unless in conjunction with business conducted with Jensen Precast, any use of Jensen Precast work product without express, written consent is prohibited, and recipient is prohibited from distributing any and all work product to non-approved third parties under penalty of civil action.

PART NUMBER & DESCRIPTION: 100023070 CAS2-4848-CH4-DP-G-FONT-OH06

REV: A-4

WEIGHT: 508.52 Lbs

DRAWN BY: CNATION

CREATED: 5/1/2018

MODIFIED: 7/21/2022

SHEET: 3

BILL OF MATERIALS

ITEM	UNIT QTY	QTY	PART NUMBER	DESCRIPTION
1	1	2	100007970	CAM TOWER CAST STEEL
2	1	3	200054258	Door Component Steel Channel
3	1	1	200054261	Door Component Steel Plate, Bottom
4	1	2	200054264	Door Component Steel Side Bar
5	1	1	100007646	HANDLE RETAINER STL
6	1	1	100007644	LEAF PULL HANDLE A36 3/8IN DIAMETER
7	1	1	100007647	LIFTING BRACKET STEEL LEAF
8	1	1	100007685	NAME PLATE BACKING PLATE

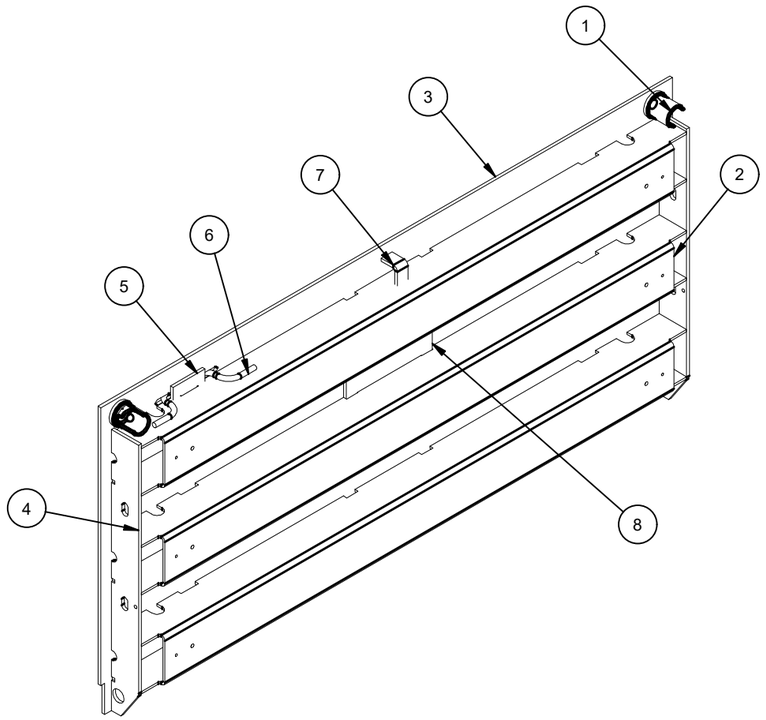

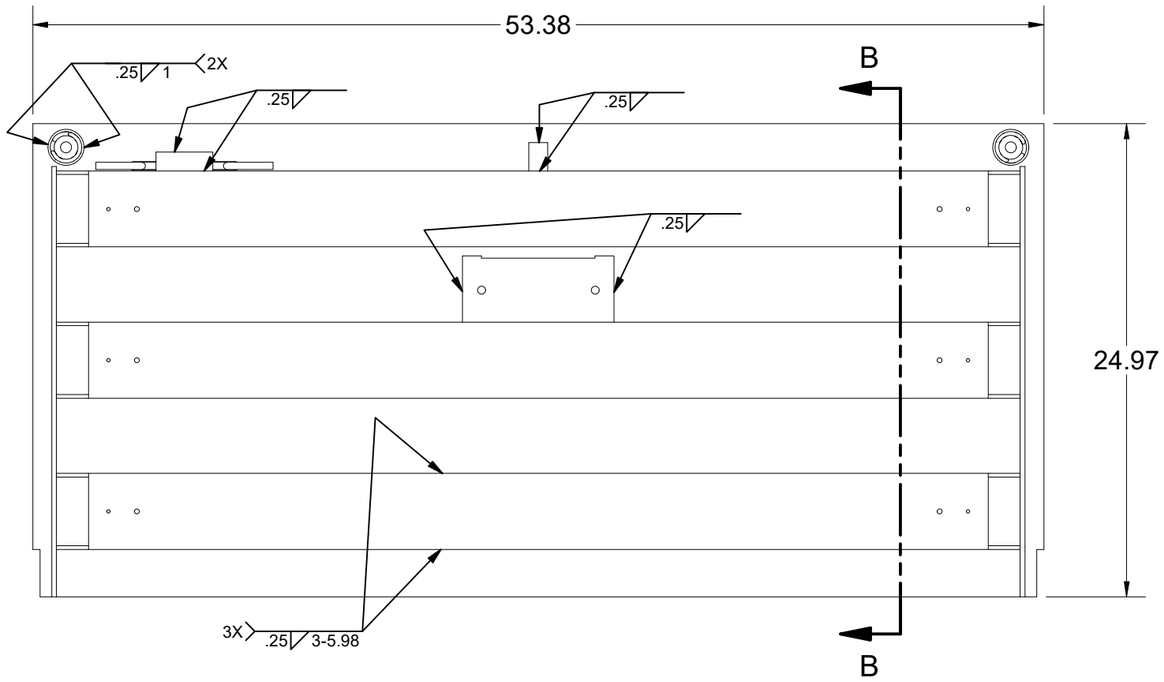

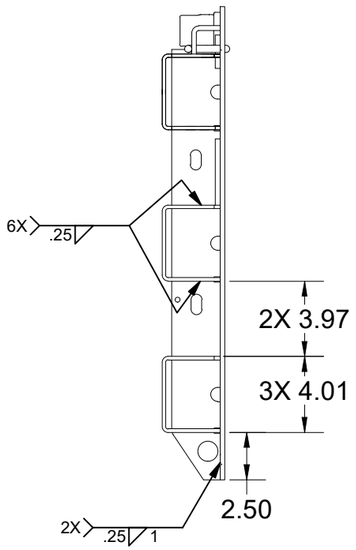

SECTION B-B



ROBOT DOOR
SYSTEM:55
FIX:21

MATERIAL FINISH: Raw	JENSEN METALTECH 450 E. GLENDALE AVE. SPARKS. NV 89431 775-352-2716 FAX: 755-358-8127 *JENSENMETALTECH.COM*	PART NUMBER & DESCRIPTION: 200054259 DAS2-T-4848-H4-DP-R-Robot Door	REV: A-3
MATERIAL SURFACE: Diamond Plate		WEIGHT: 187.48 Lbs CREATED: 4/23/2018	DRAWN BY: CNATION MODIFIED: 7/21/2022
			SHEET: 4

©2022 Jensen Precast- All rights reserved. All materials appearing as Jensen Precast documents and the like are proprietary work product and are protected under U.S. copyright and other laws. Unless in conjunction with business conducted with Jensen Precast, any use of Jensen Precast work product without express, written consent is prohibited, and recipient is prohibited from distributing any and all work product to non-approved third parties under penalty of civil action.

100023070.idw

BILL OF MATERIALS

ITEM	UNIT QTY	QTY	PART NUMBER	DESCRIPTION
2	1	3	200054258	Door Component Steel Channel
3	1	1	200013208	Door Component Steel Lap Bar 48in
4	1	1	200054265	Door Component Steel Plate, Bottom
5	1	2	200054264	Door Component Steel Side Bar
6	1	1	100007644	LEAF PULL HANDLE A36 3/8IN DIAMETER
7	1	1	100007647	LIFTING BRACKET STEEL LEAF

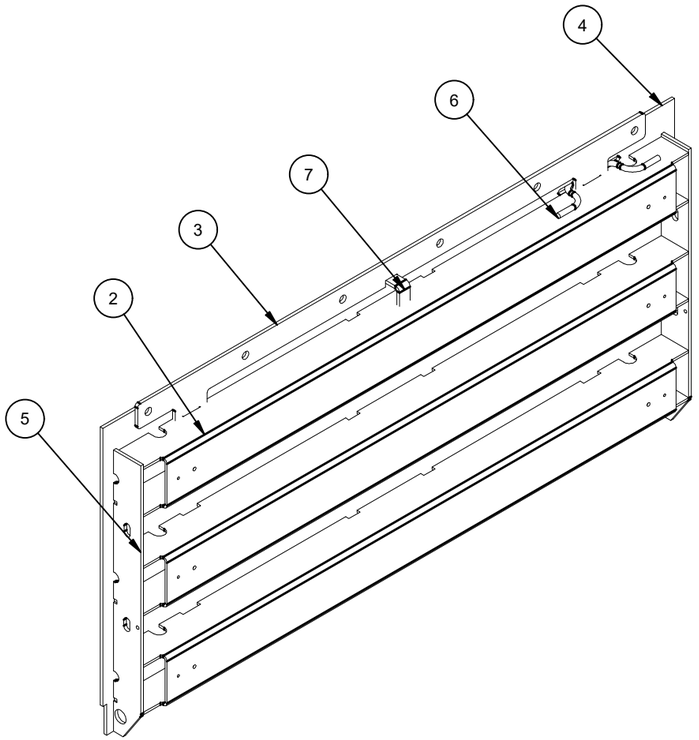

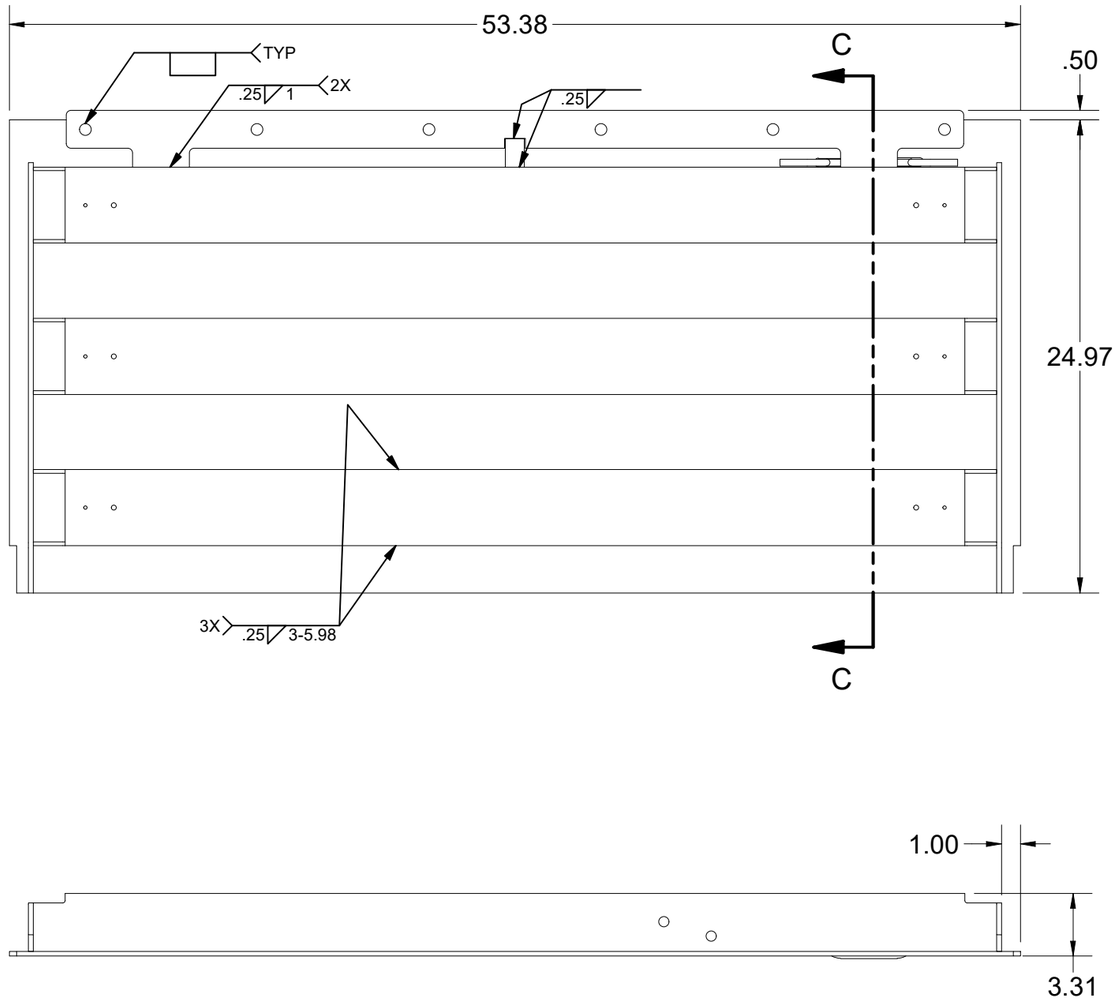

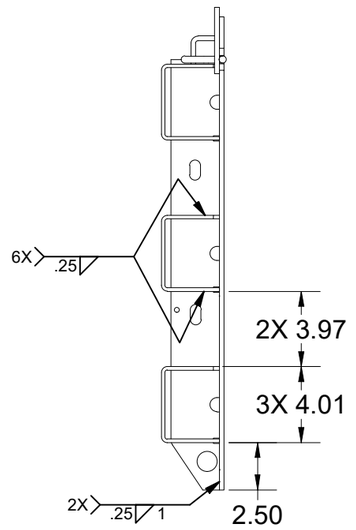

SECTION C-C

ROBOT DOOR
SYSTEM:55
FIX:21

MATERIAL FINISH: Raw	JENSEN METALTECH 450 E. GLENDALE AVE. SPARKS. NV 89431 775-352-2716 FAX: 755-358-8127 *JENSENMETALTECH.COM*	PART NUMBER & DESCRIPTION: 200054257 DAS2-B-4848-H4-DP-R-Robot Door	REV: A-3
MATERIAL SURFACE: Diamond Plate		WEIGHT: 193.28 Lbs CREATED: 4/23/2018	DRAWN BY: CNATION MODIFIED: 7/21/2022
			SHEET: 5

©2022 Jensen Precast- All rights reserved. All materials appearing as Jensen Precast documents and the like are proprietary work product and are protected under U.S. copyright and other laws. Unless in conjunction with business conducted with Jensen Precast, any use of Jensen Precast work product without express, written consent is prohibited, and recipient is prohibited from distributing any and all work product to non-approved third parties under penalty of civil action.

100023070.idw

BILL OF MATERIALS

ITEM	UNIT QTY	QTY	PART NUMBER	DESCRIPTION
1	1	4	200018691	FRAME BOLT DOUBLER SLOT
2	1	2	100007636	FRAME LATCH ANGLE - A36 - 4IN LONG
3	1	4	100007641	FRAME LIFTING BRACKET
4	1	2	200054266	Frame Component Steel Frame End, Cast In
5	1	2	200054263	Frame Component Steel Frame Side, Cast In
6	1	8	100007728	NUT SELF-CLINCH 1/2-13 S-0813-1 RAW
7	1	12	100007889	STUD NELSON WELD H4L-HEADED A36 1/2X2-1/8

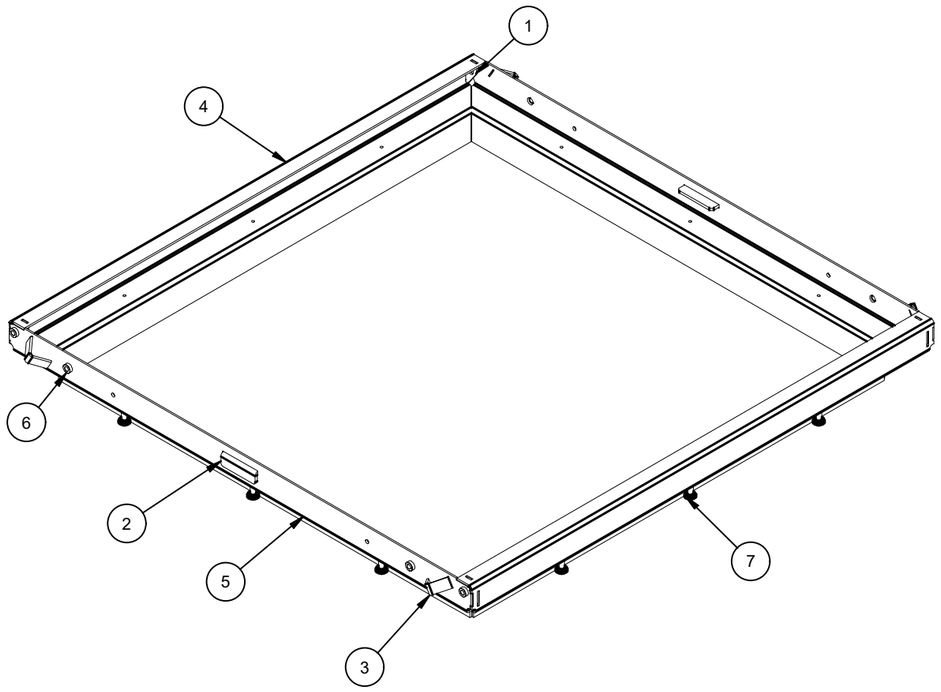

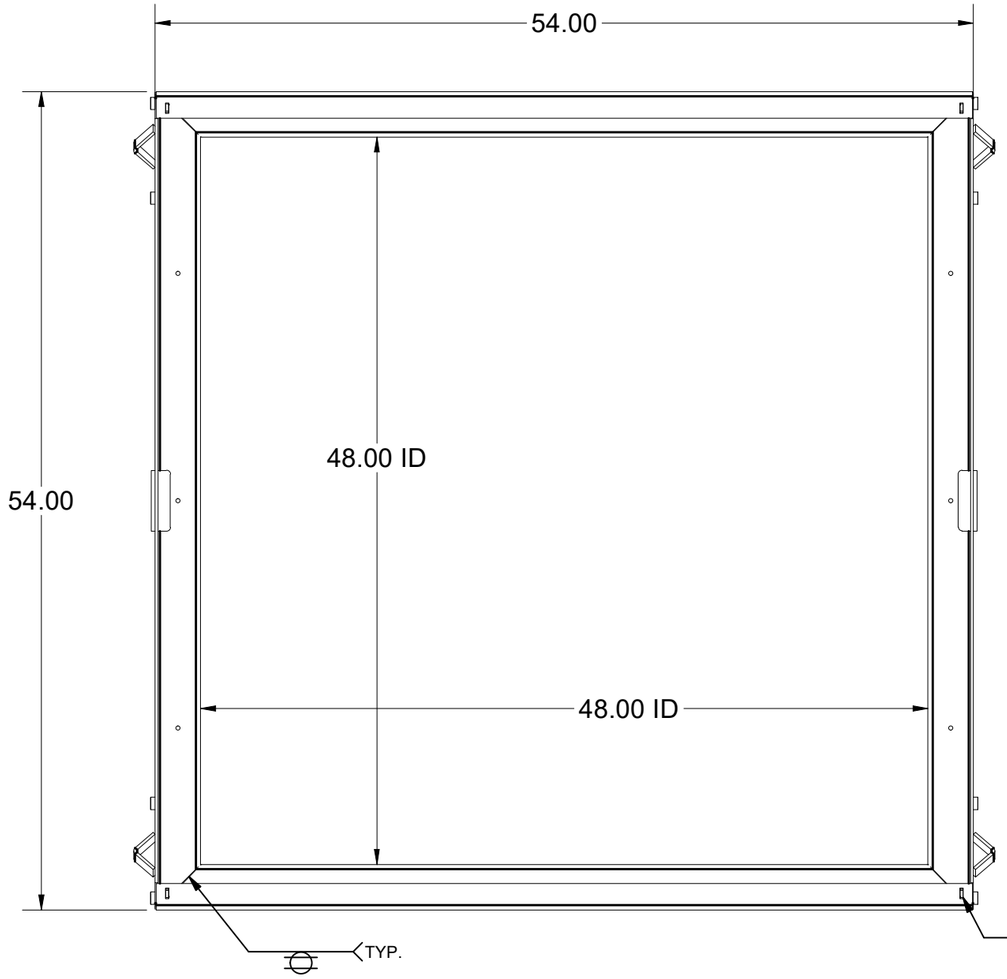

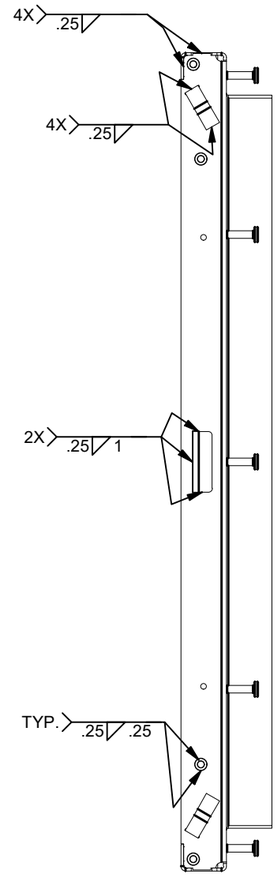

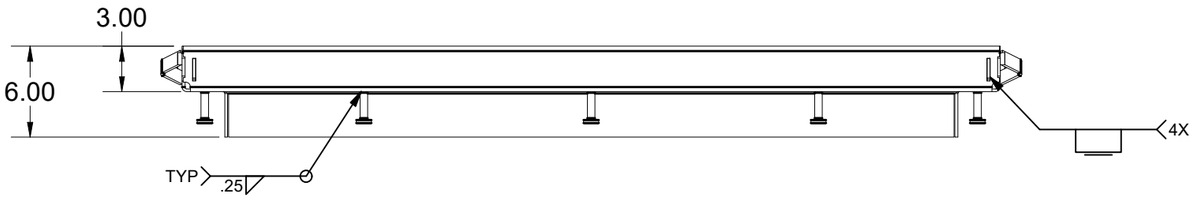

100023070.idw

MATERIAL FINISH: Raw	JENSEN METALTECH	©2022 Jensen Precast- All rights reserved. All materials appearing as Jensen Precast documents and the like are proprietary work product and are protected under U.S. copyright and other laws. Unless in conjunction with business conducted with Jensen Precast, any use of Jensen Precast work product without express, written consent is prohibited, and recipient is prohibited from distributing any and all work product to non-approved third parties under penalty of civil action.	PART NUMBER & DESCRIPTION: 200054262 FAS-4848-CH4-R-OH06	REV: A-3
MATERIAL SURFACE: Smooth	450 E. GLENDALE AVE. SPARKS. NV 89431 775-352-2716 FAX: 755-358-8127 *JENSENMETALTECH.COM*		WEIGHT: 140 Lbs / DRAWN BY: CNATION / CREATED: 4/17/2018 / MODIFIED: 7/21/2022	SHEET: 6

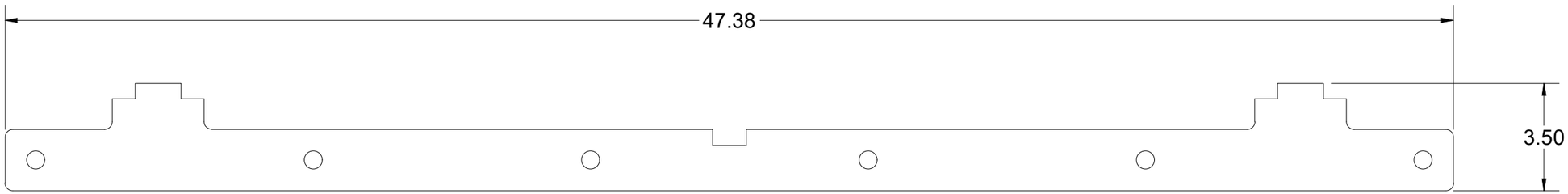

100023070.idw

BEND TABLE				MATERIAL IFS: 100007735
BEND RADIUS	V-OPENING	BEND ANGLE	BEND DEDUCTION	MATERIAL THK: 0.25
-	-	-	-	MAT DESCRIPTION: STL ASTM A36 SM-HRPO RAW .250

JENSEN METALTECH
450 E. GLENDALE AVE. SPARKS. NV 89431
775-352-2716 FAX: 755-358-8127
JENSENMETALTECH.COM

©2022 Jensen Precast- All rights reserved.
All materials appearing as Jensen Precast documents and the like are proprietary work product and are protected under U.S. copyright and other laws.
Unless in conjunction with business conducted with Jensen Precast, any use of Jensen Precast work product without express, written consent is prohibited, and recipient is prohibited from distributing any and all work product to non-approved third parties under penalty of civil action.

NAME & DESCRIPTION: 200013208 Door Component Steel Lap Bar 48in		REV: D-2
WEIGHT: 7.099 lbmass	DRAWN BY: CNATION	SHEET: 7 OF 13
CREATED: 7/21/2020	MODIFIED: 7/21/2022	

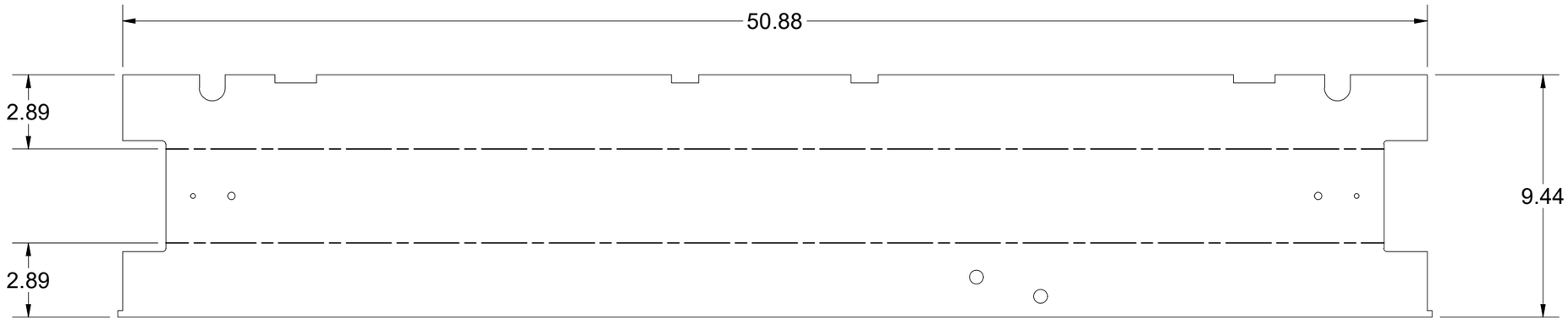

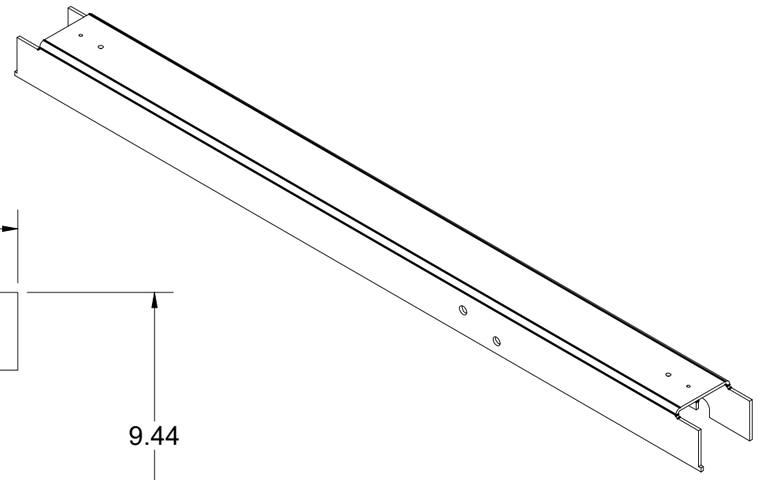

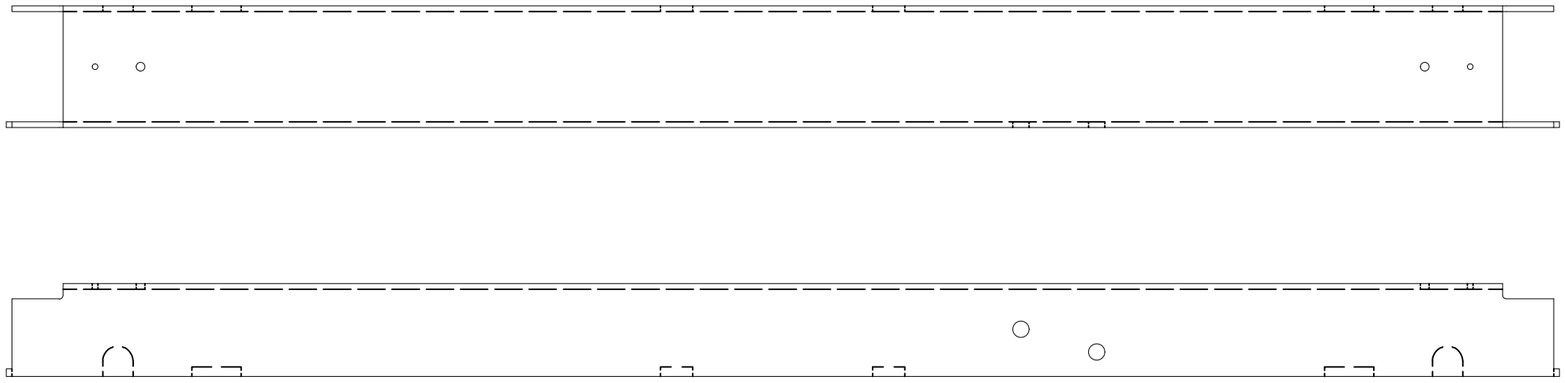

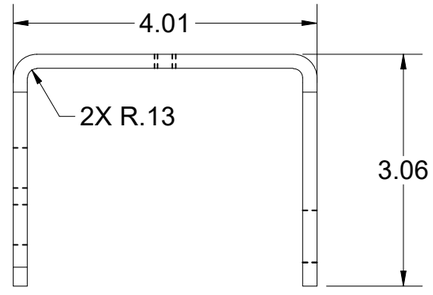

BEND TABLE				MATERIAL IFS: 100007821			
BEND RADIUS	V-OPENING	BEND ANGLE	BEND DEDUCTION	MATERIAL THK: 0.1875			
0.125	2"	90	0.3450	MAT DESCRIPTION: SHT STL GR80 SM-HRPO RAW .1875			

JENSEN METALTECH
450 E. GLENDALE AVE. SPARKS. NV 89431
775-352-2716 FAX: 755-358-8127
JENSENMETALTECH.COM

©2022 Jensen Precast- All rights reserved.
All materials appearing as Jensen Precast documents and the like are proprietary work product and are protected under U.S. copyright and other laws.
Unless in conjunction with business conducted with Jensen Precast, any use of Jensen Precast work product without express, written consent is prohibited, and recipient is prohibited from distributing any and all work product to non-approved third parties under penalty of civil action.

NAME & DESCRIPTION: 200054258 Door Component Steel Channel		REV: A-3
WEIGHT: 24.873 lbmass	DRAWN BY: CNATION	SHEET: 8 OF 13
CREATED: 2/7/2019	MODIFIED: 7/21/2022	

100023070.idw

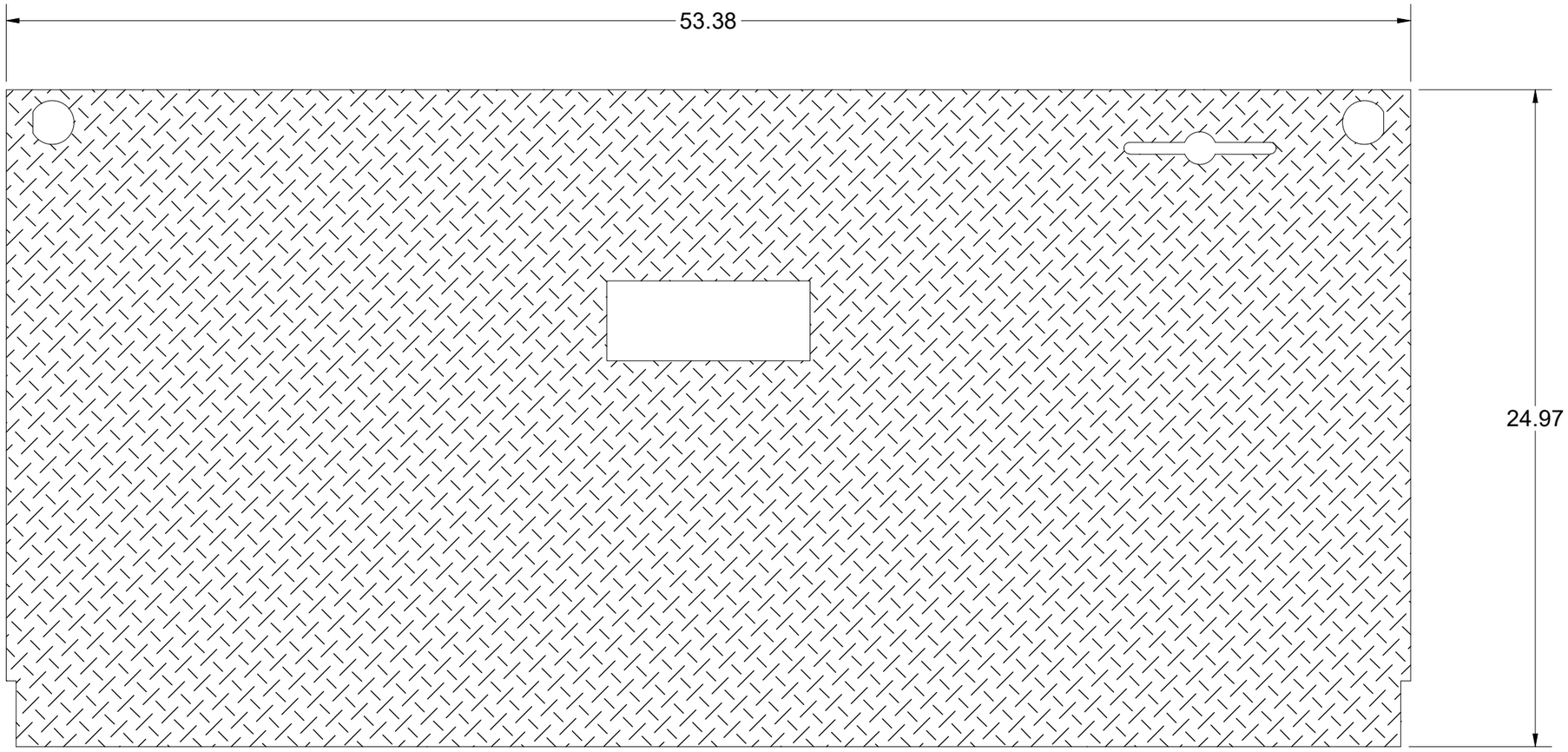

100023070.idw

BEND TABLE				MATERIAL IFS: 100007736
BEND RADIUS	V-OPENING	BEND ANGLE	BEND DEDUCTION	MATERIAL THK: 0.25
-	-	-	-	MAT DESCRIPTION: SHT STL CQ DP RAW .25

JENSEN METALTECH
450 E. GLENDALE AVE. SPARKS. NV 89431
775-352-2716 FAX: 755-358-8127
JENSENMETALTECH.COM

©2022 Jensen Precast- All rights reserved.
All materials appearing as Jensen Precast documents and the like are proprietary work product and are protected under U.S. copyright and other laws.
Unless in conjunction with business conducted with Jensen Precast, any use of Jensen Precast work product without express, written consent is prohibited, and recipient is prohibited from distributing any and all work product to non-approved third parties under penalty of civil action.

NAME & DESCRIPTION: 200054261 Door Component Steel Plate, Bottom		REV: A-2
WEIGHT: 101.658 lbmass	DRAWN BY: CNATION	SHEET: 9 OF 13
CREATED: 1/2/2019	MODIFIED: 7/21/2022	

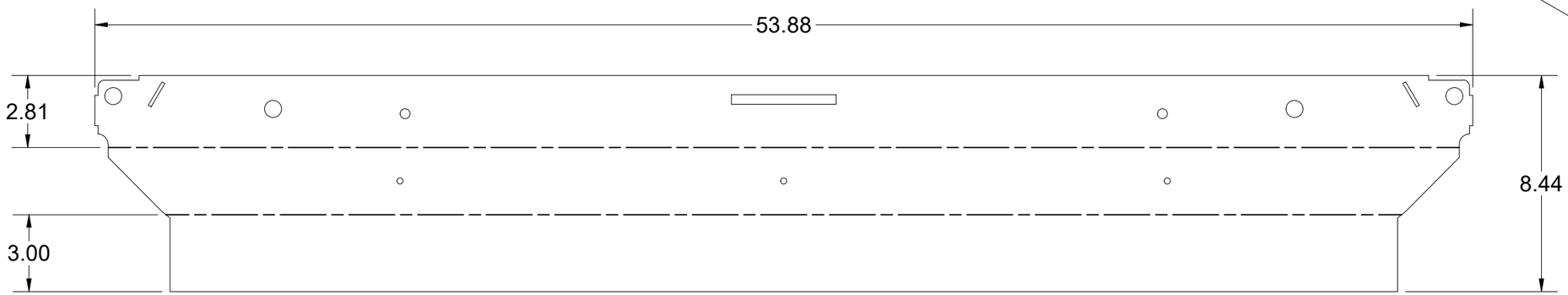

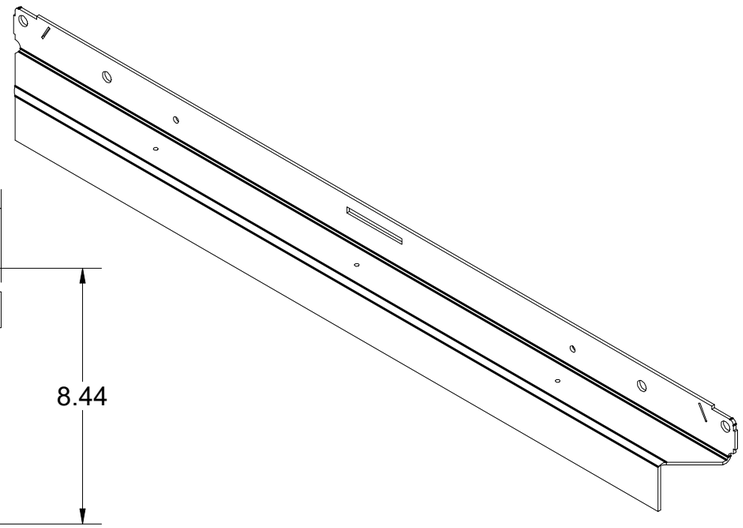

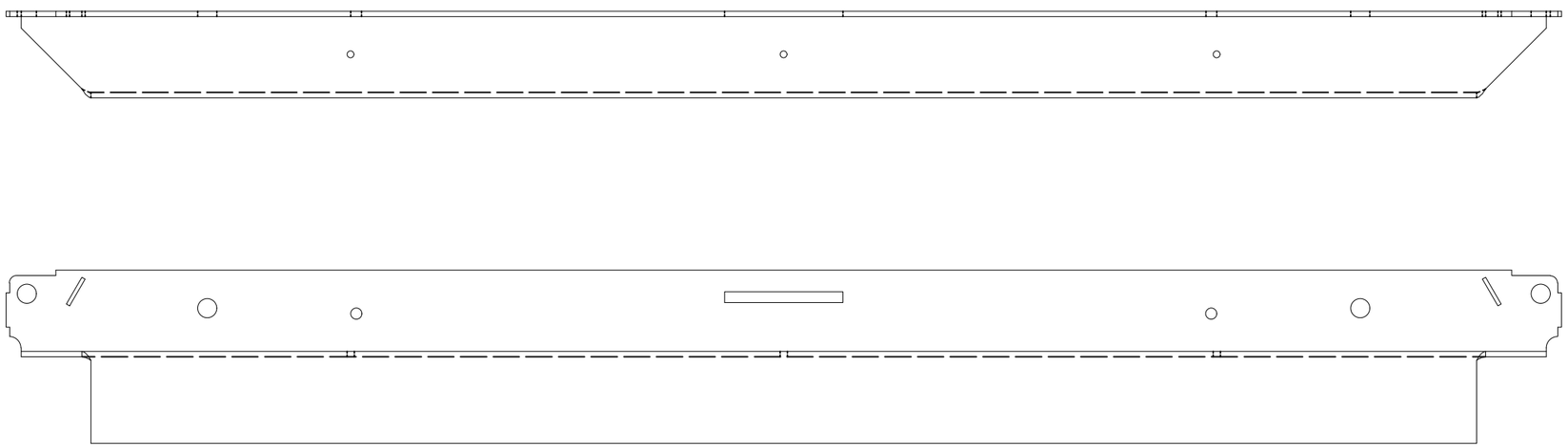

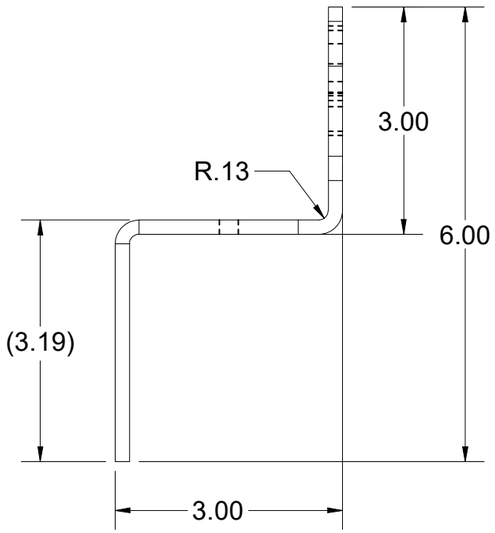

BEND TABLE				MATERIAL IFS: 100007734		NAME & DESCRIPTION: 200054263	REV:
BEND RADIUS	V-OPENING	BEND ANGLE	BEND DEDUCTION	MATERIAL THK: 0.1875		Frame Component Steel Frame Side, Cast In	A-2
0.125	2"	90	0.3750	MAT DESCRIPTION: STL ASTM A36 SM-HRPO 60X120 RAW .1875		WEIGHT: 23.074 lbmass / DRAWN BY: CNATION	SHEET: 10 OF 13
						CREATED: 1/2/2019 / MODIFIED: 7/21/2022	

JENSEN METALTECH
450 E. GLENDALE AVE. SPARKS. NV 89431
775-352-2716 FAX: 755-358-8127
JENSENMETALTECH.COM

©2022 Jensen Precast- All rights reserved.
All materials appearing as Jensen Precast documents and the like are proprietary work product and are protected under U.S. copyright and other laws.
Unless in conjunction with business conducted with Jensen Precast, any use of Jensen Precast work product without express, written consent is prohibited, and recipient is prohibited from distributing any and all work product to non-approved third parties under penalty of civil action.

100023070.idw

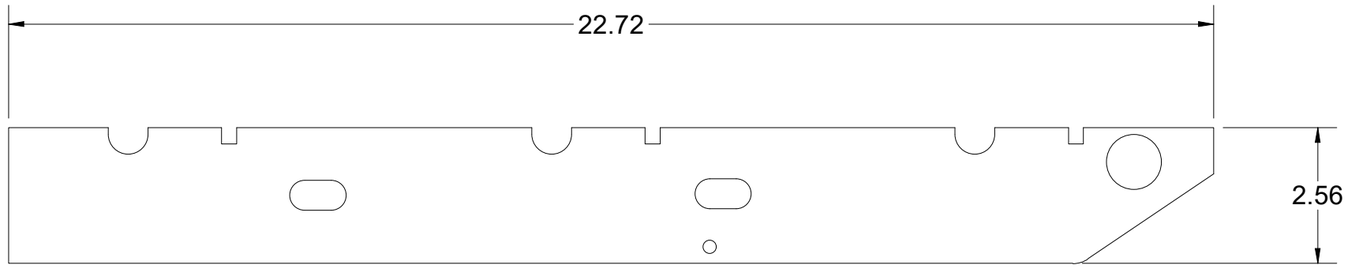

BEND TABLE				MATERIAL IFS: 100007735
BEND RADIUS	V-OPENING	BEND ANGLE	BEND DEDUCTION	MATERIAL THK: 0.25
-	-	-	-	MAT DESCRIPTION: STL ASTM A36 SM-HRPO RAW .250

JENSEN METALTECH
450 E. GLENDALE AVE. SPARKS. NV 89431
775-352-2716 FAX: 755-358-8127
JENSENMETALTECH.COM

©2022 Jensen Precast- All rights reserved.
All materials appearing as Jensen Precast documents and the like are proprietary work product and are protected under U.S. copyright and other laws.
Unless in conjunction with business conducted with Jensen Precast, any use of Jensen Precast work product without express, written consent is prohibited, and recipient is prohibited from distributing any and all work product to non-approved third parties under penalty of civil action.

NAME & DESCRIPTION:		REV:
200054264 Door Component Steel Side Bar		A-2
WEIGHT: 3.755 lbmass	DRAWN BY: CNATION	SHEET: 11 OF 13
CREATED: 1/3/2019	MODIFIED: 7/21/2022	

100023070.idw

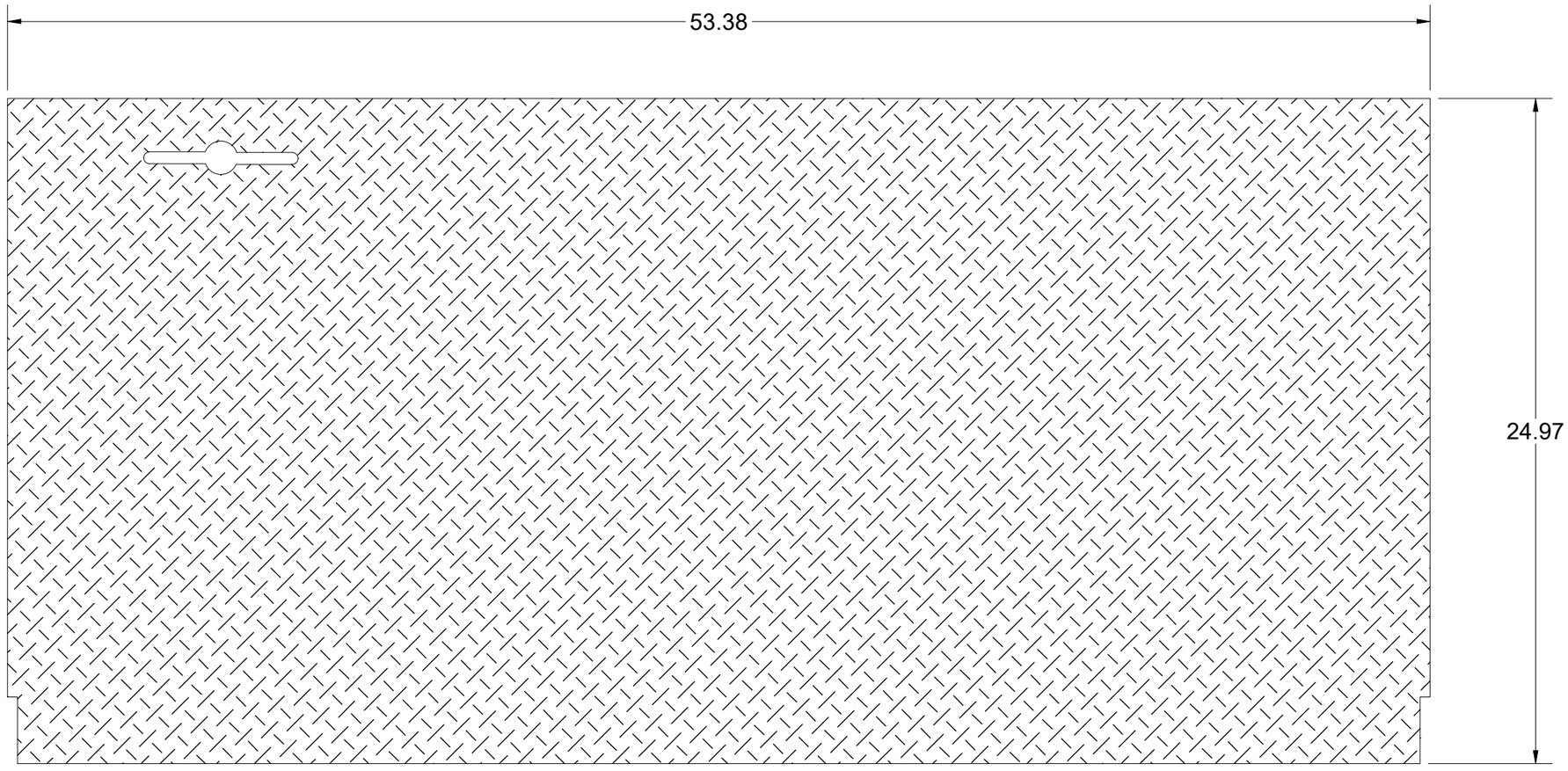

100023070.idw

BEND TABLE				MATERIAL IFS: 100007736			
BEND RADIUS	V-OPENING	BEND ANGLE	BEND DEDUCTION	MATERIAL THK: 0.25			
-	-	-	-	MAT DESCRIPTION: SHT STL CQ DP RAW .25			

JENSEN METALTECH
450 E. GLENDALE AVE. SPARKS. NV 89431
775-352-2716 FAX: 755-358-8127
JENSENMETALTECH.COM

©2022 Jensen Precast- All rights reserved.
All materials appearing as Jensen Precast documents and the like are proprietary work product and are protected under U.S. copyright and other laws.
Unless in conjunction with business conducted with Jensen Precast, any use of Jensen Precast work product without express, written consent is prohibited, and recipient is prohibited from distributing any and all work product to non-approved third parties under penalty of civil action.

NAME & DESCRIPTION: 200054265 Door Component Steel Plate, Bottom		REV: A-2
WEIGHT: 103.817 lbmass	DRAWN BY: CNATION	SHEET: 12 OF 13
CREATED: 1/3/2019	MODIFIED: 7/21/2022	

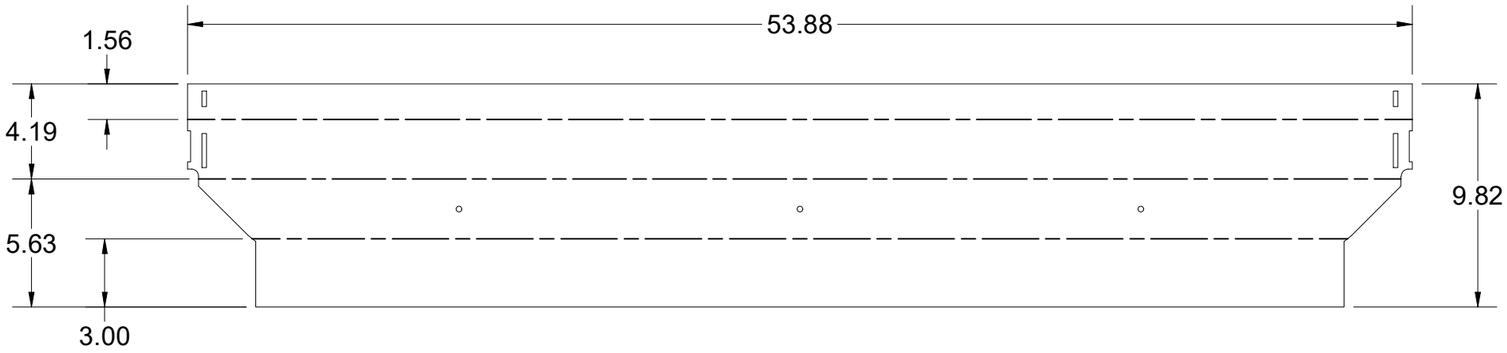

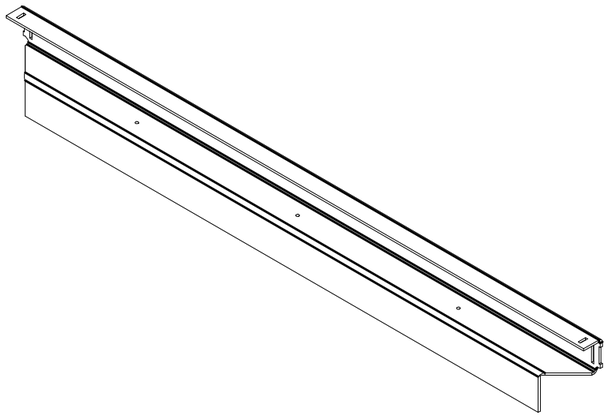

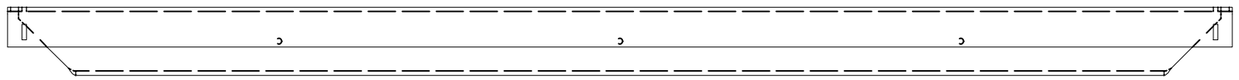

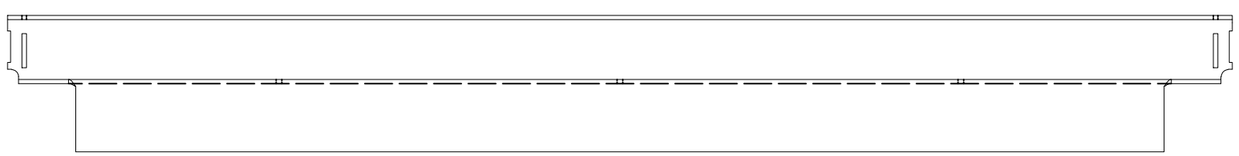

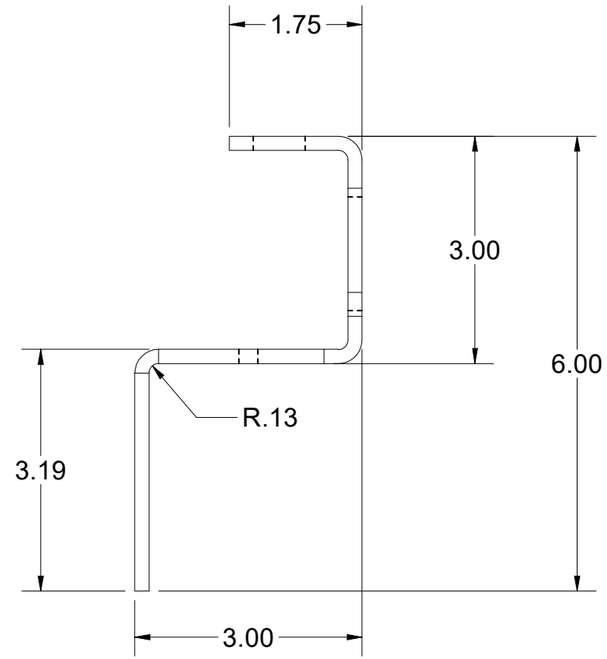

BEND TABLE			
BEND RADIUS	V-OPENING	BEND ANGLE	BEND DEDUCTION
0.125	2"	90	0.3750

MATERIAL IFS: 100007734

MATERIAL THK: 0.1875

MAT DESCRIPTION: STL ASTM A36 SM-HRPO 60X120 RAW .1875

JENSEN METALTECH
450 E. GLENDALE AVE. SPARKS. NV 89431
775-352-2716 FAX: 755-358-8127
JENSENMETALTECH.COM

©2022 Jensen Precast- All rights reserved.
All materials appearing as Jensen Precast documents and the like are proprietary work product and are protected under U.S. copyright and other laws.
Unless in conjunction with business conducted with Jensen Precast, any use of Jensen Precast work product without express, written consent is prohibited, and recipient is prohibited from distributing any and all work product to non-approved third parties under penalty of civil action.

NAME & DESCRIPTION: 200054266
Frame Component Steel Frame End, Cast In

REV: A-2

WEIGHT: 27.422 lbmass

DRAWN BY: CNATION

CREATED: 3/28/2019

MODIFIED: 7/21/2022

SHEET: 13 OF 13

100023070.idw