NOTES
■ FOR COMPLETE DESIGN AND PRODUCT INFORMATION CONTACT JENSEN PRECAST.

BILL OF MATERIALS

ITEM	UNIT QTY	QTY	PART NUMBER	DESCRIPTION
1	74.856 ft^3	74.856 ft^3	100011425	CONCRETE MIX GENERIC 5000 PSI
2	1	1	300123666	REINFORCING MAT 300123666
3	1	1	300123667	REINFORCING MAT 300123667
4	1	3	100007133	ANCHOR UTILITY .671DIA 7.625-SLAB GALV P75 8UA671

100020799.idw

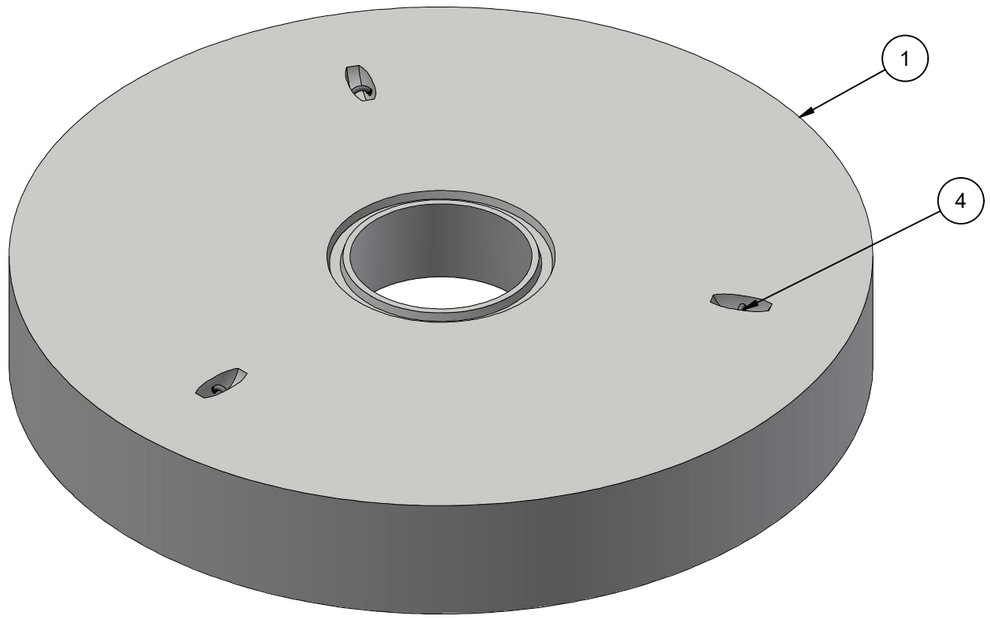

ISOMETRIC VIEW

LIFTING NOTES
■ THIS CONCRETE PRODUCT IS DESIGNED TO BE LIFTED AT 2500 PSI WITH 3 LIFT CONNECTIONS EQUALLY LOADED TO 3 LIFTING POINTS AT A MINIMUM 60° SLING ANGLE, MEASURED FROM HORIZONTAL.
■ SLING LEG CAPACITY REQUIRED: 3,900 LBS.

REVISION HISTORY			
REV	DESCRIPTION	DATE	BY
A	INITIAL RELEASE - LEGACY DRAWING	11/06/2020	VGL

BURY DEPTH:	0.0' - 5.0' to Top of Section		
WATER LEVEL:	0.0'	WEIGHT:	11254.61 Lbs
DESIGN SPEC:	ASTM C890,ACI 318	LOADING SPEC:	A-16 (AASHTO HS20-44)
REINFORCEMENT TYPE:	Rebar	LIFTING TYPE:	A-Anchor

JENSEN PRECAST EST. 1968

WWW.JENSENPRECAST.COM

©2021 Jensen Precast- All rights reserved.
All materials appearing as Jensen Precast documents and the like are proprietary work product and are protected under U.S. copyright and other laws.
Unless in conjunction with business conducted with Jensen Precast, any use of Jensen Precast work product without express, written consent is prohibited, and recipient is prohibited from distributing any and all work product to non-approved third parties under penalty of civil action.

DESCRIPTION:	Manhole D96114x17.5 Flat Top TU 24 C CASTING LAYOUT			REV: A-2
PART NUMBER:	100020799	DRAWN BY:	V. Lund	SHEET: 1 OF 2
CREATED:	1/8/2020	MODIFIED:	3/11/2021	

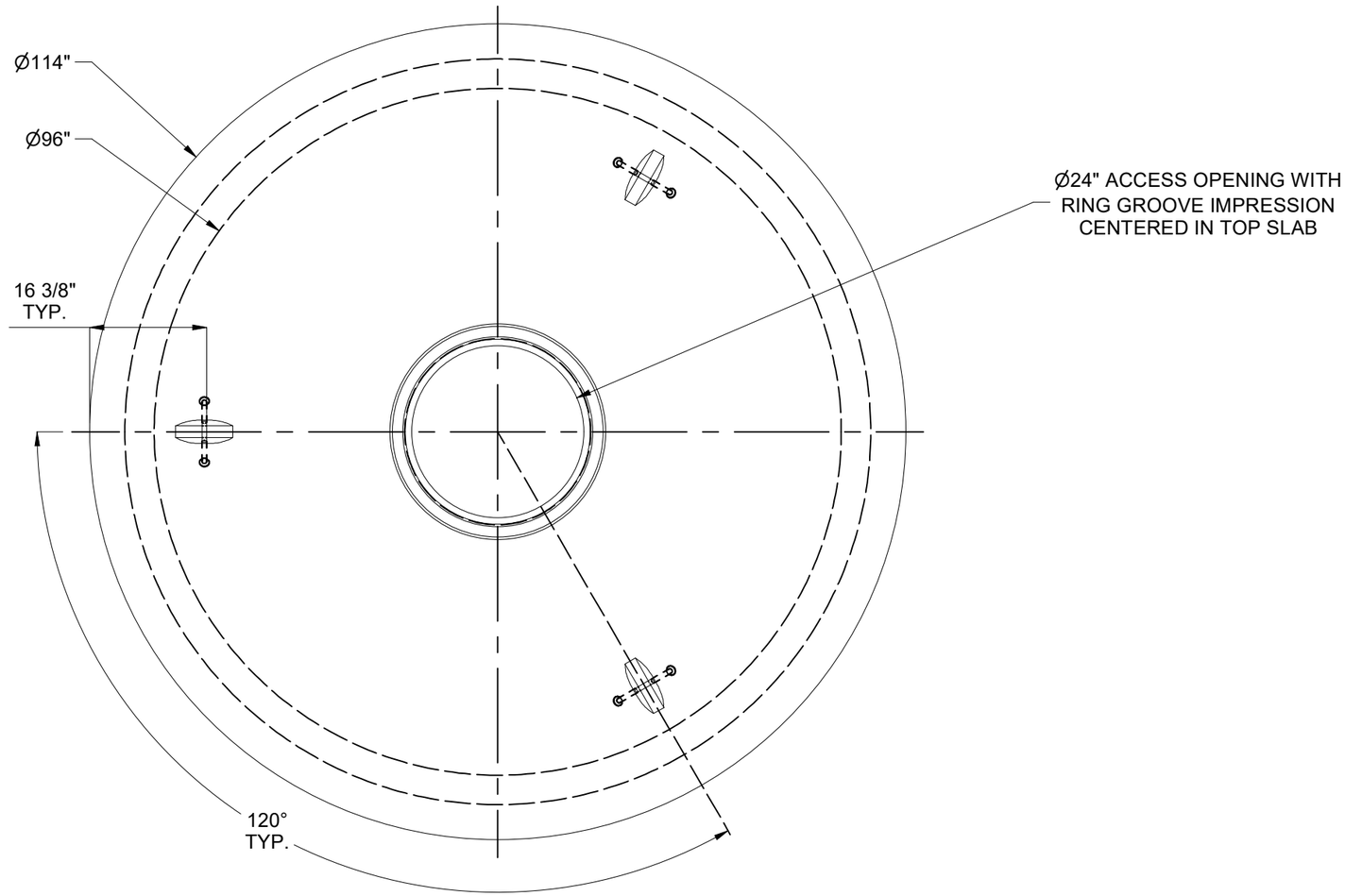

PLAN VIEW

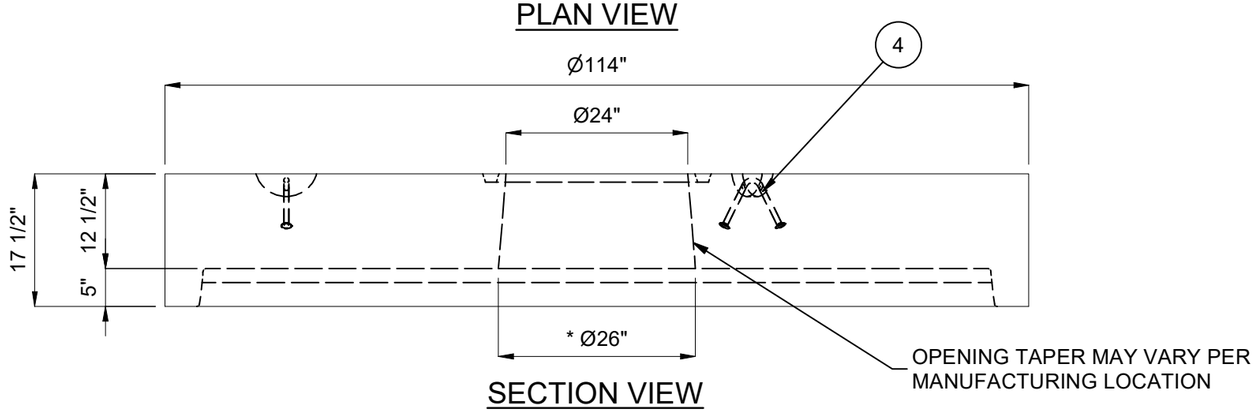

SECTION VIEW

BURY DEPTH:	0.0' - 5.0' to Top of Section		
WATER LEVEL:	0.0'	WEIGHT:	11254.61 Lbs
DESIGN SPEC:	ASTM C890,ACI 318	LOADING SPEC:	A-16 (AASHTO HS20-44)
REINFORCEMENT TYPE:	Rebar	LIFTING TYPE:	A-Anchor

JENSEN PRECAST EST. 1968

WWW.JENSENPRECAST.COM

©2021 Jensen Precast- All rights reserved.
All materials appearing as Jensen Precast documents and the like are proprietary work product and are protected under U.S. copyright and other laws.
Unless in conjunction with business conducted with Jensen Precast, any use of Jensen Precast work product without express, written consent is prohibited, and recipient is prohibited from distributing any and all work product to non-approved third parties under penalty of civil action.

DESCRIPTION:	Manhole D96114x17.5 Flat Top TU 24 C CASTING DRAWING		
PART NUMBER:	100020799	DRAWN BY:	V. Lund
CREATED:	1/8/2020	MODIFIED:	3/11/2021

REV: A-2

SHEET: 2 OF 2

100020799.idw