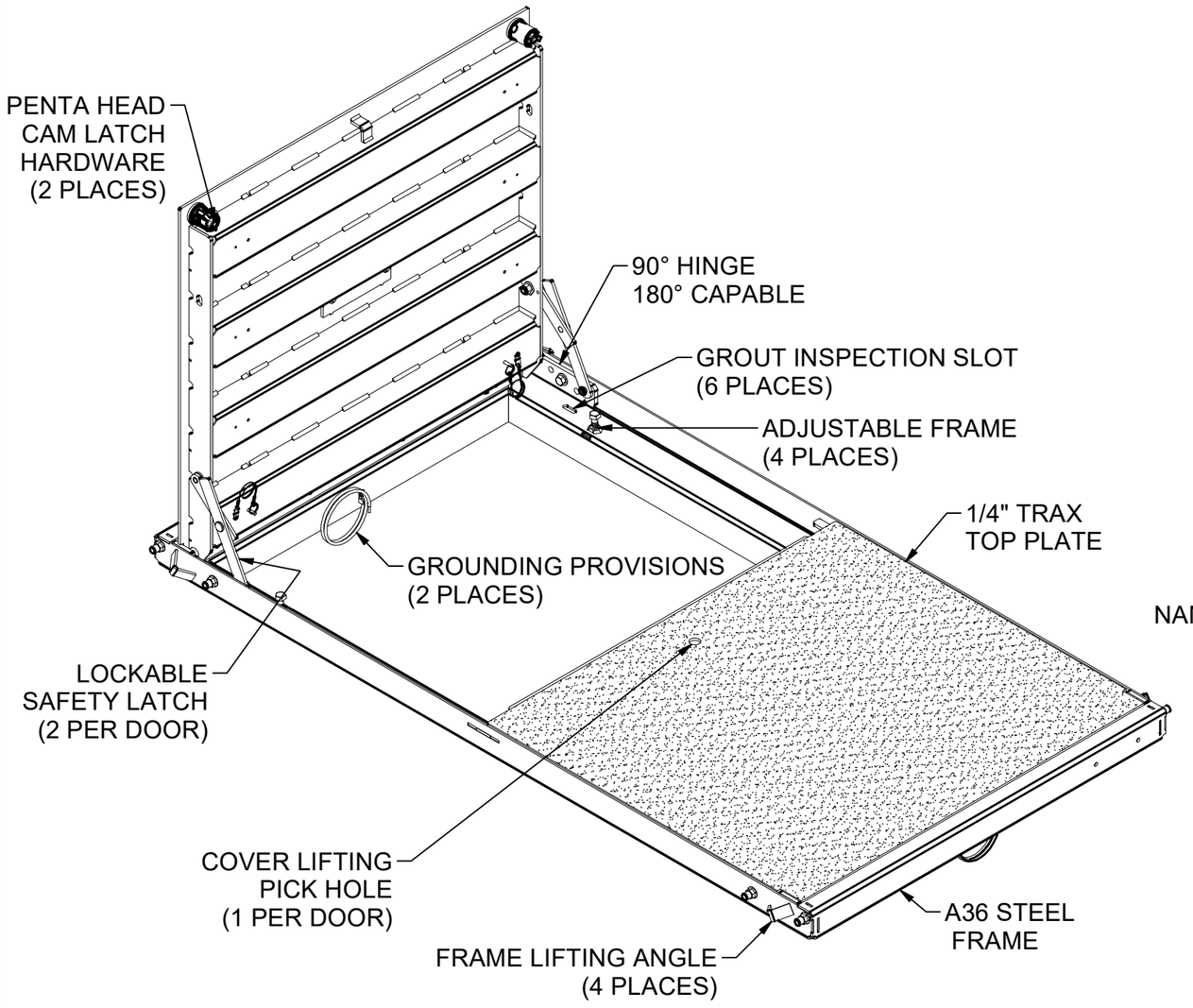

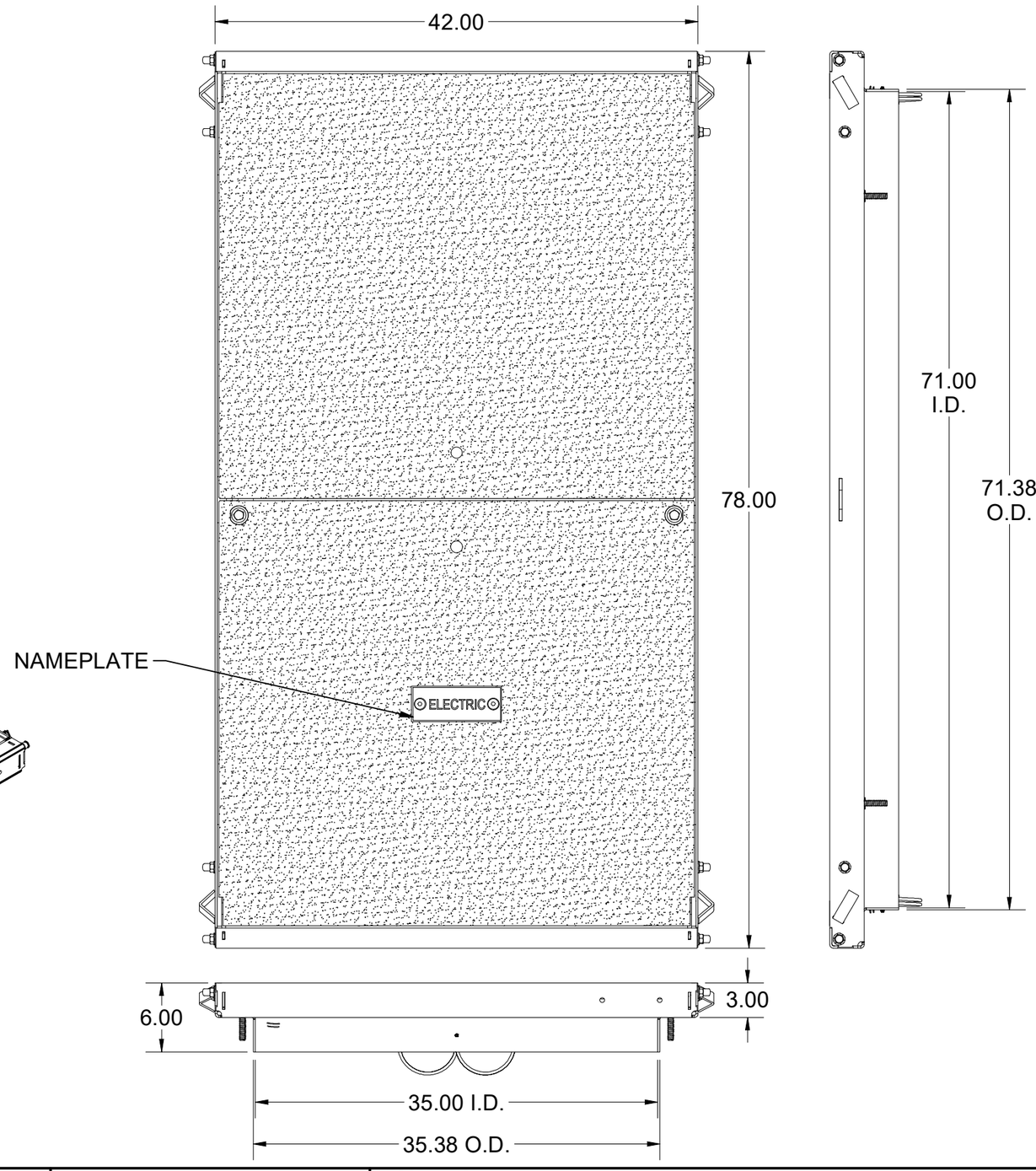

100017385.idw

DESIGNED FOR ROBOT WELDING

LOADING CRITERIA: ASTM C1802 Load Level 04

16,000 lb load on 10" x 20" footprint, without impact restricted to parking spaces and areas within close proximity of roadways.

SURFACE:	TraxPlate™	FINISH:	Galvanized
WEIGHT:	498.48 lbs	MARKING:	As Noted

Infrastructure JENSEN
527 Dunn Circle, Sparks, NV 89431
775-352-2716 FAX: 755-358-8127
JENSENMETALTECH.COM

©2026 Jensen Infrastructure - All rights reserved.
All materials appearing as Jensen Infrastructure documents and the like are proprietary work product and are protected under U.S. copyright and other laws. Unless in conjunction with business conducted with Jensen Infrastructure , any use of Jensen Infrastructure work product without express, written consent is prohibited, and recipient is prohibited from distributing any and all work product to non-approved third parties under penalty of civil action.
This product shall only be produced in a Jensen Infrastructure facility.

DESCRIPTION:	CAS2-3672-AH4-TRX-G-CL-NVE-OH06 36x72 Standard Cover Assembly (Loading Criteria Per ASTM C1802 Load Level 04, Steel, Hinged, Handle (1 Per Door), TraxPlate™, Galvanized, N/A, NV Energy) 06	REV:	A-2
PART NUMBER:	100017385	DRAWN BY:	R. Dohr
CREATED:	8/5/2024	MODIFIED:	4/13/2026
		SHEET:	1

BILL OF MATERIALS

ITEM	ITEM QTY	QTY	PART NUMBER	DESCRIPTION	PART NAME
1	1	1	200091848	FAS-3672-AH-R-OH06	200091848
2	1	1	200091882	DAS2-T-3672-H4-TRX-R-CL	200091882
3	1	1	200091884	DAS2-B-3672-H4-TRX-R	200091884
4	4	4	100007869	BOLT SHCS 1/2-13 X 1-3/4 SS	100007869
5	4	4	100003823	Hex Bolt 1/2-13 UNC ZINC - PT - 1.5"	100003823
6	2	2	100007729	HEX NUT SLOTTED CASTLE HEAD 1/2-13 SS	100007729
7	2	2	100007857	NUT FINGER 1/2-13 BRASS	100007857
8	2	2	100007915	SPRING COMPRESSION 055 X 5/8 X 7/8 LONG	100007915
9	2	2	100007918	Cotter Pin 0.094x1.25" 18-8SS	100007918
10	8	8	100007939	CAP VINYL .467 X 1/2	100007939
11	4	4	100007859	RIVET NUT 3/8-16 FLAT KNURLED	100007859
12	2	2	100007896	TORSION HEX ROD 9/16 X 36 RAW	100007896
13	4	4	100007933	SAFETY LATCH ASSY FOR UNI AND 90 D HINGE	100007933
14	4	4	100007924	LANYARD 3/64 W/PIN COATED SS	100007924
15	4	4	100007882	Rivet Blind Grip .1875" Large Domed Head Range-0.376-0.5" Steel	100007882
16	12	12	100011418	WASHER FLAT 1/2 NARROW ZINC	100011418
17	2	2	100007672	SPRING MOUNT ASSY .562	100007672
18	2	2	100007661	Hinge Assembly, Left, 9/16, Steel	100007661
19	2	2	100007666	Hinge Assembly, Right, Steel	100007666
20	8	8	100026256	LOW-STRENGTH STEEL FLANGE NUT, 1/2" - 13 THREAD SIZE	100026256
21	4	4	100007876	Bolt Shoulder Socket Head - 3/8-16 UNC - SD-0.5" - SL-0.3125" - Grade 5 - Zinc	100007876
22	2	2	100007749	BOLT PENTA 1/2-13 UNC 0.875 HEAD 2.25L SS DRILLED	100007749
23	4	4	100007492	HEX NUT NYLOCK - 1/2-13 UNC - GR5 - ZINC	100007492
24	1	1	100007101	NAME PLATE STEEL - ELECTRIC	100007101
25	2	2	100007733	Bolt Socket Flat Countersunk Head - 1/2-13 UNC - Grade 5 - Zinc - FT - 1"	100007733
26	2	2	100007917	CHAIR LUG 1/4-20 ALUM	100007917
27	2	72.000 in	100007936	WIRE THN STRANDED COPPER GRN COAT #6	100007936
28	4	4	100007755	HEX COIL BOLT 1/2 x 3-1/2 SS	100007755
29	2	2	100042340	Zinc-Plated Steel Thread-Cutting Screws for Metal, External Hex Drive, 1/4-20 Thread Size, 1/2" Long	100042340
30	4	4	100007873	BOLT SOCKET CAP - 3/8-16 UNC - 1.25 - ZINC	100007873

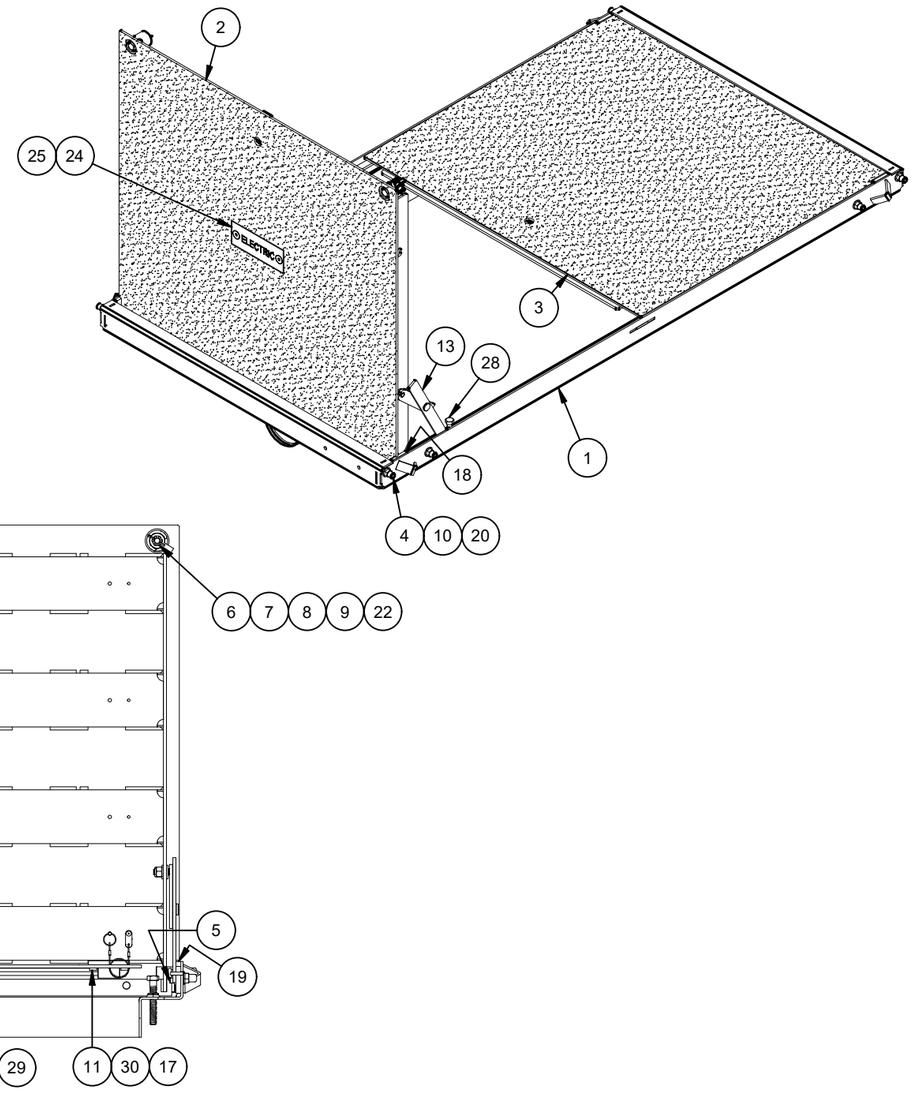

100017385.idw

REVISION HISTORY	
DESCRIPTION	DATE
INVENTOR CONVERSION. ADJUSTED WELD DIMENSIONS, REDUCED HINGE HOLE DIAMETER, REPLACED LAP BAR	8/5/24
58027-6 MOVED LAP BAR LOCATOR HOLES TO MATCH UPDATED 36" LAP BAR	4/28/2025
REVISED REAR LAP BAR TO ADDRESS WARPING ISSUES. MADE NAMEPLATE SLOT LARGER TO ACCOMMODATE GALV. REPLACED GROUNDING LUG SCREW. REVERTED WELDS TO SOLIDWORKS DIMENSIONS	4/10/2026

MATERIAL FINISH: Galvanized

MATERIAL SURFACE: TraxPlate™

Infrastructure JENSEN

527 Dunn Circle, Sparks, NV 89431
775-352-2716 FAX: 755-358-8127
JENSENMETALTECH.COM

©2026 Jensen Infrastructure - All rights reserved. All materials appearing as Jensen Infrastructure documents and the like are proprietary work product and are protected under U.S. copyright and other laws. Unless in conjunction with business conducted with Jensen Infrastructure , any use of Jensen Infrastructure work product without express, written consent is prohibited, and recipient is prohibited from distributing any and all work product to non-approved third parties under penalty of civil action. This product shall only be produced in a Jensen Infrastructure facility.

PART NUMBER & DESCRIPTION: 100017385 CAS2-3672-AH4-TRX-G-CL-NVE-OH06

REV: A-2

WEIGHT: 498.48 Lbs

DRAWN BY: R. Dohr

CREATED: 8/5/2024

MODIFIED: 4/13/2026

SHEET: 2

BURN LIST - BOM

PART NAME	ITEM QTY	QTY	DESCRIPTION	STOCK NUMBER	MATERIAL	MASS	SHEET
200087246	1	4.842 lbmass	Door Component Steel Lap Bar 36in, 2.5" Stiffener Offset	100007735	STL ASTM A36 SM-HRPO RAW .250	4.842 lbmass	07
200091824	1	1.876 lbmass	NAME PLATE BACKING PLATE	100007735	STL ASTM A36 SM-HRPO RAW .250	1.876 lbmass	08
200091849	2	71.322 lbmass	Frame Component Steel Frame Side, Adjustable	100007734	STL ASTM A36 SM-HRPO 60X120 RAW .1875	35.690 lbmass	09
200091850	2	43.578 lbmass	Frame Component Steel Frame End, Adjustable	100007734	STL ASTM A36 SM-HRPO 60X120 RAW .1875	21.787 lbmass	10
200091852	8	94.040 lbmass	Door Component Steel Channel	100007840	SHT STL GR80 GA-11 SM-HR RAW .1196	11.755 lbmass	11
200091853	4	23.435 lbmass	Door Component Steel Side Bar	100007735	STL ASTM A36 SM-HRPO RAW .250	5.859 lbmass	12
200091877	2	7.269 lbmass	FILLER STRIP	100007735	STL ASTM A36 SM-HRPO RAW .250	3.634 lbmass	13
200091883	1	106.364 lbmass	Door Component Steel Plate, Top Nameplate	100007735	STL ASTM A36 SM-HRPO RAW .250	106.407 lbmass	14
200091885	1	108.411 lbmass	Door Component Steel Plate, Bottom	100007735	STL ASTM A36 SM-HRPO RAW .250	108.411 lbmass	15

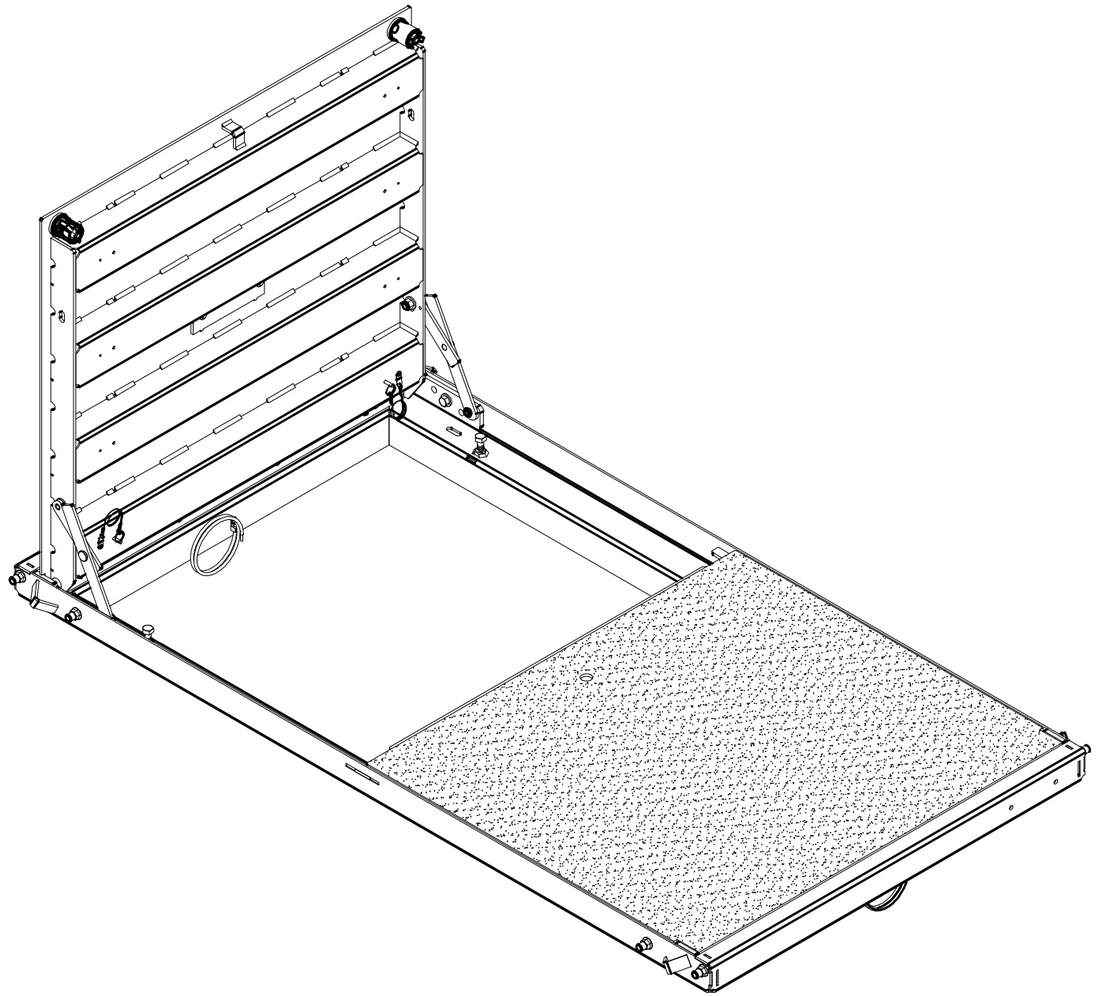

100017385.idw

MATERIAL FINISH: Galvanized

MATERIAL SURFACE: TraxPlate™

Infrastructure JENSEN
527 Dunn Circle, Sparks, NV 89431
775-352-2716 FAX: 755-358-8127
JENSENMETALTECH.COM

©2026 Jensen Infrastructure - All rights reserved.
All materials appearing as Jensen Infrastructure documents and the like are proprietary work product and are protected under U.S. copyright and other laws. Unless in conjunction with business conducted with Jensen Infrastructure , any use of Jensen Infrastructure work product without express, written consent is prohibited, and recipient is prohibited from distributing any and all work product to non-approved third parties under penalty of civil action.
This product shall only be produced in a Jensen Infrastructure facility.

PART NUMBER & DESCRIPTION: 100017385 CAS2-3672-AH4-TRX-G-CL-NVE-OH06

REV: A-2

WEIGHT: 498.48 Lbs

DRAWN BY: R. Dohr

CREATED: 8/5/2024

MODIFIED: 4/13/2026

SHEET: 3

BILL OF MATERIALS

ITEM	ITEM QTY	QTY	PART NUMBER	DESCRIPTION	PART NAME
1	1	1.876 lbmass	100007735	NAME PLATE BACKING PLATE	200091824
2	4	47.020 lbmass	100007840	Door Component Steel Channel	200091852
3	2	11.718 lbmass	100007735	Door Component Steel Side Bar	200091853
4	1	3.634 lbmass	100007735	FILLER STRIP	200091877
5	1	106.364 lbmass	100007735	Door Component Steel Plate, Top Nameplate	200091883
6	2	2	100007970	CAM TOWER CAST STEEL	100007970
7	1	1	100007647	LIFTING BRACKET STEEL LEAF	100007647
8	2	2	100007728	NUT SELF-CLINCH 1/2-13 S-0813-1 RAW	100007728

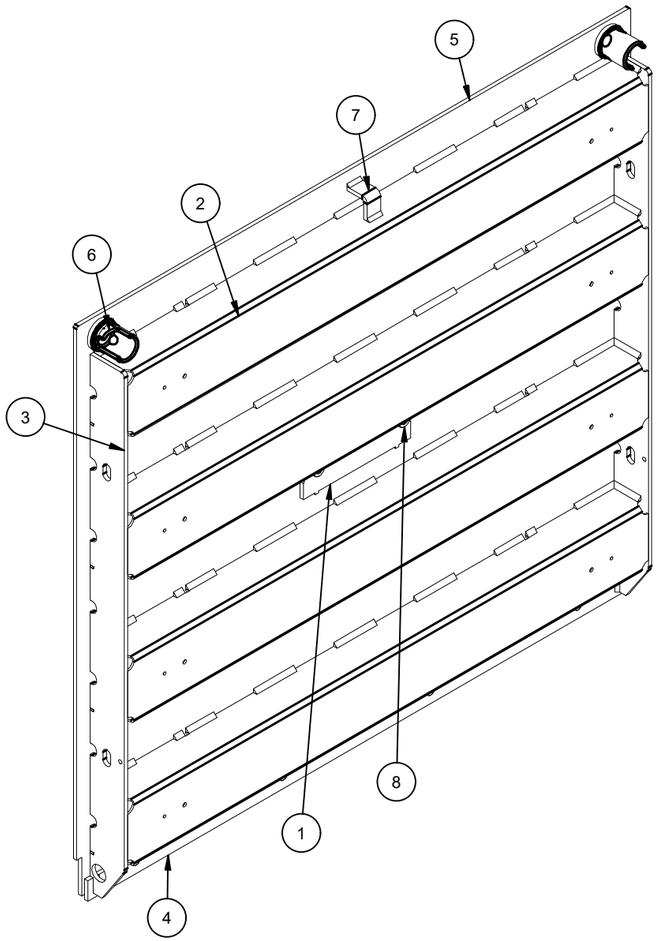

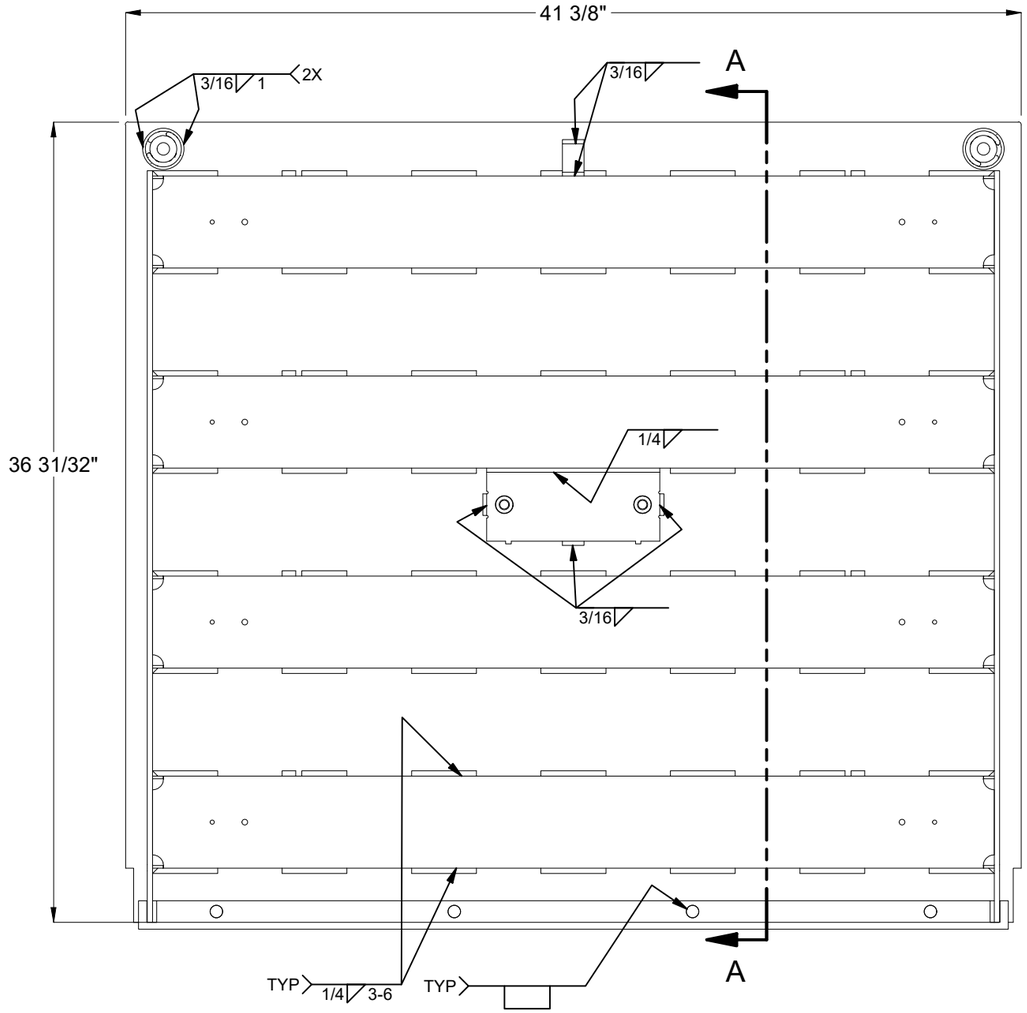

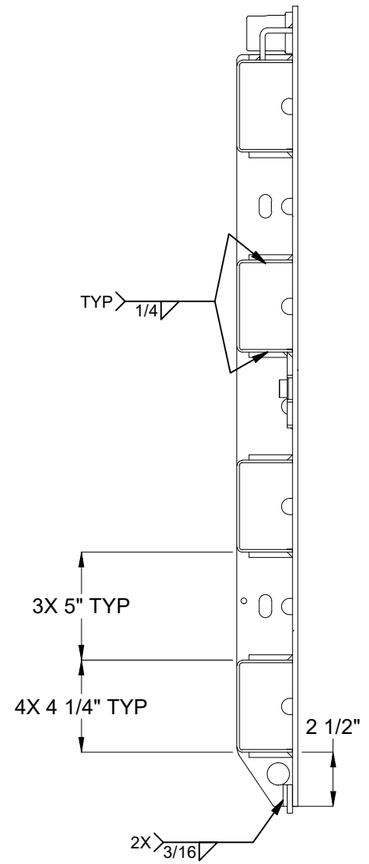

SECTION A-A

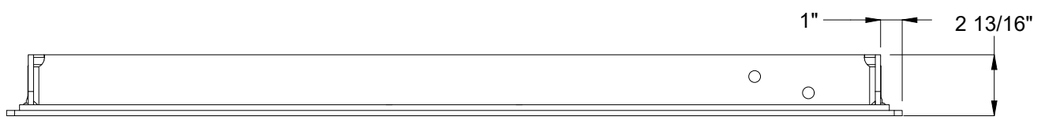

ROBOT DOOR

MATERIAL FINISH: Raw	Infrastructure JENSEN 527 Dunn Circle, Sparks, NV 89431 775-352-2716 FAX: 755-358-8127 *JENSENMETALTECH.COM*	PART NUMBER & DESCRIPTION: 200091882 DAS2-T-3672-H4-TRX-R-CL	REV: A-2
MATERIAL SURFACE: TraxPlate™		WEIGHT: 173.97 Lbs	DRAWN BY: R. Dohr
		CREATED: 8/5/2024	MODIFIED: 4/13/2026
			SHEET: 4

©2026 Jensen Infrastructure - All rights reserved.
All materials appearing as Jensen Infrastructure documents and the like are proprietary work product and are protected under U.S. copyright and other laws. Unless in conjunction with business conducted with Jensen Infrastructure , any use of Jensen Infrastructure work product without express, written consent is prohibited, and recipient is prohibited from distributing any and all work product to non-approved third parties under penalty of civil action.
This product shall only be produced in a Jensen Infrastructure facility.

100017385.idw

BILL OF MATERIALS

ITEM	ITEM QTY	QTY	PART NUMBER	DESCRIPTION	PART NAME
1	1	4.842 lbmass	100007735	Door Component Steel Lap Bar 36in, 2.5" Stiffener Offset	200087246
2	2	11.718 lbmass	100007735	Door Component Steel Side Bar	200091853
3	4	47.020 lbmass	100007840	Door Component Steel Channel	200091852
4	1	3.634 lbmass	100007735	FILLER STRIP	200091877
5	1	108.411 lbmass	100007735	Door Component Steel Plate, Bottom	200091885
6	1	1	100007647	LIFTING BRACKET STEEL LEAF	100007647

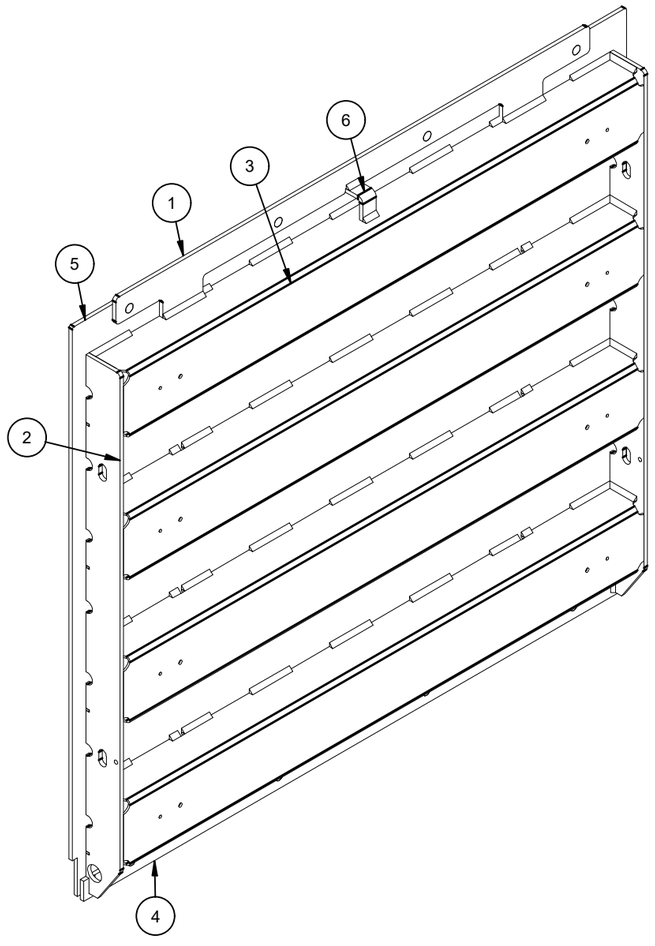

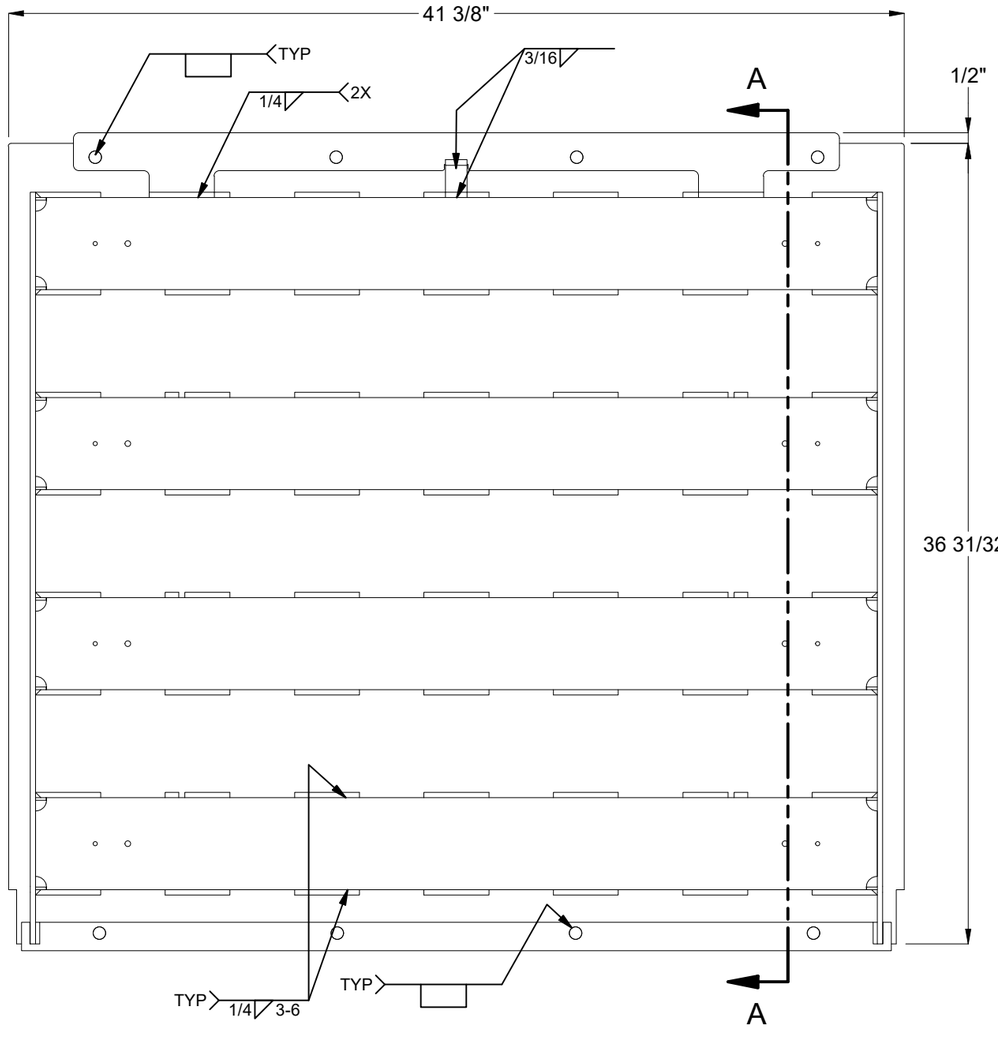

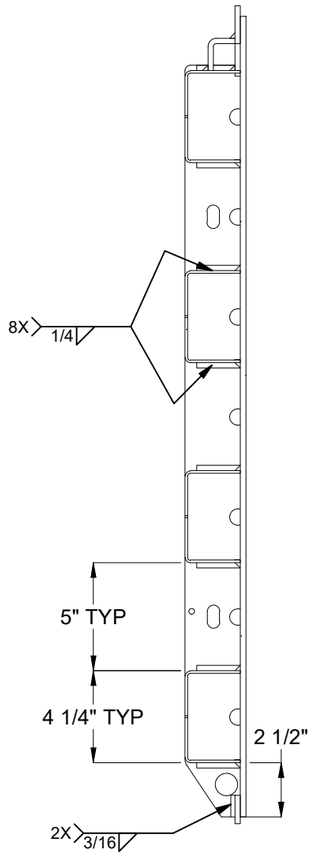

SECTION A-A

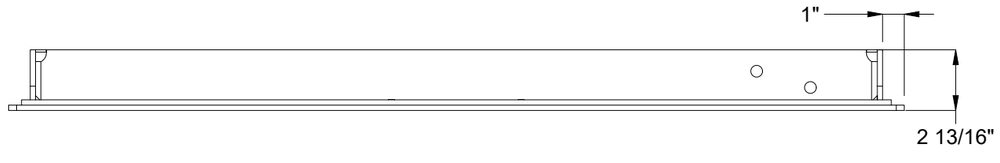

ROBOT DOOR

MATERIAL FINISH: Raw	Infrastructure JENSEN 527 Dunn Circle, Sparks, NV 89431 775-352-2716 FAX: 755-358-8127 *JENSENMETALTECH.COM*	©2026 Jensen Infrastructure - All rights reserved. All materials appearing as Jensen Infrastructure documents and the like are proprietary work product and are protected under U.S. copyright and other laws. Unless in conjunction with business conducted with Jensen Infrastructure , any use of Jensen Infrastructure work product without express, written consent is prohibited, and recipient is prohibited from distributing any and all work product to non-approved third parties under penalty of civil action. This product shall only be produced in a Jensen Infrastructure facility.	PART NUMBER & DESCRIPTION: 200091884 DAS2-B-3672-H4-TRX-R — REV: A-2
MATERIAL SURFACE: TraxPlate™			WEIGHT: 177.77 Lbs — DRAWN BY: R. Dohr — SHEET: 5
			CREATED: 8/5/2024 — MODIFIED: 4/13/2026

100017385.idw

BILL OF MATERIALS

ITEM	ITEM QTY	QTY	PART NUMBER	DESCRIPTION	PART NAME
1	4	4	200018691	FRAME BOLT DOUBLER SLOT	200018691
2	2	71.322 lbmass	100007734	Frame Component Steel Frame Side, Adjustable	200091849
3	2	43.578 lbmass	100007734	Frame Component Steel Frame End, Adjustable	200091850
4	2	2	100007735	Frame Cam Latch Catch Plate - 1/4" A36, Dual Door, 0.8125" Overhang	200100755
5	4	4	100007641	FRAME LIFTING BRACKET	100007641
6	4	4	100007009	HEX COIL NUT 1/2-6 PLAIN	100007009

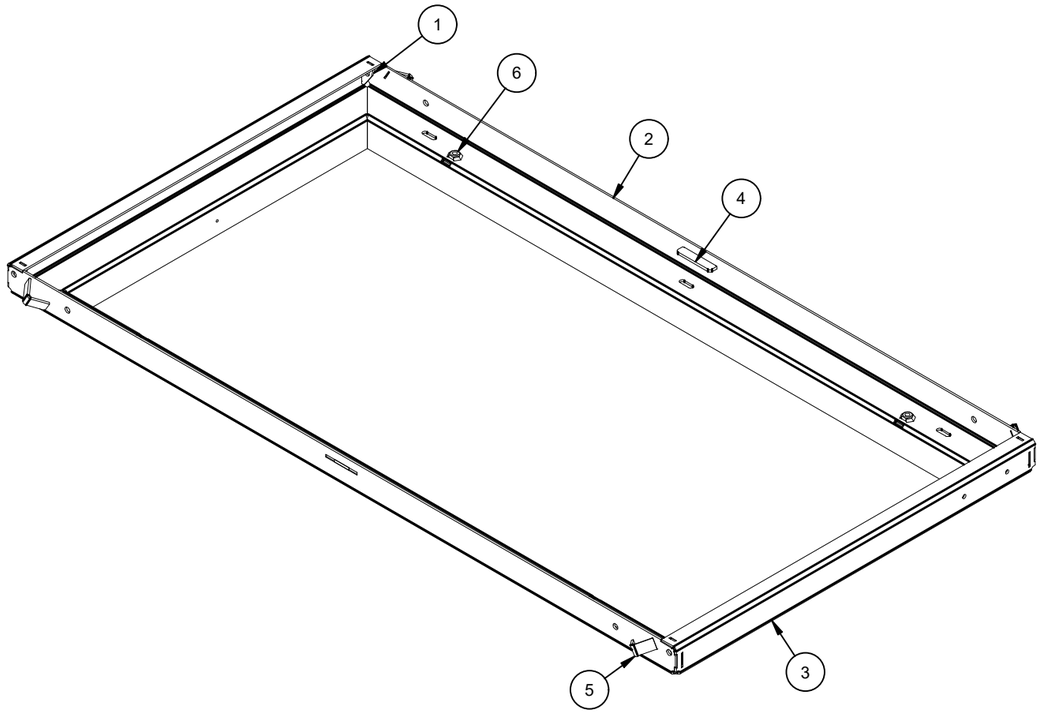

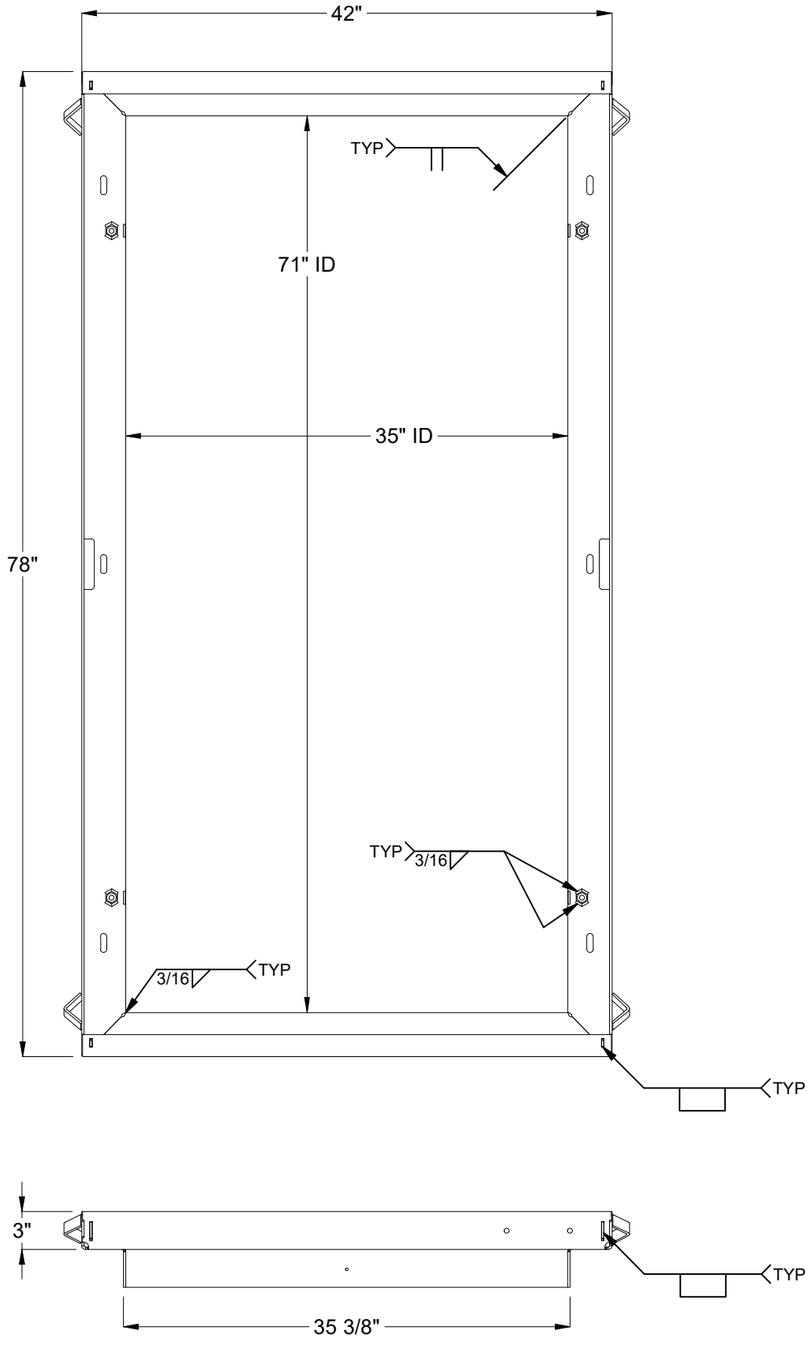

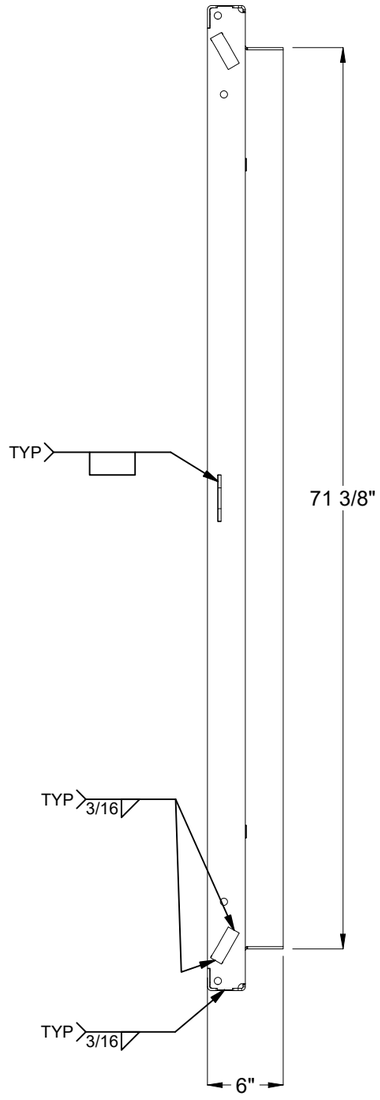

100017385.idw

MATERIAL FINISH: Raw	Infrastructure JENSEN 527 Dunn Circle, Sparks, NV 89431 775-352-2716 FAX: 755-358-8127 *JENSENMETALTECH.COM*	©2026 Jensen Infrastructure - All rights reserved. All materials appearing as Jensen Infrastructure documents and the like are proprietary work product and are protected under U.S. copyright and other laws. Unless in conjunction with business conducted with Jensen Infrastructure , any use of Jensen Infrastructure work product without express, written consent is prohibited, and recipient is prohibited from distributing any and all work product to non-approved third parties under penalty of civil action. This product shall only be produced in a Jensen Infrastructure facility.	PART NUMBER & DESCRIPTION: 200091848 FAS-3672-AH-R-OH06 / REV: A-2
MATERIAL SURFACE: Smooth			WEIGHT: 117 Lbs / DRAWN BY: R. Dohr / SHEET: 6
			CREATED: 8/5/2024 / MODIFIED: 4/13/2026

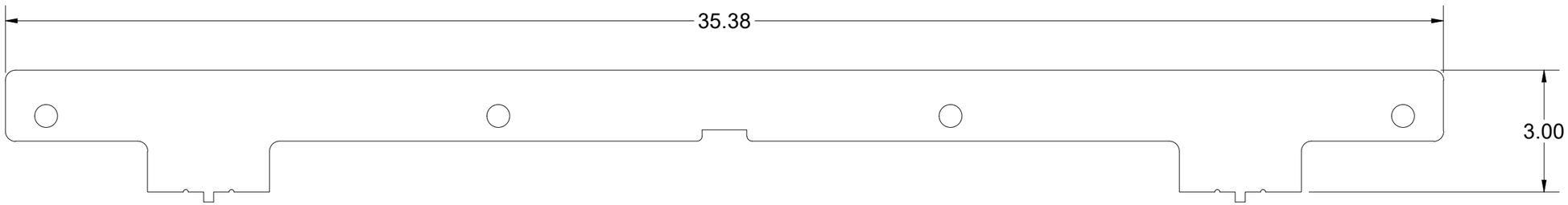

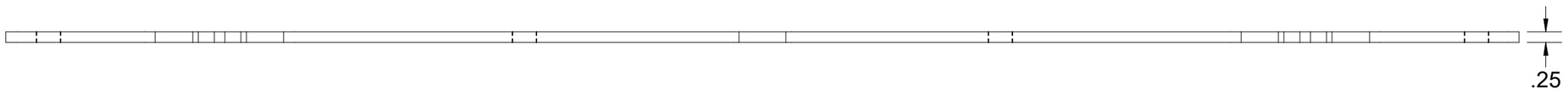

BEND TABLE				MATERIAL IFS: 100007735
BEND RADIUS	V-OPENING	BEND ANGLE	BEND DEDUCTION	MATERIAL THK: 0.25
-	-	- 0	-	MAT DESCRIPTION: STL ASTM A36 SM-HRPO RAW .250

Infrastructure
JENSEN
527 Dunn Circle, Sparks, NV 89431
775-352-2716 FAX: 755-358-8127
JENSENMETALTECH.COM

©2026 Jensen Infrastructure - All rights reserved.
All materials appearing as Jensen Infrastructure documents and the like are proprietary work product and are protected under U.S. copyright and other laws. Unless in conjunction with business conducted with Jensen Infrastructure , any use of Jensen Infrastructure work product without express, written consent is prohibited, and recipient is prohibited from distributing any and all work product to non-approved third parties under penalty of civil action.
This product shall only be produced in a Jensen Infrastructure facility.

NAME & DESCRIPTION:		REV:
200087246 Door Component Steel Lap Bar 36in, 2.5" Stiffener Offset		A-2
WEIGHT: 4.842 lbmass	DRAWN BY: R. Dohr	SHEET: 7 OF 15
CREATED: 8/5/2024	MODIFIED: 4/13/2026	

100017385.idw

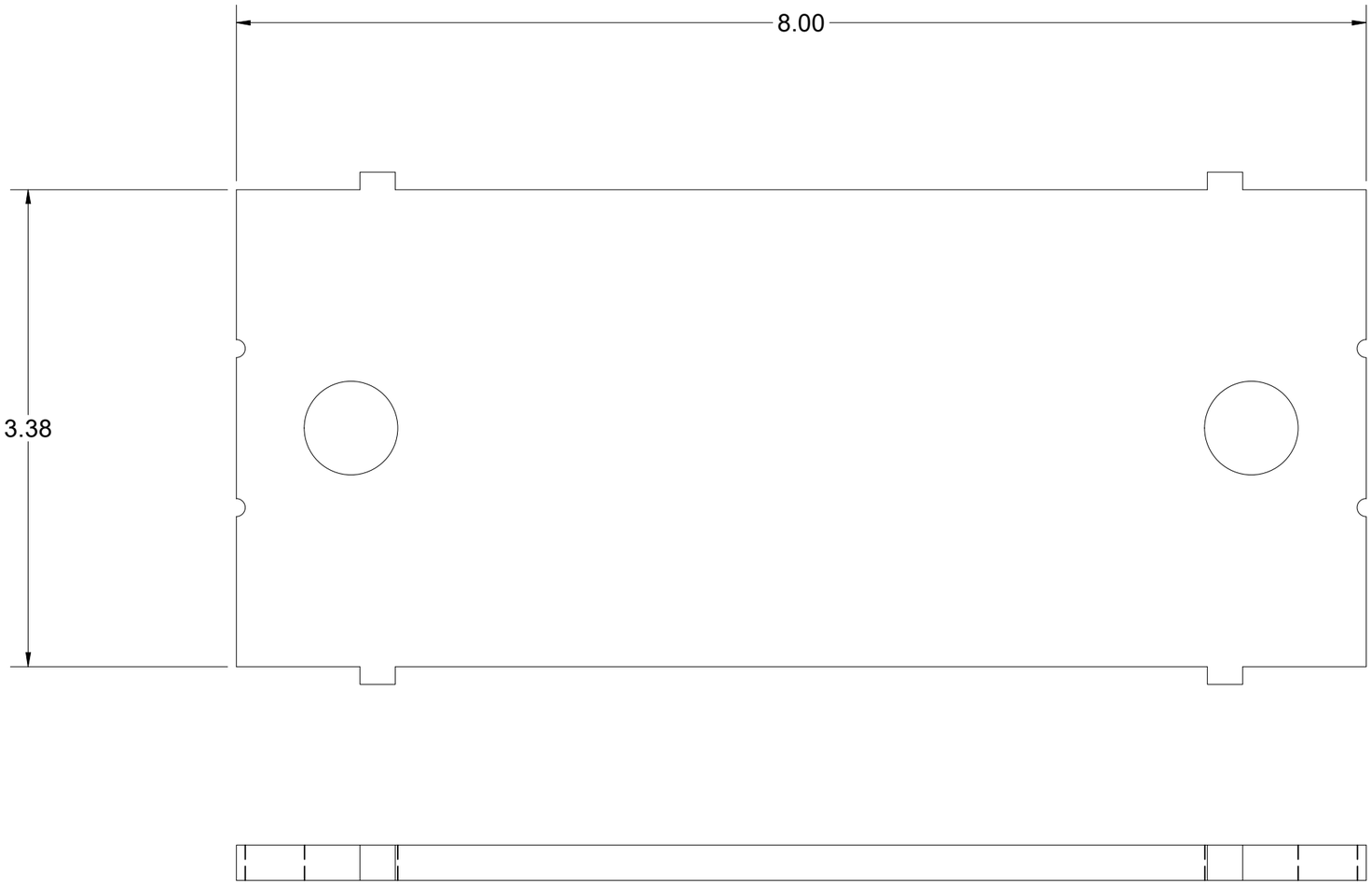

100017385.idw

BEND TABLE				MATERIAL IFS: 100007735
BEND RADIUS	V-OPENING	BEND ANGLE	BEND DEDUCTION	MATERIAL THK: 0.25
-	-	- 0	-	MAT DESCRIPTION: STL ASTM A36 SM-HRPO RAW .250

Infrastructure JENSEN
527 Dunn Circle, Sparks, NV 89431
775-352-2716 FAX: 755-358-8127
JENSENMETALTECH.COM

©2026 Jensen Infrastructure - All rights reserved.
All materials appearing as Jensen Infrastructure documents and the like are proprietary work product and are protected under U.S. copyright and other laws. Unless in conjunction with business conducted with Jensen Infrastructure , any use of Jensen Infrastructure work product without express, written consent is prohibited, and recipient is prohibited from distributing any and all work product to non-approved third parties under penalty of civil action.
This product shall only be produced in a Jensen Infrastructure facility.

NAME & DESCRIPTION:	200091824 NAME PLATE BACKING PLATE	REV: A-2
WEIGHT: 1.876 lbmass	DRAWN BY: R. Dohr	SHEET: 8 OF 15
CREATED: 8/5/2024	MODIFIED: 4/13/2026	

PART IS SYMMETRIC

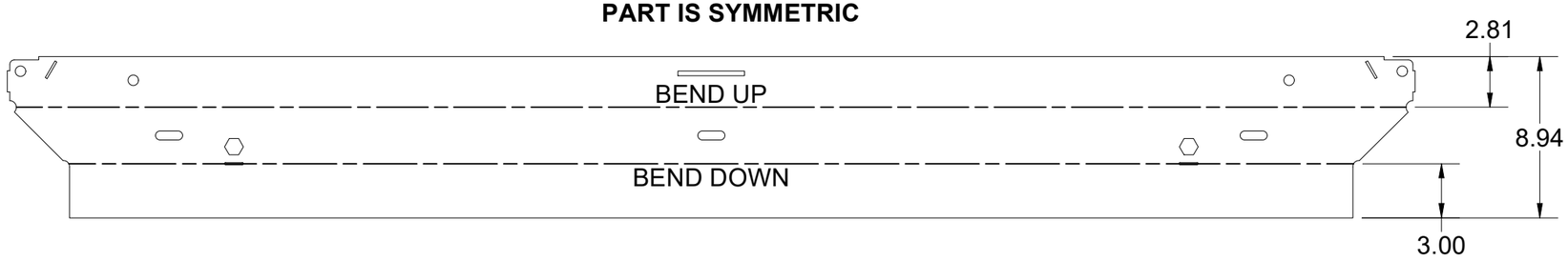

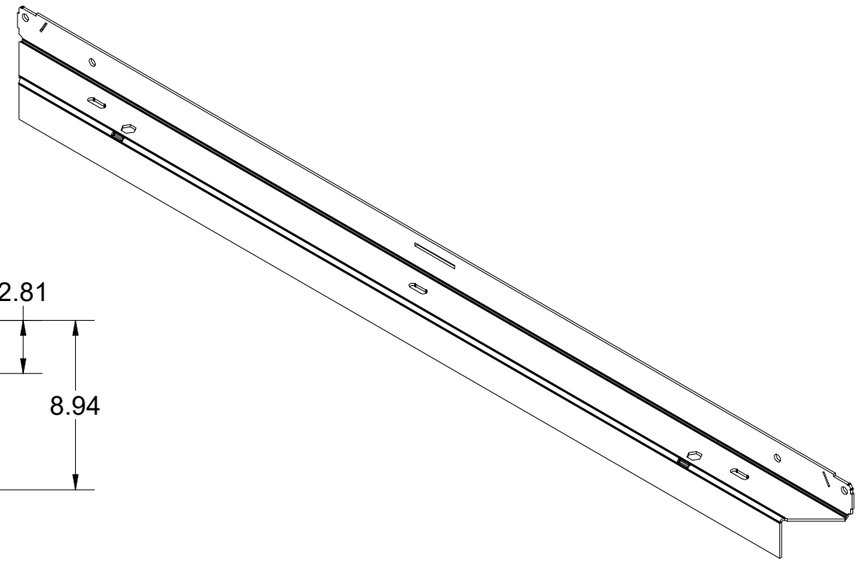

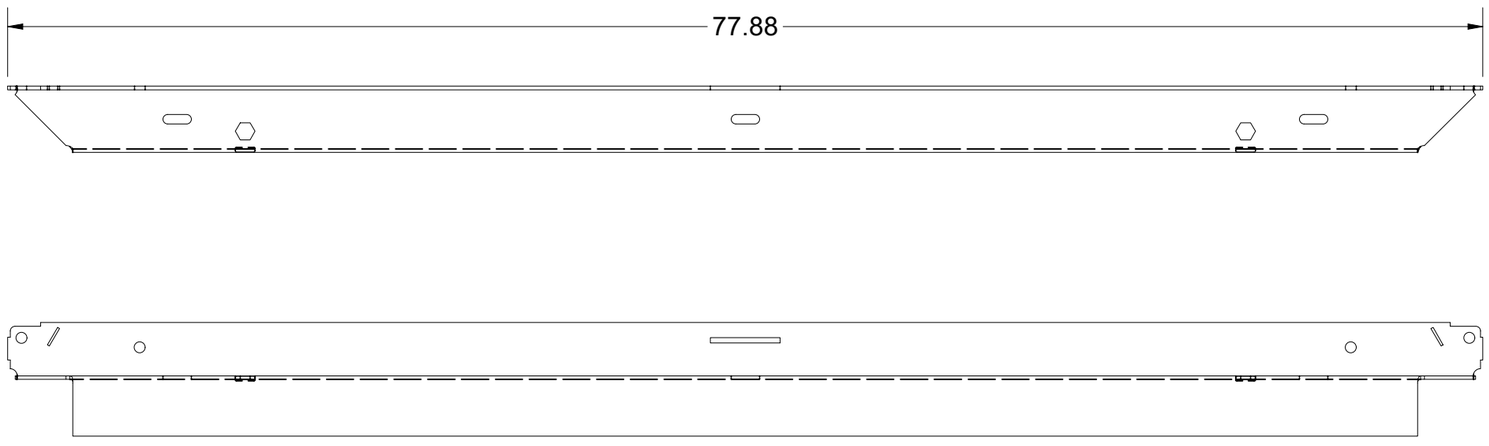

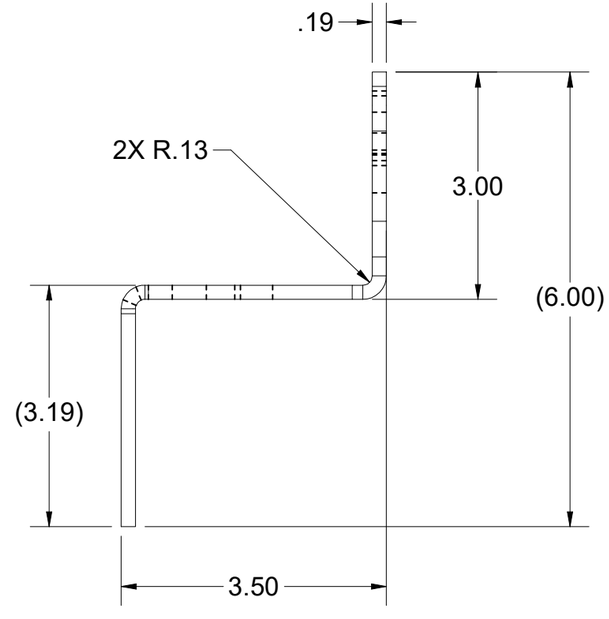

BEND TABLE				MATERIAL IFS: 100007734
BEND RADIUS	V-OPENING	BEND ANGLE	BEND DEDUCTION	MATERIAL THK: 0.1875
0.125	2	90	0.375	MAT DESCRIPTION: STL ASTM A36 SM-HRPO 60X120 RAW .1875

Infrastructure
JENSEN
527 Dunn Circle, Sparks, NV 89431
775-352-2716 FAX: 755-358-8127
JENSENMETALTECH.COM

©2026 Jensen Infrastructure - All rights reserved.
All materials appearing as Jensen Infrastructure documents and the like are proprietary work product and are protected under U.S. copyright and other laws. Unless in conjunction with business conducted with Jensen Infrastructure , any use of Jensen Infrastructure work product without express, written consent is prohibited, and recipient is prohibited from distributing any and all work product to non-approved third parties under penalty of civil action.
This product shall only be produced in a Jensen Infrastructure facility.

NAME & DESCRIPTION: 200091849 Frame Component Steel Frame Side, Adjustable		REV: A-2
WEIGHT: 35.690 lbmass	DRAWN BY: R. Dohr	SHEET: 9 OF 15
CREATED: 8/5/2024	MODIFIED: 4/13/2026	

100017385.idw

PART IS NOT SYMMETRIC

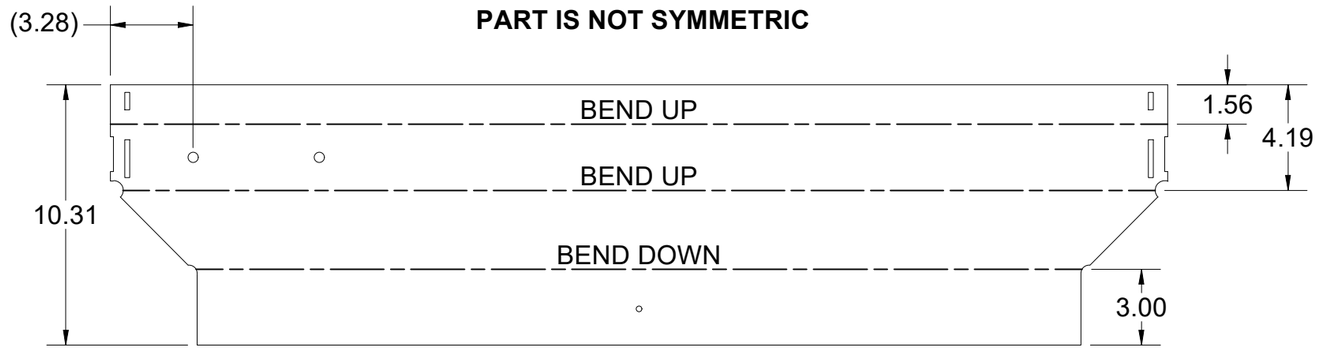

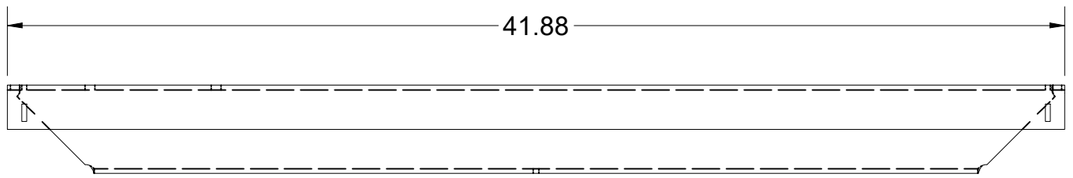

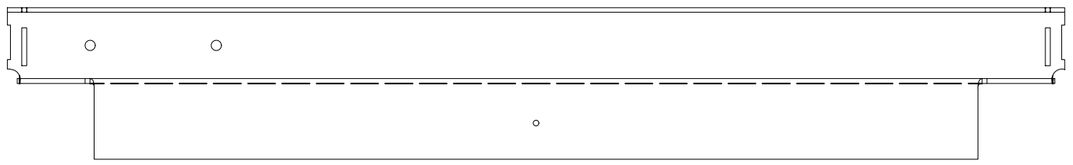

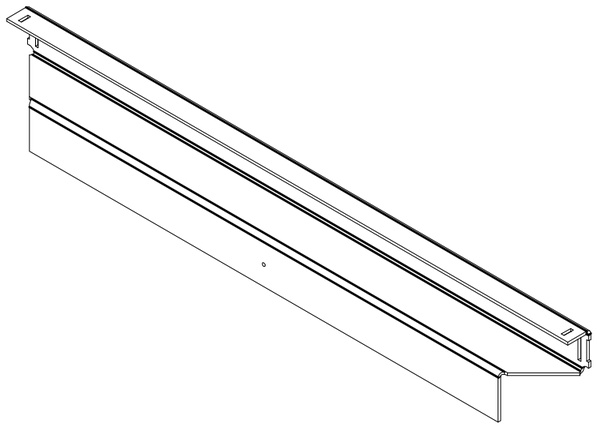

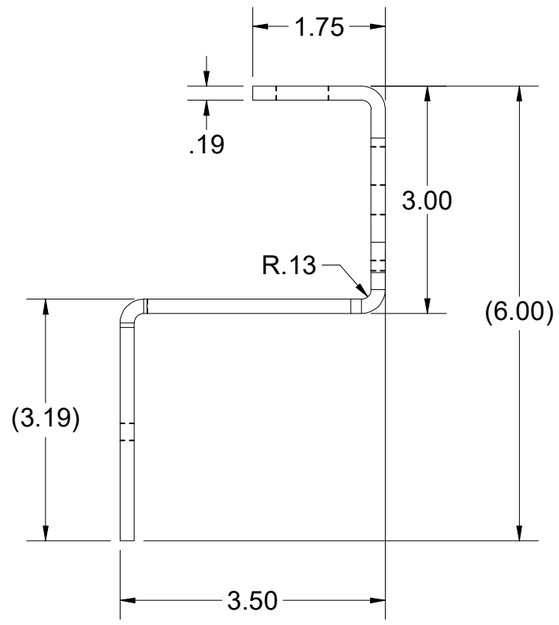

BEND TABLE				MATERIAL IFS: 100007734
BEND RADIUS	V-OPENING	BEND ANGLE	BEND DEDUCTION	MATERIAL THK: 0.1875
0.125	2	90	0.375	MAT DESCRIPTION: STL ASTM A36 SM-HRPO 60X120 RAW .1875

Infrastructure
JENSEN
527 Dunn Circle, Sparks, NV 89431
775-352-2716 FAX: 755-358-8127
JENSENMETALTECH.COM

©2026 Jensen Infrastructure - All rights reserved. All materials appearing as Jensen Infrastructure documents and the like are proprietary work product and are protected under U.S. copyright and other laws. Unless in conjunction with business conducted with Jensen Infrastructure , any use of Jensen Infrastructure work product without express, written consent is prohibited, and recipient is prohibited from distributing any and all work product to non-approved third parties under penalty of civil action. This product shall only be produced in a Jensen Infrastructure facility.

NAME & DESCRIPTION: 200091850 Frame Component Steel Frame End, Adjustable		REV: A-2
WEIGHT: 21.787 lbmass	DRAWN BY: R. Dohr	SHEET: 10 OF 15
CREATED: 8/5/2024	MODIFIED: 4/13/2026	

100017385.idw

PART IS NOT SYMMETRIC

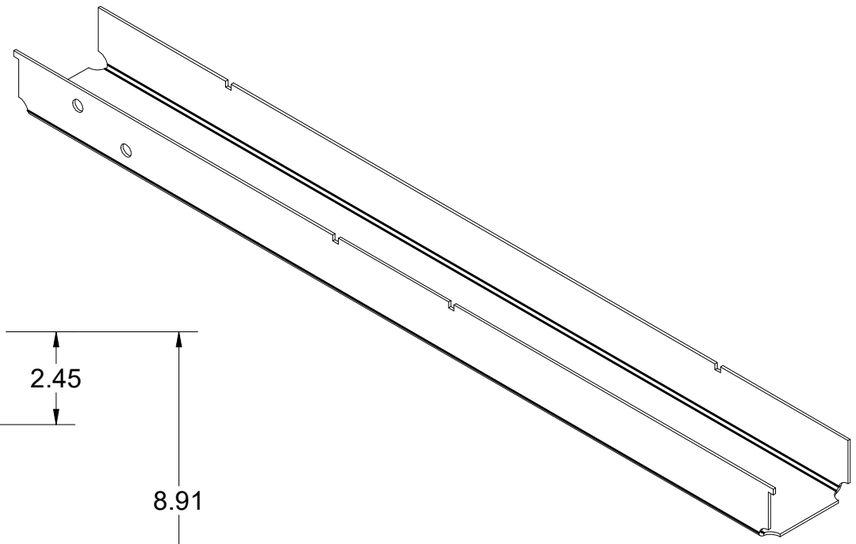

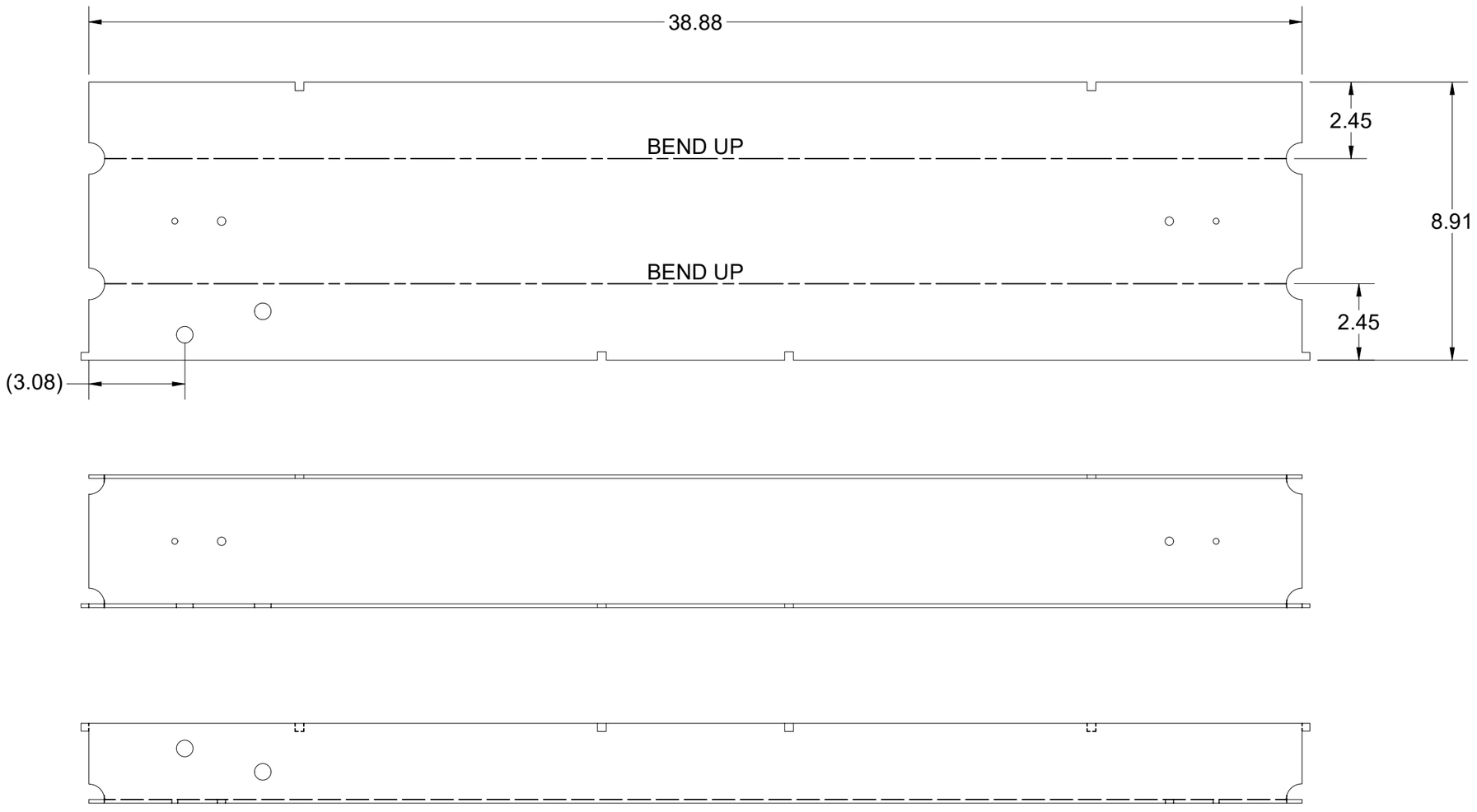

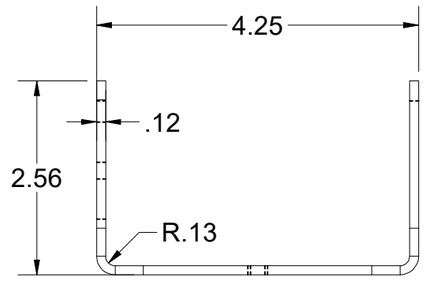

BEND TABLE			
BEND RADIUS	V-OPENING	BEND ANGLE	BEND DEDUCTION
0.125	1	90	0.235

MATERIAL IFS: 100007840

MATERIAL THK: 0.1196

MAT DESCRIPTION: SHT STL GR80 GA-11 SM-HR RAW .1196

Infrastructure JENSEN

527 Dunn Circle, Sparks, NV 89431
775-352-2716 FAX: 755-358-8127
JENSENMETALTECH.COM

©2026 Jensen Infrastructure - All rights reserved.
All materials appearing as Jensen Infrastructure documents and the like are proprietary work product and are protected under U.S. copyright and other laws. Unless in conjunction with business conducted with Jensen Infrastructure , any use of Jensen Infrastructure work product without express, written consent is prohibited, and recipient is prohibited from distributing any and all work product to non-approved third parties under penalty of civil action.
This product shall only be produced in a Jensen Infrastructure facility.

NAME & DESCRIPTION: 200091852 Door Component Steel Channel

REV: A-2

WEIGHT: 11.755 lbmass

DRAWN BY: R. Dohr

CREATED: 8/5/2024

MODIFIED: 4/13/2026

SHEET: 11 OF 15

100017385.idw

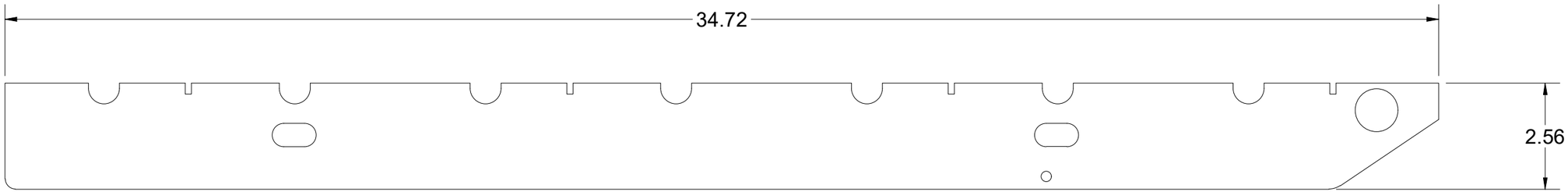



BEND TABLE				MATERIAL IFS: 100007735
BEND RADIUS	V-OPENING	BEND ANGLE	BEND DEDUCTION	MATERIAL THK: 0.25
-	-	-	-	MAT DESCRIPTION: STL ASTM A36 SM-HRPO RAW .250

Infrastructure
JENSEN
527 Dunn Circle, Sparks, NV 89431
775-352-2716 FAX: 755-358-8127
JENSENMETALTECH.COM

©2026 Jensen Infrastructure - All rights reserved.
All materials appearing as Jensen Infrastructure documents and the like are proprietary work product and are protected under U.S. copyright and other laws. Unless in conjunction with business conducted with Jensen Infrastructure , any use of Jensen Infrastructure work product without express, written consent is prohibited, and recipient is prohibited from distributing any and all work product to non-approved third parties under penalty of civil action.
This product shall only be produced in a Jensen Infrastructure facility.

NAME & DESCRIPTION:		REV:
200091853 Door Component Steel Side Bar		A-2
WEIGHT: 5.859 lbmass	DRAWN BY: R. Dohr	SHEET: 12 OF 15
CREATED: 8/5/2024	MODIFIED: 4/13/2026	

100017385.idw

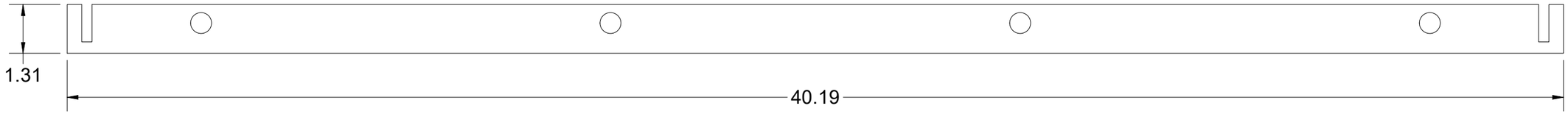



BEND TABLE				MATERIAL IFS: 100007735
BEND RADIUS	V-OPENING	BEND ANGLE	BEND DEDUCTION	MATERIAL THK: 0.25
-	-	- 0	-	MAT DESCRIPTION: STL ASTM A36 SM-HRPO RAW .250

Infrastructure
JENSEN
527 Dunn Circle, Sparks, NV 89431
775-352-2716 FAX: 755-358-8127
JENSENMETALTECH.COM

©2026 Jensen Infrastructure - All rights reserved.
All materials appearing as Jensen Infrastructure documents and the like are proprietary work product and are protected under U.S. copyright and other laws. Unless in conjunction with business conducted with Jensen Infrastructure , any use of Jensen Infrastructure work product without express, written consent is prohibited, and recipient is prohibited from distributing any and all work product to non-approved third parties under penalty of civil action.
This product shall only be produced in a Jensen Infrastructure facility.

NAME & DESCRIPTION: 200091877 FILLER STRIP		REV: A-2
WEIGHT: 3.634 lbmass	DRAWN BY: R. Dohr	SHEET: 13 OF 15
CREATED: 8/5/2024	MODIFIED: 4/13/2026	

100017385.idw

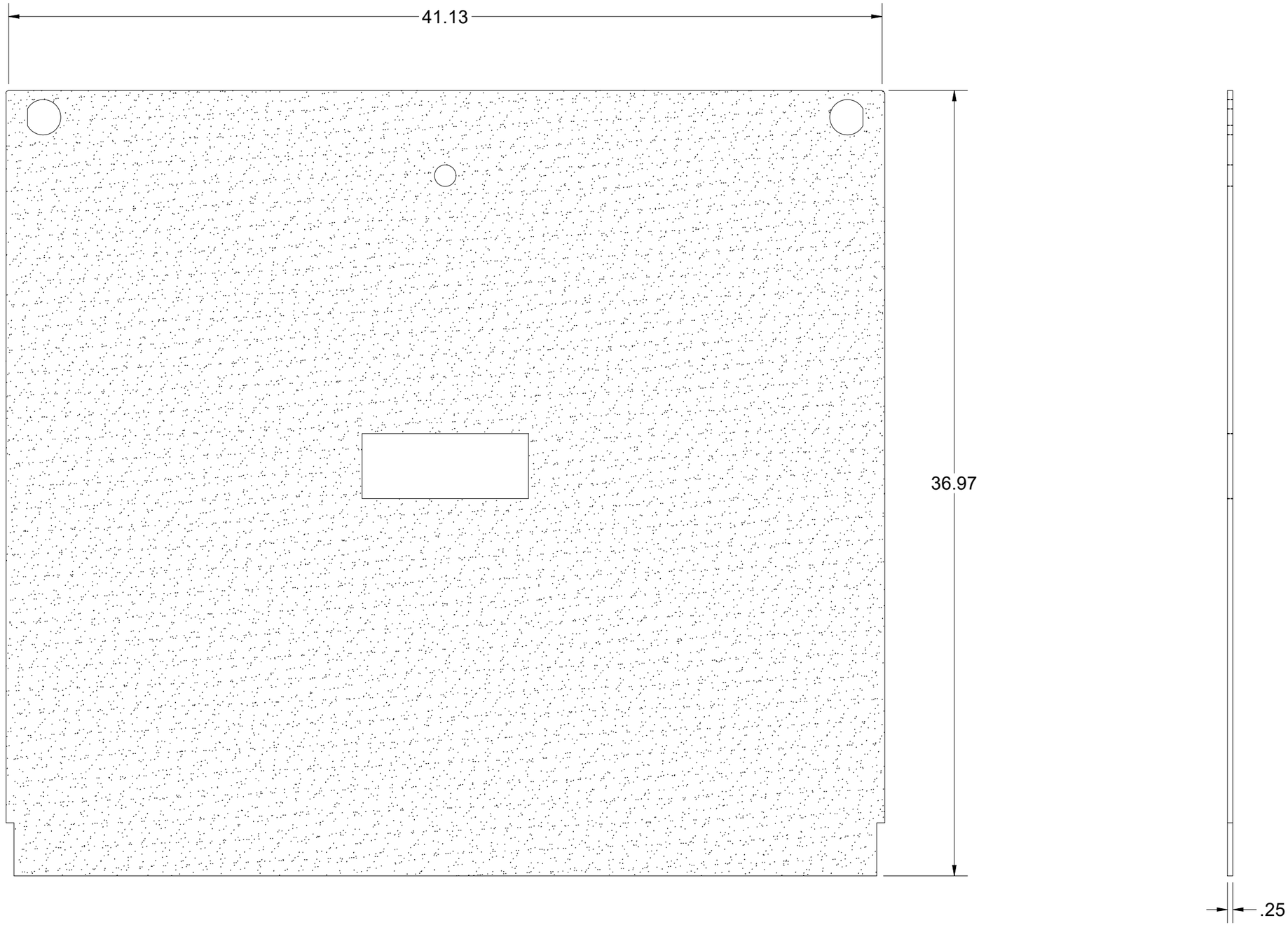

100017385.idw

BEND TABLE				MATERIAL IFS: 100007735
BEND RADIUS	V-OPENING	BEND ANGLE	BEND DEDUCTION	MATERIAL THK: 0.25
-	-	- 0	-	MAT DESCRIPTION: STL ASTM A36 SM-HRPO RAW .250

Infrastructure JENSEN
527 Dunn Circle, Sparks, NV 89431
775-352-2716 FAX: 755-358-8127
JENSENMETALTECH.COM

©2026 Jensen Infrastructure - All rights reserved.
All materials appearing as Jensen Infrastructure documents and the like are proprietary work product and are protected under U.S. copyright and other laws. Unless in conjunction with business conducted with Jensen Infrastructure , any use of Jensen Infrastructure work product without express, written consent is prohibited, and recipient is prohibited from distributing any and all work product to non-approved third parties under penalty of civil action.
This product shall only be produced in a Jensen Infrastructure facility.

NAME & DESCRIPTION:	200091883 Door Component Steel Plate, Top Nameplate	REV: A-2
WEIGHT: 106.407 lbmass	DRAWN BY: R. Dohr	SHEET: 14 OF 15
CREATED: 8/5/2024	MODIFIED: 4/13/2026	

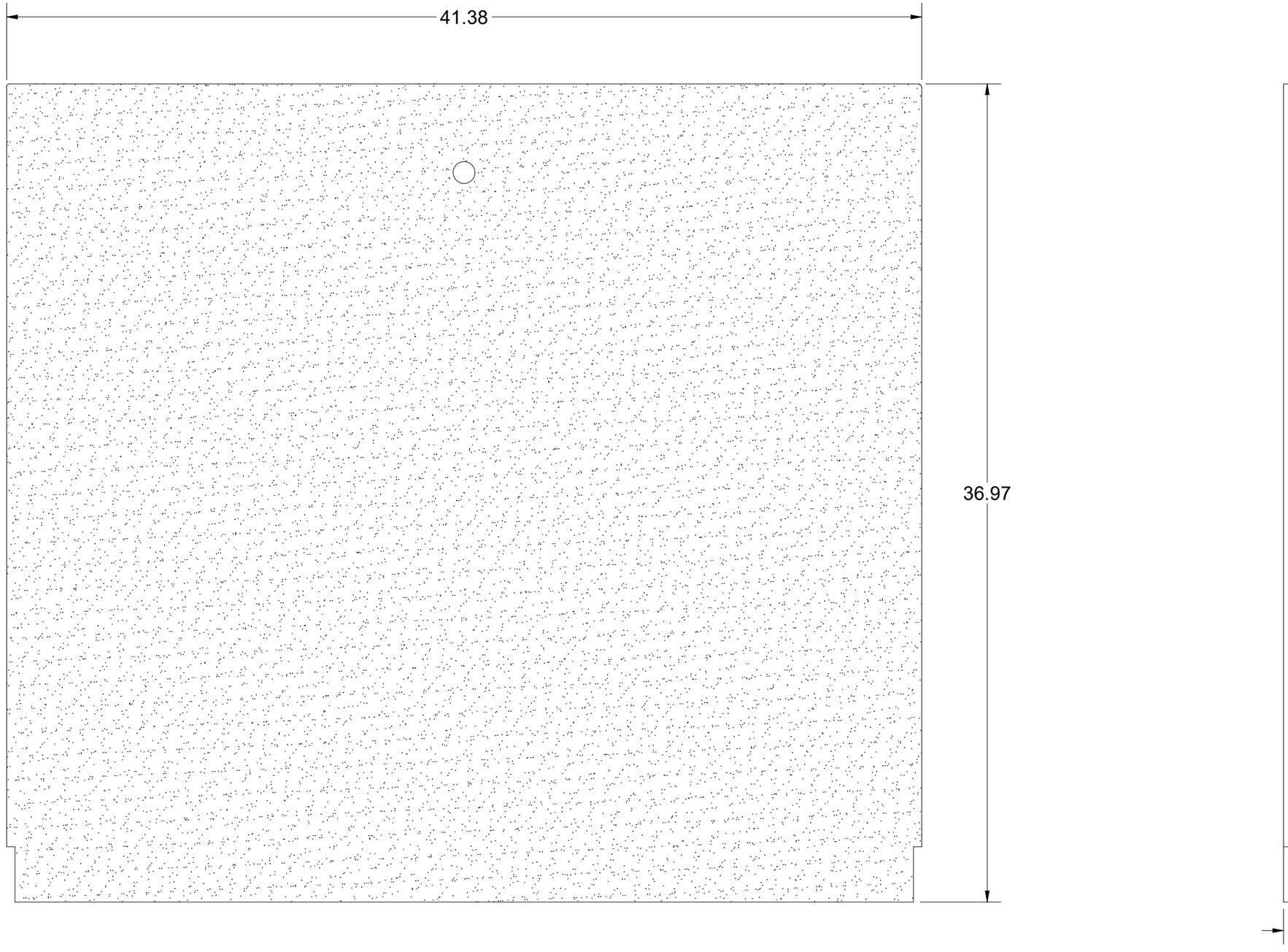

100017385.idw

BEND TABLE				MATERIAL IFS: 100007735			
BEND RADIUS	V-OPENING	BEND ANGLE	BEND DEDUCTION	MATERIAL THK: 0.25			
-	-	- 0	-	MAT DESCRIPTION: STL ASTM A36 SM-HRPO RAW .250			

Infrastructure JENSEN
527 Dunn Circle, Sparks, NV 89431
775-352-2716 FAX: 755-358-8127
JENSENMETALTECH.COM

©2026 Jensen Infrastructure - All rights reserved.
All materials appearing as Jensen Infrastructure documents and the like are proprietary work product and are protected under U.S. copyright and other laws. Unless in conjunction with business conducted with Jensen Infrastructure , any use of Jensen Infrastructure work product without express, written consent is prohibited, and recipient is prohibited from distributing any and all work product to non-approved third parties under penalty of civil action.
This product shall only be produced in a Jensen Infrastructure facility.

NAME & DESCRIPTION: 200091885 Door Component Steel Plate, Bottom		REV: A-2
WEIGHT: 108.411 lbmass	DRAWN BY: R. Dohr	SHEET: 15 OF 15
CREATED: 8/5/2024	MODIFIED: 4/13/2026	